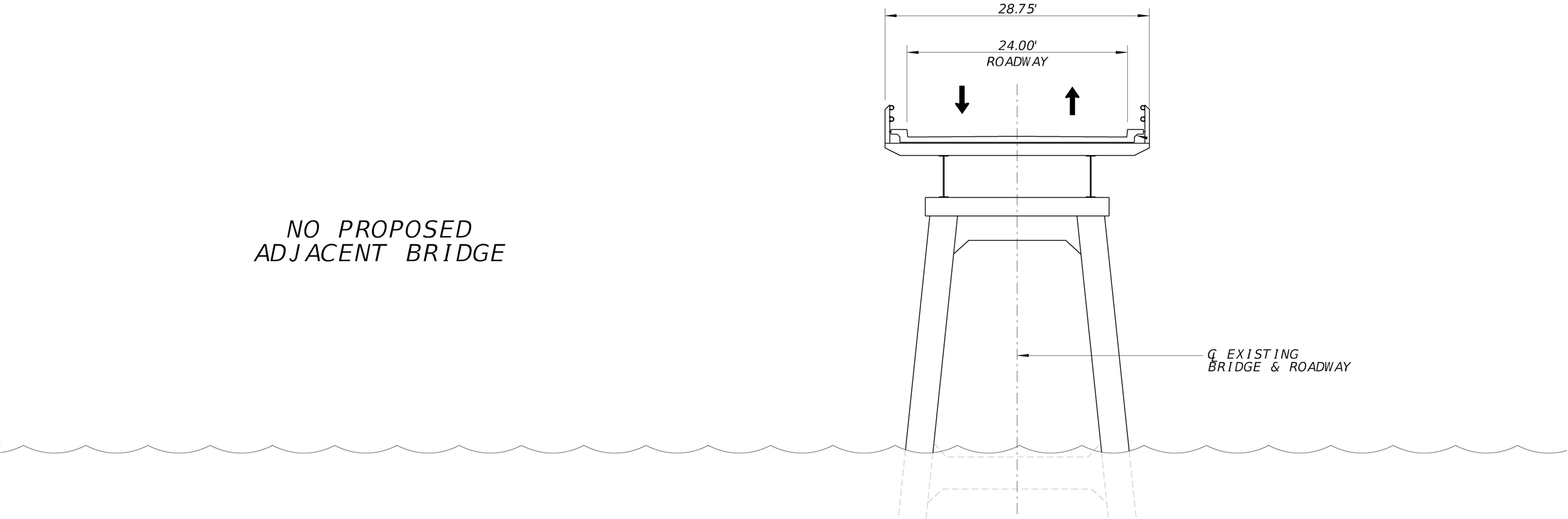
28.75'
24.00'
ROADWAY
NO PROPOSED
ADJACENT BRIDGE
℄ EXISTING
BRIDGE & ROADWAY