GRAND RIVER DAM AUTHORITY

SH 28 BRIDGES OVER PENSACOLA DAM AND AUXILIARY SPILLWAYS

GRDA CONTRACT 41806

ODOT J/P 31884(05)

Mayes County, Oklahoma

NBI No. 27569, 29642 and 29645

Supplemental Report No. 2 to the Preliminary Design Report

BENHAM a Haskell Company

July 11, 2019

Original Report Issued December 2017

Supplemental Report No. 1 Issued July 2018

SUPPLEMENTAL REPORT No. 2

to the

December 22, 2017

PRELIMINARY DESIGN REPORT

And the

July 18, 2018 Supplemental Design Report

SH 28 Bridges over Pensacola Dam and Auxiliary Spillways

ODOT Project Number 31884(05)

GRDA Project Number 41806

Benham Project Number 1400204

Prepared for the

GRAND RIVER DAM AUTHORITY

JULY 11, 2019

PREPARED BY:

REGISTERED PROFESSIONAL ENGINEER
SUSAN OWEN TRYON
15852
OKLAHOMA

7/11/2019

Sue Tryon, PE
Project Manager
Benham Design, LLC
Certificate of Authorization No. 7569 P.E., L.S. Renewal Date 6-30-20

SH 28 Bridges over Pensacola Dam and Auxiliary Spillways

Supplemental Report No. 2 to the Preliminary Design Report

Table of Contents | Supplemental Report No. 2

EXECUTIVE SUMMARY 1
PROJECT DESCRIPTION 3
MAIN SECTIONS OF THE BRIDGES AND DAM 5
LOAD RATINGS AND REHABILITATION MEASURES 7
ENVIRONMENTAL CLEARANCE 11
CONSTRUCTION SEQUENCE AND TRAFFIC CONTROL 18
CONSTRUCTABILITY 19
SUPPLEMENTAL FUNDING EVALUATION 19
SCHEDULE 20

APPENDICES

APPENDIX A	UPDATED WIDENING EXHIBITS
APPENDIX B	UPDATED CONSTRUCTION COST ESTIMATES
APPENDIX C	MATERIALS TESTING
APPENDIX D	LOAD TESTING REPORT
APPENDIX E	UPDATED NEPA STUDY LIMITS
APPENDIX F	UPDATED ALTERNATIVES ANALYSIS
APPENDIX G	ADDITIONAL MEETING MINUTES

LIST OF FIGURES

FIGURE 1 Aerial View of Pensacola Dam and Spillways…….3
FIGURE 2 Existing Roadway Configuration…….4
FIGURE 3 Upstream View Arch Section…….6
FIGURE 4 Downstream View Arch Section…….6
FIGURE 5 Upstream View Spillway Section…….6
FIGURE 6 Downstream View Spillway Section…….6
FIGURE 7 Upstream View Non-Overflow Section…….6
FIGURE 8 Downstream View Non-Overflow Section…….6
FIGURE 9 Load Rating Truck Locations…….8
FIGURE 10 Sensor at Arch Section…….8
FIGURE 11 Environmental Fieldwork June 2019…….12
FIGURE 12 Environmental Fieldwork June 2019…….12

EXECUTIVE SUMMARY

This report supplements the December 2017 Preliminary Design Report and July 2018 Supplemental Report, detailing the decisions made by GRDA in coordination with ODOT, the impact of those decisions, and the direction of the project towards completion. The focus of Supplement No. 2 Report is discussion of the Load Testing Program implemented in November 2018 and the summary of the results. This report also updates the project as impacted by the joint GRDA and ODOT decision to pursue a 2019 BUILD Grant.

The Preliminary Design Report was issued in December 2017. The Preliminary Design Report evaluated the existing condition of the three bridges located on SH 28 over Pensacola Dam and Spillways, and summarized measures that could be taken by GRDA to rehabilitate the structures. The report additionally investigated the possibility of adding approximately 4 feet of clear roadway width to the existing 19'-8" wide driving surface to provide two full 12-foot lanes between curbs. Three scenarios of providing additional width were investigated for feasibility: 1) widening to the downstream side of the bridges, 2) widening to the upstream side of the bridges, and 3) widening to both sides of the bridges. These alternatives were reviewed for constructability, historic preservation and cultural resources aspects, preliminary stability and strength analysis for impacts of widening to the supporting dam, and construction sequence and traffic control. A plan for funding the widening was also included in the report. After consideration of these analyses and recommendations, GRDA selected Widening Alternate 1, widening the bridges to the downstream side, hereafter denoted "widening". Alternate 1 is the most cost-effective means to widen the existing bridges, avoiding impacts to the operations of the dam and spillway gates, and preserving the features observable from the lake. See Appendix A for current widening exhibits.

GRDA's widening and rehabilitation project pairs well with a deck rehabilitation project that ODOT is undertaking on the same three bridges. Upon further discussion, GRDA and ODOT agreed to proceed with the two projects remaining as separate plans but bid jointly under ODOT's letting system as mandatory tied projects. Tying the projects together minimizes impacts to the highway users and communities as well as minimizing costs. The two agencies hosted a Stakeholder meeting held in October 2017, to present the initial plan for rehabilitation and widening, and to better understand the needs and concerns of the adjoining communities.

The July 2018 Supplemental Report documented joint decisions by GRDA, ODOT and Benham Design relating to calculated load ratings of the arch section and the resulting design effects on the project. These decisions resulted in two primary measures to improve the strength of the bridge: the addition of "sister" floor beams and carbon fiber reinforced polymer (CFRP) strengthening of various bridge components. Based on the 1995 load rating calculations, a coordination meeting was held in January 2018 regarding concerns about the extent of deck deterioration and how to mitigate and plan for the potential effects of advanced deterioration on

the two projects. Preliminary 30% and 60% plans for the rehabilitation and widening were prepared and reviewed jointly by GRDA and ODOT in the spring of 2018. Between these two submittals, ODOT arranged for a hydrodemolition and overlay expert to visit the site and to present the recommended process to GRDA, ODOT and the consultants preparing the plans. Following this meeting, GRDA and ODOT concurred that the sequence of construction and rehabilitation should be widening first, followed by mill and hydrodemolition of the existing and new deck to properly prepare both surfaces for a latex modified overlay. Further, the mile-long Pensacola Dam Bridge will be closed for 9 months during the season between Labor Day and Memorial Day to minimize impacts to the communities and their revenue. The remainder of construction duration was anticipated to be completed with a minimum of one lane open at all times. Minutes from these meetings are included in the July 2018 supplemental report. Comments from these meetings were incorporated into a set of 60% Rehabilitation and Widening Plans, issued June 29, 2018.

Since the June and July 2018 submittals, additional load rating calculations were conducted as well as a live load static load testing program, implemented in November 2018. As a result of the Load Testing Program, GRDA and ODOT have agreed to raise the strength of the bridge to 36 tons by replacing all 102 hinges on the upstream side of the arch section of the Pensacola Dam Bridge, and to adding Carbon Fiber Reinforcing Polymer to the existing floor beams at the arch section and non-overflow section. The agencies concur that semi-trailer loads of 45 tons are not desirable for the bridge, and the bridge capacity will not be raised to accommodate those loads. This is further detailed in the body of this report.

Generally, portions of the December 2017 and the July 2018 supplemental report that are still current are not included in this supplemental report; however, the “Project Description” and “Description of the Main Sections of the Bridges and Dam” with minor updates are included for convenience.

PROJECT DESCRIPTION

The purpose of this project is to extend the life of three bridges located on SH 28 over the Grand Neosho River in Mayes County, Oklahoma. The bridge structures cross the Pensacola Dam and the West and East Spillways, which were constructed in 1940. Rehabilitation and strengthening are needed for the bridges to continue serving the needs of the Grand River Dam Authority (GRDA), the Oklahoma Department of Transportation (ODOT), and the adjoining communities. GRDA and ODOT are committed to restoring the integrity of the aging structures and are coordinating efforts to minimize the impacts of the rehabilitation to the stakeholders.

Figure 1 shows the site and location of the three bridges, the Pensacola Dam Bridge and the West and East Spillway Bridges. The Pensacola Dam Bridge is shown in red and is divided into three distinct sections: the Arch Section, the Main Spillway Section, and the Non-Overflow Section. The overall length of the Pensacola Dam Bridge is 5679 feet. The West and East Spillway bridges are shown below in orange, and extend 451 feet and 410 feet in length, respectively. The West and East Spillway Bridges are similar in nature to the Main Spillway Section of the Pensacola Dam Bridge but are not as tall.

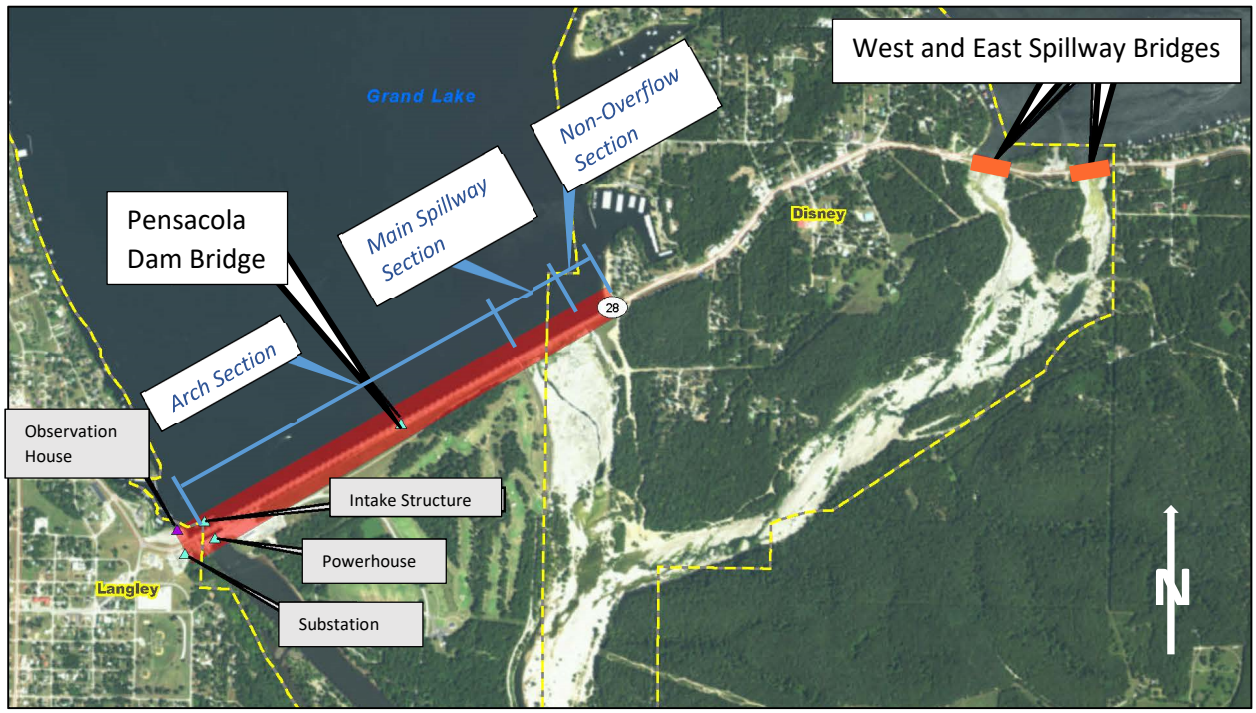

Figure 1. Aerial View of Pensacola Dam and Spillways

GRDA and ODOT share responsibility for the maintenance of the three bridges. ODOT maintains the driving surface of the bridges between the curbs. GRDA owns and maintains the remainder of the bridges, dam, and spillways; and is responsible for operating the hydroelectric powerhouse.

GRDA and ODOT have designated funds for the rehabilitation of the three bridges, with construction scheduled for September 2020. GRDA has allocated $10 million for the bridge rehabilitation project, and ODOT has programmed $5 million for deck rehabilitation. A BUILD Grant request is being made for $15.2 million for widening the three structures.

As shown in Figure 2, the existing lanes are 9'-10" wide, for a roadway width of 19'-8". The agencies desire to widen the roadway surface of the three bridges to 24' wide if suitable grant(s) or other funding mechanisms can be acquired to finance the widening. Updated Detailed Construction Cost Estimates for Widening and Rehabilitation, and for Rehabilitation only, are provided in Appendix B.

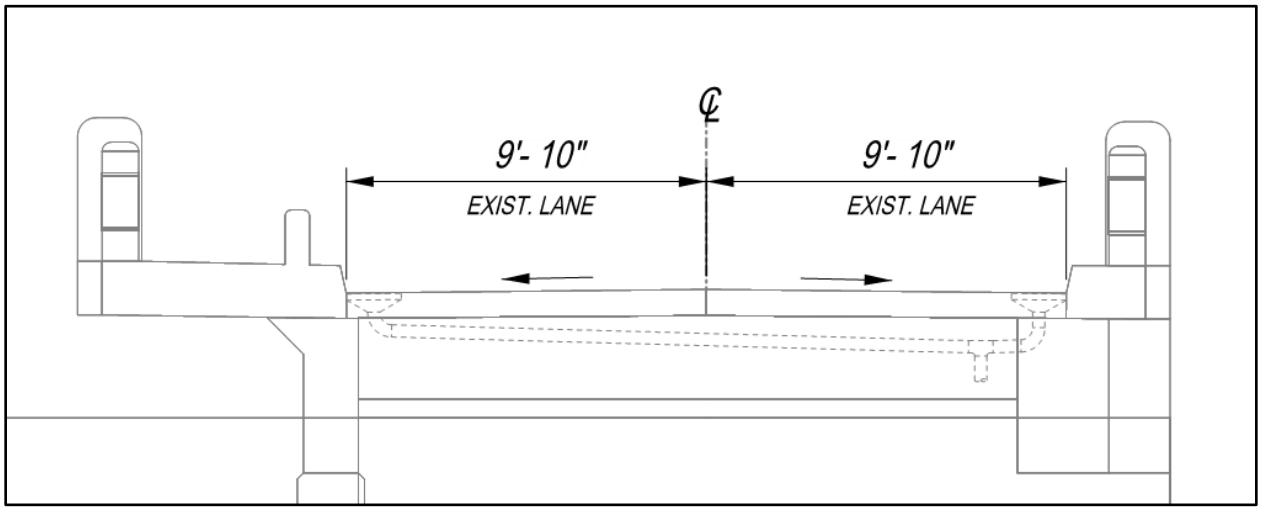

Figure 2. Existing Roadway Configuration

MAIN SECTIONS OF THE BRIDGES AND DAM

The Pensacola Dam Bridge and the West and East Spillway Bridges cross the Pensacola Dam and Auxiliary Spillways. The Dam includes a hydroelectric powerhouse at the west end, which supplies electricity to Northeastern Oklahoma. The intake structure for the powerhouse takes water from the lake through the arch structures and into the powerhouse. The spillway sections are used to control the lake level for both recreational use of the lake and flood control on the Grand Neosho River system.

Working from west to east, the Pensacola Dam Bridge is identified by three primary sections based on the dam features:

- ***Arch Section***. Arches and buttresses form the dam, with the arch barrels extending into the lake. The tops of the arches are visible on the right side of Figure 3, shown on the next page. The intake structure is located on the far-left side of Figure 3. The downstream sides of the arches and buttresses are shown in Figure 4. The bridge's distinctive spandrel arch which supports the downstream side of the bridge is also visible.
- ***Main Spillway Section***. The upstream and downstream views of the main spillway are shown in Figures 5 and 6, respectively. The bridge is supported by piers extending upwards through the main spillway. The Hoist Bridge is shown on the upstream side of Figure 5. The Hoist Bridge provides access to open and close the spillway gates and to lower stoplogs into slots to allow spillway and gate maintenance.
- ***Non-Overflow Section***. A gravity dam forms the east end of the dam. The bridge is supported by the gravity dam on the upstream side, and by piers extending up from the gravity dam on the downstream side. See Figures 7 and 8, respectively.

The West and East Spillway Bridges have the same configuration as the Main Spillway Section of the Pensacola Dam Bridge.

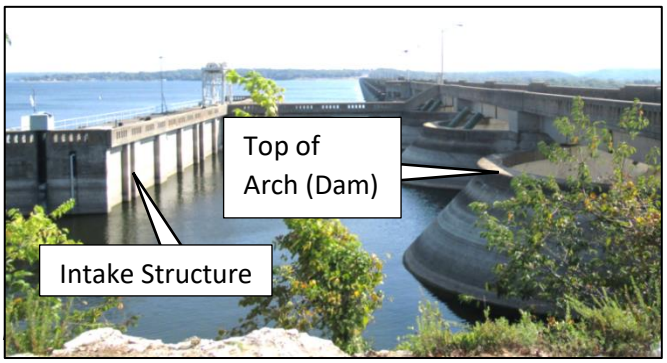

Figure 3. Upstream View Arch Section

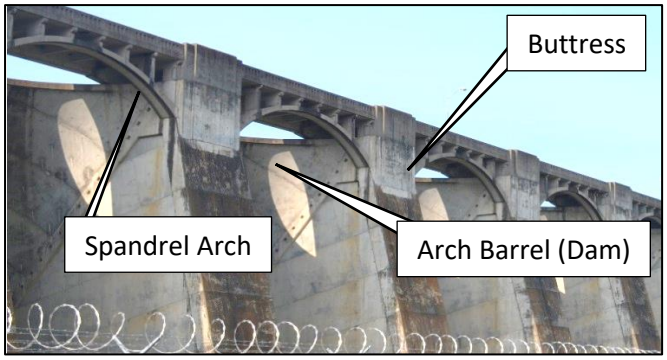

Figure 4. Downstream View Arch Section

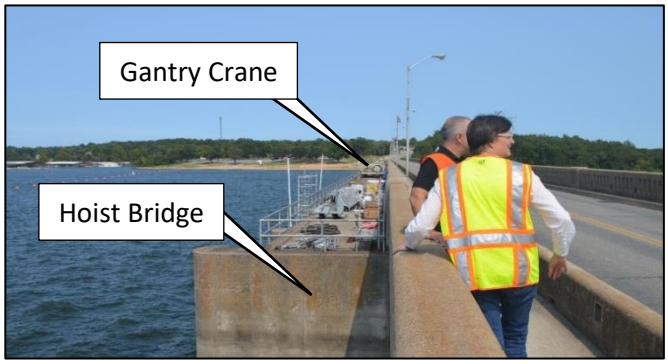

Figure 5. Upstream View Spillway Section

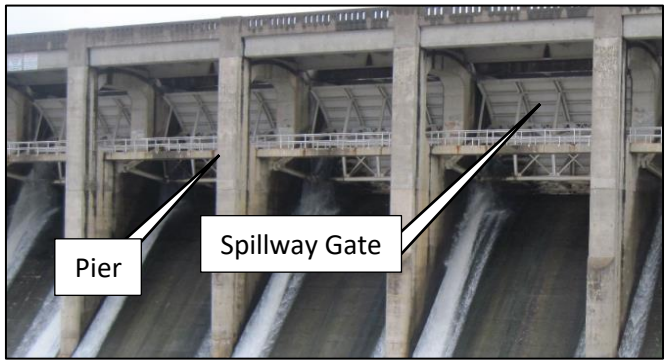

Figure 6. Downstream View Spillway Section

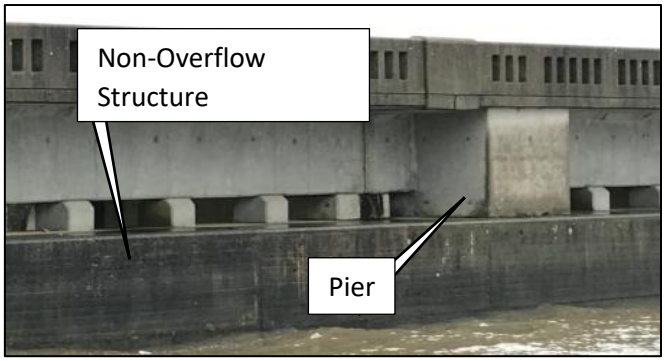

Figure 7. Upstream View Non-Overflow Section

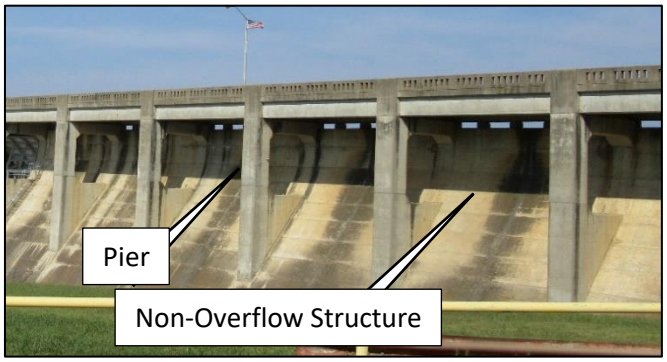

Figure 8. Downstream View Non-Overflow Section

LOAD RATINGS AND REHABILITATION MEASURES

The bridges were originally designed for an H15 or an H20 truck, which is a two-axle truck weighing a total of 15 or 20 tons, respectively. Based on 1995 calculations, the bridges are load posted for 16-tons for a single two- axle truck, 29-tons for a single trailer (three axle truck), and 45-tons for double trailer units. The 1995 load ratings addressed the design of only the arch section of the bridge, showing these decks control the load rating of the bridges at 16.4 tons. The required operating rating to remove the load posting is 23 tons.

For the rehabilitation program, the primary method to increase the strength of existing members is to utilize carbon fiber reinforced polymer (CFRP). In order to have a more accurate account of the CFRP quantity needed, additional load rating calculations were prepared in June 2018 (resulting in the July 2018 Supplemental Design Report). Differences between the arch sections' span lengths, spacing of floor beams, and types of longitudinal girders resulted in higher operating ratings compared to the spillway and non-overflow portions of the bridge. Specifically, the load rating for moment for the floor beams in the spillway and non-overflow sections is 13.3 tons.

Since the completion of the July 2018 Supplemental Report, additional truck combinations were also applied to the structures at the request of ODOT's Bridge Division, the EV-3 and Type 3-3 truck, resulting in a calculated rating of 12.4 tons for the floor beams for moment, 13.7 tons for the deck in positive moment and 15.3 tons in negative moment. The spillway and non-overflow sections controlled the ratings.

In contrast to the load rating values, the majority of the bridge members do not exhibit significant distress, other than the deterioration of the hinges in the upstream longitudinal girder of the arch section and deterioration of floor beams located at deck joints at all sections. The bridge is observed to carry dump trucks, concrete trucks, and other loads over the posted limit, however, the bridge does not exhibit the anticipated corresponding distress from such loads.

The concrete members typically exhibit small evenly-spaced flexural cracks, as is anticipated with reinforced concrete design. Part of the explanation of this may be that the load distribution among members are allowing the bridge to behave in a more complex manner than the simplifying and conservative assumptions made in the calculations. Additionally, although heavy trucks regularly cross this bridge, their speed is often reduced, and may result in lower impact forces on the bridge than are used in the calculations.

In an attempt to increase the calculated load ratings, materials testing of concrete and reinforcing steel was performed. Two concrete specimens tested between 2900 and 3000 psi, resulting in a reduction in concrete compressive strength from the 4000 psi used in the initial load rating computations to 2500 psi. While these tests were informative, they ultimately did not help increase the load ratings. See Appendix C for the Materials Testing Reports.

With the additional, heavier trucks used in the load rating calculations, combined with the lower allowable material strengths, GRDA was facing several million dollars in costs for CFRP or other additional strengthening without the added benefit of being able to significantly raise the load rating of the bridge. Therefore, discussions for a different method to load rate the bridge began; resulting in the decision to perform load testing using strain gages and a truck of known weight in accordance with the Manual For Bridge Evaluation procedures.

In November 2018, the Load Testing plan conducted static load tests on each of the three sections of the Pensacola Dam Bridge. Strain gauges were placed on the various members on the underside of the bridge, and trucks of known axle loads were stopped at key locations to allow capture of the strain data, as shown in Figures 9 and 10. These strains were then used to calibrate 3-D structural models to match the load testing results. Following the calibration, the models are used to determine the capacity of the bridge to carry various load rating trucks including the HS20 truck weighing 36 tons, the Type 3-3 truck weighing 40 tons, and the EV-3 truck weighing 43 tons.

The load testing analysis demonstrates that the bridge carries the HS20 and Type 3-3 trucks satisfactorily. The bridge does not have sufficient capacity to accommodate the 43-ton EV3 truck without significant strengthening of the floor beams for shear, and certain floor beams within the arch section for moment.

Figure 9. Load Rating Truck Locations

Figure 10. Sensor at Arch Section

The bridge deck is more difficult to model but did not exhibit large strains when loaded with the 27-ton truck. Calculations were prepared for the deck using conventional distribution factors, which indicated the deck would likewise require strengthening to accommodate the HS20 and EV3 trucks. However, these distribution factors and subsequent ratings are recognized to be conservative and incongruent with the observed condition of the underside of the deck.

The hinges show the most signs of deterioration of all the bridge components. Although their load ratings are more than adequate at 46.3 tons and 43.7 tons for moment and shear, respectively, the girders exhibit shear cracks at the hinges, indicating the hinges are not performing well under current loads, and may be affected by temperature loads. Some of these hinges have been repaired in past rehabilitation projects. Contributing factors to the deterioration include the following:

- The girders are located on the north and upstream side of the bridge. The proximity to the lake combined with the moisture typical on the north side of a structure increase deterioration.
- The hinges are located beneath the deck joints. While ODOT and GRDA have not salted these bridges for snow and ice since the mid-1990's, the moisture seeping through the joints accumulates at the hinges. The tightness of the hinge components traps moisture and prevents drying from the wind and sun.
- Some vehicles currently using the bridges exceed the posted load limits. Enforcement of load limit signage is limited at best.
- The differential load mechanism and stiffness of the upstream hinged continuous longitudinal girder compared to the spandrel arch beams may be a contributing factor.
- The thermal movement is currently transmitted through a thin asbestos pad, which is now nearing 80 years old.

The proposed rehabilitation for the hinges centers on supporting the longitudinal girders while cutting back to sound material. Existing reinforcing will be salvaged and augmented with new reinforcing where needed. The section will be rebuilt, including an elastomeric bearing pad with steel guides in lieu of the asbestos pad.

Upon further review of the load testing analysis and consideration of the bridges' lack of distress under 33 to 36-ton trucks using the bridge daily, ODOT and GRDA have agreed to raising the load limit of the bridge to 36 tons after rehabilitation. The agencies concur that strengthening the bridge to accommodate the EV3 truck would encourage semi-trailers to begin using the bridge, which is undesirable. Other rehabilitation efforts will concentrate on replacing all 102 hinges on the upstream longitudinal girder and repairing spalls and cracks as necessary. Minimal CFRP strengthening efforts of floor beams at the arch and non-overflow sections for shear and arch

spandrel columns at joints will be included in the rehabilitation design. After rehabilitation, the load posting increases to 36 tons.

The updated cost estimates in Appendix B include the costs of hinge replacement, CFRP for shear as appropriate in the floor beams and in spandrel columns at joints, as well as epoxy injection and pneumatic mortar repair for normal cracks and spalls. Application of these measures will strengthen the bridges sufficiently to raise the load capacity to 36 tons. See Appendix D for the Load Testing Report.

ENVIRONMENTAL CLEARANCE

The SH-28 Rehabilitation and Widening project is preliminarily not expected to result in significant environmental impacts under NEPA due to the work being completed within existing right of ways and structures. However, GRDA is cognizant of issues that may arise related to the Pensacola Dam facility's status as a historic district listed in the National Park Service's National Register of Historic Places (NRHP). Without BUILD funding, the project does not have a federal nexus requiring approval by the State Historic Preservation Officer (SHPO). However, the project team has coordinated with the SHPO to address potential concerns and has identified opportunities to reduce impacts to the bridge as much as practicable in the widening and rehabilitation plans. BUILD funding would provide a federal nexus for the SHPO, and coordination with the SHPO would continue as required under Section 106 of the National Historic Preservation Act (36 Code of Federal Regulations [CFR] 800).

GRDA and ODOT are committed to preserving the historic significance of the Pensacola Dam Historic District, while being equally interested in the safety and utility of the bridges and the SH 28 roadway corridor. The project team has updated the Oklahoma State Historic Preservation Office (SHPO) with the progress of design and plan development using methods of rehabilitation and widening to minimize impacts to the historic property. Further coordination with SHPO may be delayed until notification of a successful BUILD grant. SHPO coordination is anticipated to be complete by spring 2020. Construction would not proceed until all environmental approvals and permits are received.

Field studies and preparation of NEPA documentation are ongoing at the time of this BUILD Grant Application. Coordination with the Federal Highway Administration, U.S. Fish and Wildlife Service (USFWS), Oklahoma Department of Wildlife Conservation (ODWC), Bureau of Indian Affairs, U.S. Department of Agriculture, and other impacted agencies will occur in Fall 2019 and are anticipated to be completed by March 2020. See Appendix E for updated NEPA study limits, which were revised in February 2019 to allow for the possibility of roadway resurfacing between bridges should ODOT desire to do so.

Because ODOT as co-applicant would be the primary administrator of BUILD grant funds, they would serve as the lead agency and therefore NEPA documentation would start with completion of the required Specialist Studies in ODOT's preferred formats. Coordination on scoping took place between the project team and ODOT Specialists in Fall 2018 and Spring 2019 to ensure that documentation would meet ODOT's expectations. Background research and data collection are being conducted within the study area. Specialist studies and impacts assessments are focused on the area within the footprint of the proposed project plus a buffer around the footprint appropriate for each specialist study. Tribal coordination was completed by ODOT's tribal liaison in Fall 2018. Property owner notification was conducted by the team so that field investigations

could start in late May/early June (after flood conditions at that time subsided), as shown in Figures 11 and 12. The Specialist Studies are underway with agency reviews beginning in July 2019.

Figures 11 and 12. Environmental Fieldwork June 2019

National Environmental Policy Act

BUILD funding would also provide the federal nexus for the preparation of documentation in compliance with the National Environmental Policy Act (NEPA) (42 U.S. Code Sections 4321–4375) and implementing regulations promulgated by the Council on Environmental Quality (CEQ, 40 CFR 1500), plus additional environmental regulatory compliance documentation and specialist studies. The environmental study area was established as beginning at the SH-28/SH-82A intersection on the west end and the SH-28/Hines Point Road intersection on the east end, plus a buffer centered on the roadway centerline. Depending on the results of the specialist studies, the project may be processed as a Categorical Exclusion with confirmation from ODOT, FHWA, and agencies. Project team coordination is taking place to ensure that avoidance and minimization of impacts occurs to the extent possible for efficient environmental review and processing.

- ***Historic Preservation and Cultural Resources***

In 2003, the Pensacola Dam was listed in the NRHP as a historic district under Criterion C as an excellent example of multiple-arch dam engineering. With 51 arches, the dam is the longest multi-arch dam in the United States and the only example of a multi-arch dam in Oklahoma. Six of the seven buildings and structures associated with the dam contribute to the historic district, determined to be significant on the national level when it was nominated for NRHP listing.

GRDA and ODOT are committed to preserving the historic significance of the Pensacola Dam Historic District while balancing the safety needs and continued utility of the bridges and the SH-28 roadway corridor. In anticipation of the project being classified as a federal action requiring consultation under Section 106 of the National Historic Preservation Act if awarded a BUILD grant, GRDA has consulted with the SHPO in October 2017 regarding the aesthetics and historic integrity of the Pensacola Dam Historic District. The SHPO's comments were incorporated into the design development process to the greatest extent possible to honor the aesthetics and significance of this facility while balancing the needs of the proposed project. SHPO comments specifically incorporated into the project include preserving the arch shape supporting the widening along the main dam and incorporating a railing that is in the character of, but not identical to, the existing railing. Additional field investigations took place in June and July 2019 to collect additional information about the resources within the Historic District and the Area of Potential Effects. See the December 2017 Preliminary Design Report for additional descriptions.

- ***Biological Resources***

Specialist studies include threatened and endangered species habitat assessment, presence/absence surveys for federally endangered bats (both acoustic and visual) and for the federally endangered American Burying Beetle. Substantial field work was completed in May and June 2019 and will continue through the summer, with Specialist Study documentation underway and reviews anticipated in Summer/Fall 2019. The Specialist Studies will be coordinated by ODOT, who will consult with the USFWS and the ODWC.

- ***Water Resources***

A delineation of aquatic features, including wetlands was conducted within the anticipated project area in June 2019. The project does not place fill within waters of the U.S., and therefore a Department of the Army, Section 404 of the Clean Water Act permit authorization is not anticipated for the widening and rehabilitation construction activities. GRDA will coordinate with the U.S. Army Corps of Engineers–Tulsa District Office regarding provisions for minor improvements on the spillway channel for the emergency vehicle detour route and for any construction access requirements.

- ***Historic Resources***

The historic resources study has an expanded scope to include buildings along SH-28 in Disney and an assessment of potential indirect effects on the town, in addition to assessment of the Pensacola Dam Historic District. The initial field survey for Section 106 compliance was completed in June 2019 and a follow-up investigation is scheduled for early July 2019. See

Appendix F, Alternatives Analysis for the Pensacola Dam and Spillways for additional information on the Section 106 compliance plan for the project, should it receive federal funding via a BUILD grant.

- ***Archeological Resources***

Background research has been completed for the archeological resources study with fieldwork scheduled for early July. A major constraints study for GRDA's entire service area was prepared in 2019, providing a solid understanding of the archeological resources in the vicinity of the Pensacola Dam. Reporting will be completed in concert with the historic resources study.

- ***Hazardous Materials***

A field survey was conducted in June 2019 to identify hazardous materials located within or adjacent to the project limits which may have previously impacted project area resources or may have the potential to be affected by the project. Following the field investigation and database review of state and federal records, the initial site assessment is underway to provide full documentation according to ODOT's Specialist Study guidance. No fatal flaws were discovered during the course of site reconnaissance.

- ***Socioeconomic Specialist Study***

A study is underway according to ODOT's newest documentation standards. This project would not result in any displacements, so the focus of the Specialist Study is closely aligned with the Quality of Life discussions and economic considerations that are central to the project. Widening of the dam structure would facilitate emergency services provision and enhance lake-related tourism activities; construction of the improvements is strategically timed to minimize adverse economic impacts by prohibiting road closure during the crucial summer tourist season. Construction is scheduled to commence after Labor Day weekend and conclude prior to Memorial Day weekend to allow full tourist access to the lake and local businesses.

- ***Parks Resources***

There are several public parks along Grand Lake. There is a property that the State of Oklahoma used for parks development at one time, but it is not currently in use. According to a deed agreement from the 1960s, if the park has not been developed the ownership reverts back to GRDA. The team will further investigate potential impacts in final design. There are no known concerns about compliance with Section 4(f) of the U.S. Department of Transportation Act of 1966 (23 CFR 774) with regard to publicly owned recreational resources

because direct impacts are limited to a guard rail extension to comply with current safety standards and coordination with the Official with Jurisdiction, if required, is not anticipated to be controversial.

Engagement with State DOT

This project is being completed cooperatively with ODOT, both at the field division level and headquarters office. Field division staff have actively participated in plan review and the initial public meeting. Ongoing communication has occurred throughout the project design regarding compliance with environmental regulations as well as structural coordination.

Public Engagement

An initial Stakeholder Meeting was held on October 30, 2017 at the GRDA Ecosystems and Education Center in Langley, OK. Identified stakeholders included the communities of Langley, Disney and Tia Juana, as well as Emergency Responders, US Mail Service, Schools, Parks, County Government, Chambers of Commerce, and Preservation and Historical Agencies. Project description, durations, lane and structure closures and associated impacts were discussed. The concerns of the stakeholders attending are detailed in the Preliminary Design Report and were incorporated into the project development and design. The Design Team has offered approaches to minimize impacts and has incorporated design elements as appropriate, including ensuring the bridges are open to traffic during the summer tourist season and a critical event in mid-March, providing two routes across the spillway for emergency responders to use in lieu of the 26-mile standard detour route, and coordinating closure with the local communities and first responders. GRDA has continued informal discussions with stakeholders, including a meeting with the South Grand Lake Chamber on July 18, 2018. Most recently, a Public Information Meeting was held March 13, 2019 to provide the stakeholders an update on the project. The stakeholders expressed appreciation for the accommodations being made in the project development and design in consideration of their previous comments. See Appendix G for the for the agenda and minutes of the most recent public meeting, as well as other project meetings. A formal public meeting for road closure is expected in early 2020.

Assessment of Project Risks and Mitigation Strategies

The project team brings a lengthy history of experience in conducting NEPA studies as a core practice. Key discipline specialists have the technical knowledge, field experience, and regulatory savvy to coordinate closely with project designers when possible to keep the environmental process moving forward. The team has identified creative solutions to regulatory challenges, and especially has the determination and resolve to find solutions. The project team members are committed to ensuring that environmental compliance requirements are met, no matter how challenging, such that the BUILD grant investment will be successful, worthwhile, and will ultimately lead to the structural and safety improvements that would help ensure the longevity

of the Pensacola Dam, the historic district's integrity, and the well-being of the surrounding communities.

- ***State Historic Preservation Office Consultation***

Without BUILD funding, the project does not have a federal nexus requiring approval by the SHPO. However, the project team has coordinated with the SHPO beginning in October 2017 to identify areas of concern and is addressing those concerns as much as practicable in the widening and rehabilitation plans. BUILD funding would provide a federal nexus and coordination with the SHPO would continue if the funding were awarded. The historic resources study will be available for SHPO review in August 2019. Official coordination would commence as soon as the federal nexus is triggered. Ultimate determination of the effect of the project on historic resources lies with the SHPO. Should SHPO review result in a determination of adverse effect, further work would be required. Professional historians have the expertise necessary to shepherd the project through additional coordination and compliance activities required under this scenario, including resolution of adverse effects under Section 106 of the NHPA and compliance with Section 4(f) of the U.S. Department of Transportation Act. Expert historians would guide the team along the most expeditious and appropriate compliance path; leveraging the *Programmatic Section 4(f) Evaluation and Approval for FHWA Projects that Necessitate the Use of Historic Bridges* would streamline the Section 4(f) process. This programmatic evaluation only requires consideration of a limited, pre-established set of alternatives, and does not require a draft, a 45-day comment period, or circulation of the document. Advanced research has been completed to help ensure that the clearance process for historic resources proceeds as efficiently and effectively as possible.

- ***Environmental Review***

The SH-28 Rehabilitation and Widening project is preliminarily not expected to result in significant environmental impacts under NEPA, due to the work being completed within existing right of ways and structures. Significant review will be related to the Pensacola Dam Historic District. This risk will be minimized by ongoing consultation that has already been initiated.

For Biological Resources, coordination has been initiated with the USFWS Information for Planning and Consultation for the action area of the proposed project. The action area is located within the range of several federally protected endangered species, including the Northern long-eared bat, Ozark big-eared bat, Indiana bat, gray bat, American burying beetle, Interior Least Tern, Piping Plover, Neosho Madtom, Neosho mucket, and Ozark cavefish. Potentially suitable habitat for the Northern long-eared bat, Ozark big-eared bat, Indiana bat, gray bat and American burying beetle is located within the action area. Presence/absence

surveys for these species are being conducted according to current approved USFWS protocols. This will include a visual inspection of the dam structures using a snooper truck (an under-bridge inspection vehicle) for all roosting bats and/or their past presence, an acoustic survey for bats within the forested areas of the action area, and a bucket trap survey for the American burying beetle (where potentially suitable soil exists) within the action area. These efforts will be coordinated with ODOT, who will consult with the USFWS. All work is to be completed during the active survey season for these species (prior to mid-September 2019). Risk associated with the sensitive associated timeline for this proposed project and agency coordination will be minimized by preemptively identifying potential biological resource constraints (threatened and endangered species) within the action area of the proposed project.

CONSTRUCTION SEQUENCE AND TRAFFIC CONTROL

Modifying the recommendation for Scenario 1 from the Constructability section of the December 2017 Preliminary Design Report, the widening of the Pensacola Dam Bridge will occur in conjunction with ODOT's deck rehabilitation. Both lanes of the Pensacola Dam Bridge will be closed for the widening, replacement of the hinges, and for the hydrodemolition and overlay work. Any remaining rehabilitation work below the Pensacola Dam Bridge deck can be completed as necessary after the deck rehabilitation and widening. The construction duration for the Pensacola Dam Bridge rehabilitation and widening is estimated to be 250 days, beginning with 9 months of closure to SH 28 traffic across the Pensacola Dam Bridge after Labor Day 2020. The Pensacola Dam Bridge will be opened by Memorial Day of 2021. The bridge will be open for 1.5 weeks in March 2021 to accommodate the Big Meat Run and St. Patrick's Day Parade. The intent is to provide sufficient incentives/disincentives to the Contractor to encourage sequential and simultaneous construction to expedite the work impacting traffic on the Pensacola Dam Bridge, as closure of this bridge has the greatest impact on the economy of the south Grand Lake communities.

During the closure of the Pensacola Dam Bridge, SH 28 traffic will be detoured along the route shown in the December 2017 Preliminary Design Report and in the 60% Plans.

After the Pensacola Dam Bridge rehabilitation and widening is complete, widening on the West and East Spillway Bridges can begin. The widening and deck rehabilitation of the West and East Spillway Bridges is estimated to be 3 months and can occur sequentially, keeping one of the two bridges open at all times. Bridge closure would be restricted to the time period between Labor Day of 2021 and December 2021. During the closure of the spillway bridges, SH 28 traffic will be detoured along the same route as utilized for the Pensacola Dam Bridge closure.

CONSTRUCTABILITY

The height of the main Pensacola Dam Bridge is 150' above the downstream side at the arch and main spillway sections and presents a challenge, but crane access is available on the downstream side of the bridges. Work platforms can be supported from the buttresses and piers, supported from the ground using scaffolding, or hung from the underside of the bridge. Accelerated Bridge Construction Techniques such as Precast Concrete Elements and Systems (PCES) will be used wherever possible for widening. This minimizes the amount of formwork and cast-in-place concrete necessary for construction of the widening. The two smaller spillway bridges can be accessed much more easily from the downstream side of the bridge, with a reduced height of approximately 45 feet from the spillway to bridge surface.

Discussions with various local contractors have confirmed that multiple means are available to support the upstream longitudinal beams during hinge replacement, and the work can be expedited through the use of sequential removal and replacement of the hinges.

SUPPLEMENTAL FUNDING EVALUATION

The project team has deemed the effort to seek supplemental funding via a BUILD Grant application is justified by the benefit to the safety and economy of the south Grand Lake communities. The decision was made to postpone construction for one year to as the grant is a key avenue for funding of the SH 28 project. The team will continue to move forward to be well positioned for submitting the application in July 2019. Notice of BUILD Grant award is November 12, 2019.

SCHEDULE

Completed activities since the previous Supplemental Report, and the upcoming schedule include the following:

COMPLETED:

- Materials testing of the concrete and reinforcing in the bridges | August 2018
- Constructability reviews | September 2018
- Development of paving design in coordination with ODOT | October 2018
- Load testing the bridges to improve the load ratings | November 2018
- Refinement of the rehabilitation and strengthening design |February 2019
- Specialist Studies | June-August 2019
- BUILD Grant Application | July 15, 2019

SCHEDULED:

- NEPA Documentation Review & Coordination with Agencies | August-November 2019
- Notice of BUILD Grant Award | November 12, 2019
- Public Meeting | December 2019
- Coordination with SHPO | January-February 2020
- NEPA Documentation Complete | April 2020
- Submission of 90% Plans | March 2020
- 90% Review Meeting | March 2020
- Submittal of PS&E Plans | April 2020
- Construction Letting | July 2020
- Project Award | August 2020
- Construction Start Date with Pensacola Dam Bridge closure | September 2020
- Pensacola Dam Bridge Re-opens to Traffic | May 2021
- Construction proceeds on Spillway Bridges while open to traffic | May 2021
- Spillway bridge closure for construction, one bridge closed at a time | September 2021
- Construction Complete, all bridges open to traffic | December 2021

APPENDIX A

Updated Widening Exhibits

OKLAHOMA DEPARTMENT OF TRANSPORTATION

60% PLANS

JULY 2019

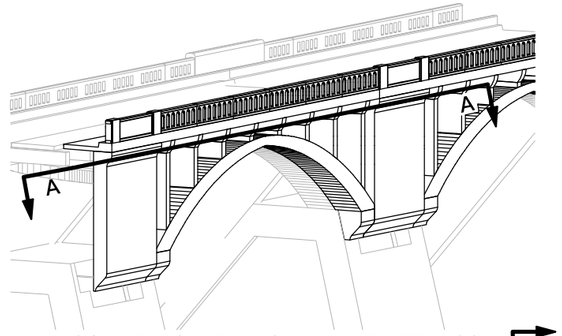

ISOMETRIC AT ARCH AND BUTTRESS

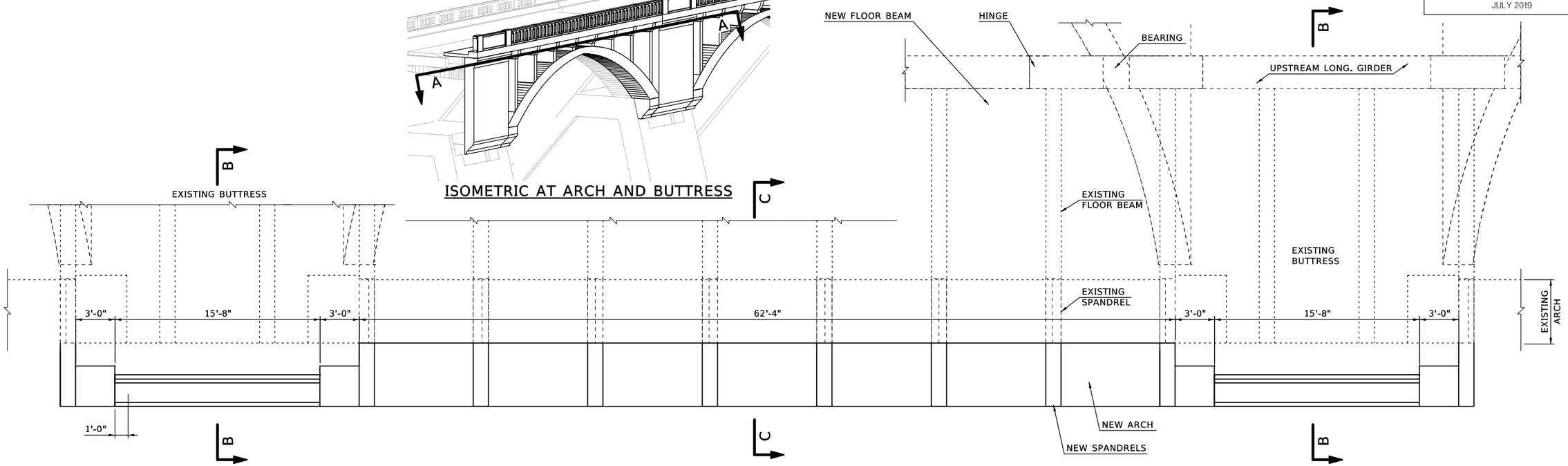

SECTION A-A

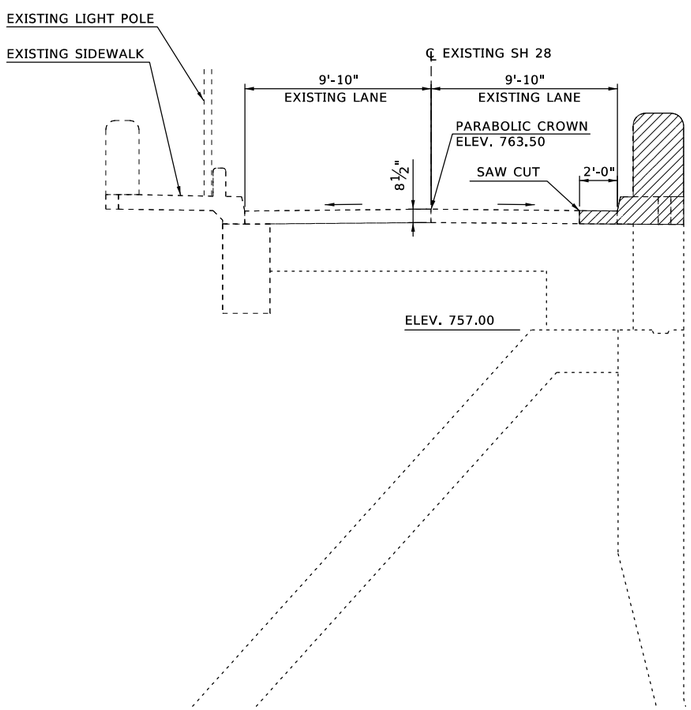

TYPICAL SECTION OF REMOVAL

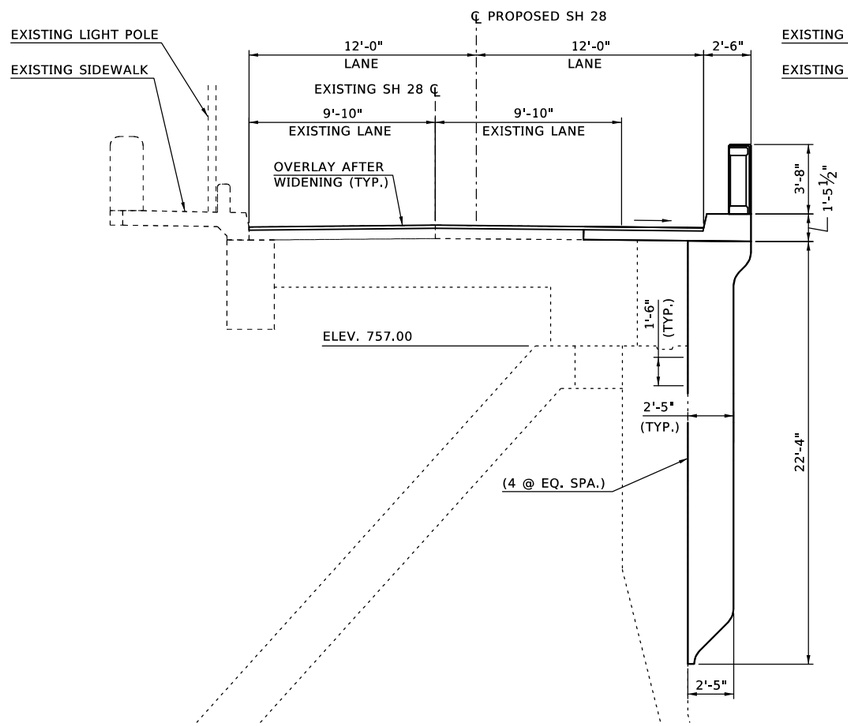

SECTION B-B

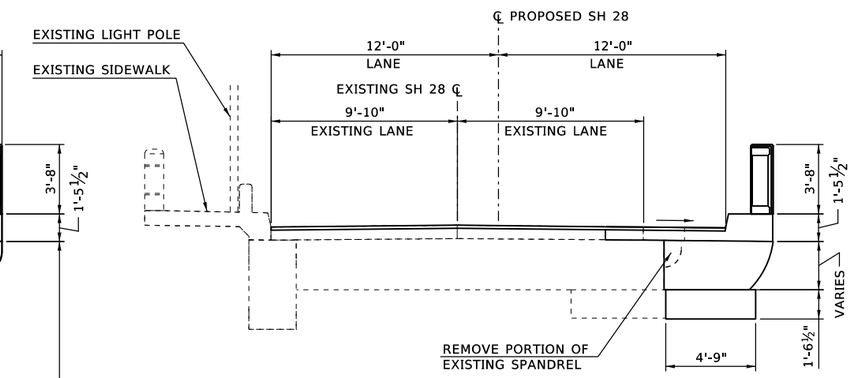

SECTION C-C

BRIDGE A

DESIGN			OKLAHOMA DEPARTMENT OF TRANSPORTATION
DRAWN			MAIN DAM ARCH TYPICAL SECTION
CHECKED			
APPROVED	SOT	2/18	
SQUAD	BENHAM		

COUNTY MAYES HIGHWAY SH-28 STATE JOB NO. 31884(05) SHEET NO. B005

7/10/2019

P:\FDB\1650-TUL\CIV\400204-GRDA-PensDam\20_DESIGN\40_CAD\S\Bridge A\B005-31884(05)-MAIN DAM ARCH TYPICAL SECTION.dgn 7:50 PM

OKLAHOMA DEPARTMENT OF TRANSPORTATION

60% PLANS

JULY 2019

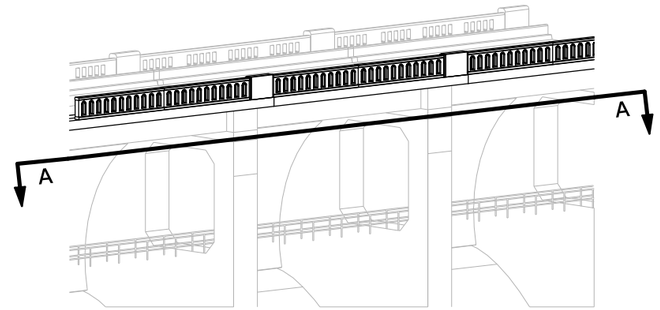

ISOMETRIC AT SPILLWAY AND PIERS

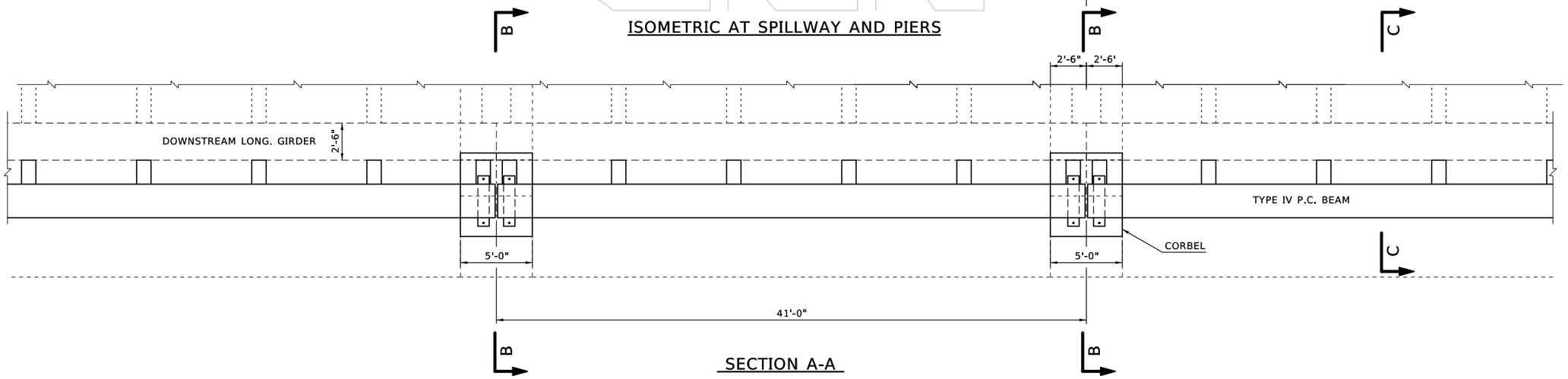

SECTION A-A

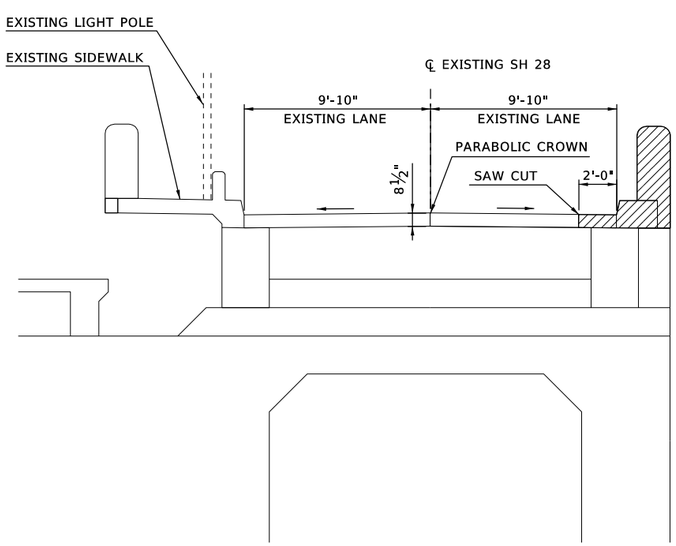

TYPICAL SECTION OF REMOVAL

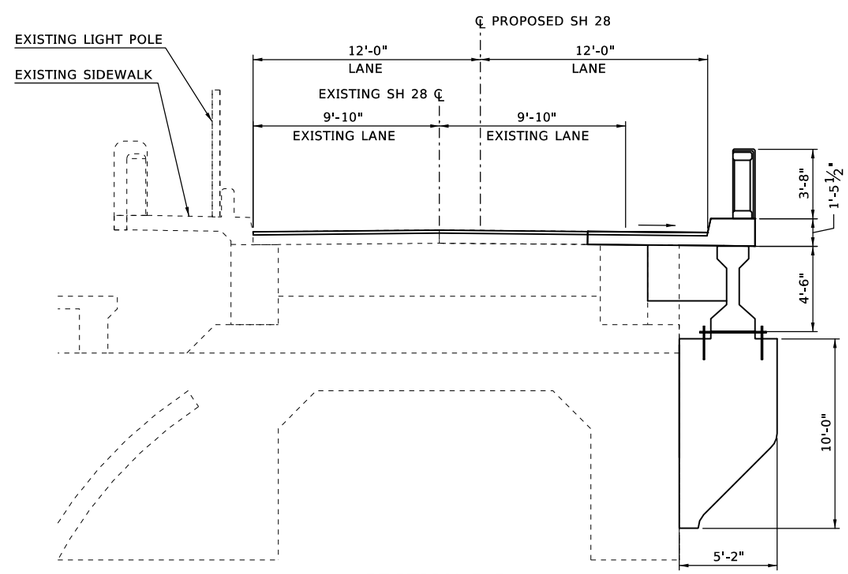

SECTION B-B

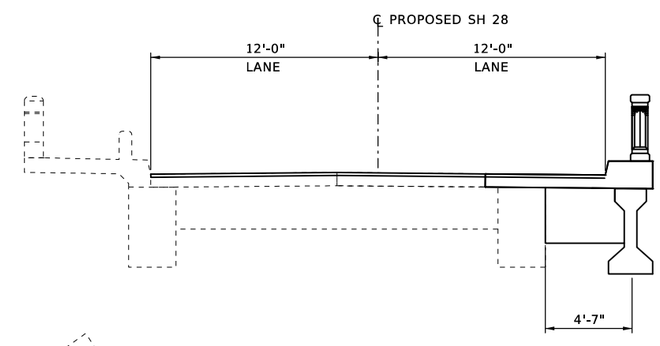

SECTION C-C

BRIDGE A

DESIGN			OKLAHOMA DEPARTMENT OF TRANSPORTATION
DRAWN			MAIN DAM SPILLWAY TYPICAL SECTION
CHECKED			
APPROVED	SOT	2/18	
SQUAD	BENHAM		

COUNTY MAYES HIGHWAY SH-28 STATE JOB NO. 31884(05) SHEET NO. B006

7/10/2019

P:\FDB\650-TUL\CIV\400204-GRDA-PensDam\20_DESGN\40_CAD\S\Bridge A\B006-31884(05)-MAIN DAM SPILLWAY TYPICAL SECTION.dgn 7/10/2019 6:56 PM

A-2

OKLAHOMA DEPARTMENT OF TRANSPORTATION

60% PLANS

JULY 2019

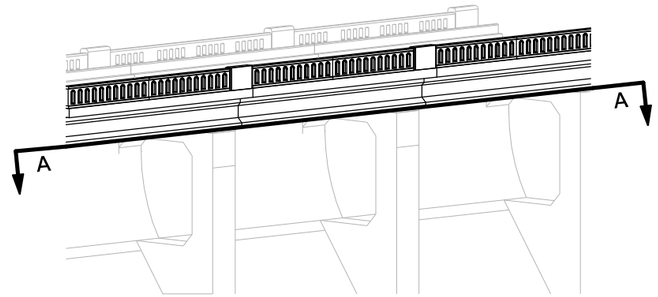

ISOMETRIC AT NON-OVERFLOW SECTION AND PIERS

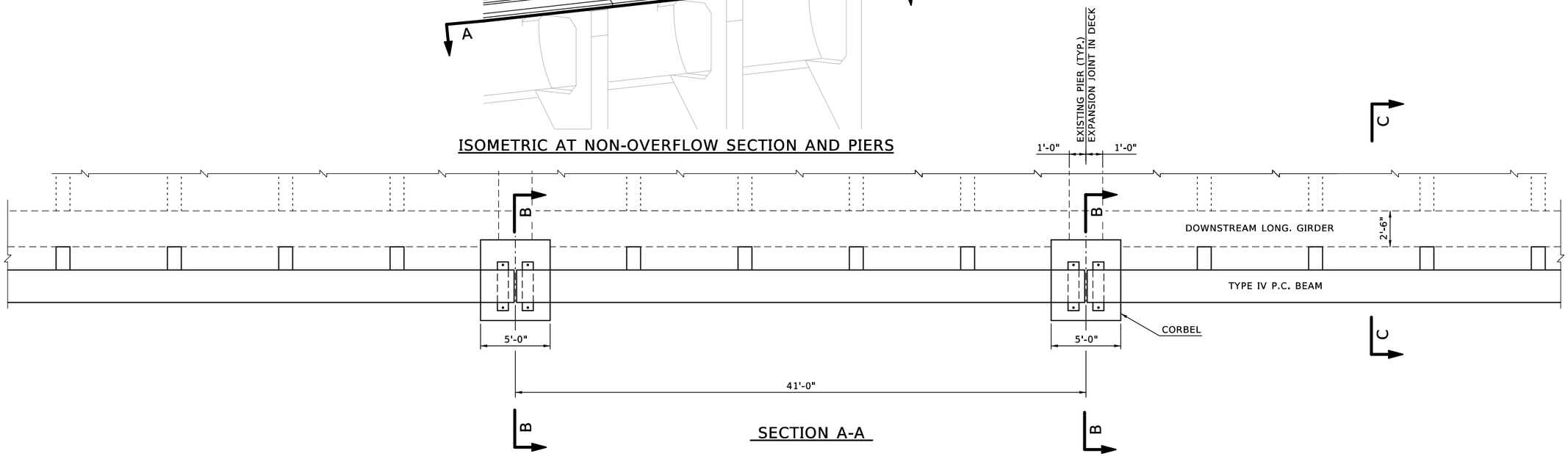

SECTION A-A

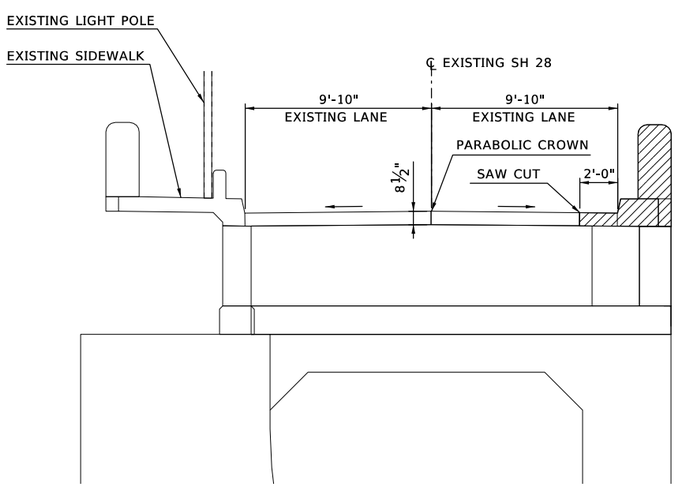

TYPICAL SECTION OF REMOVAL

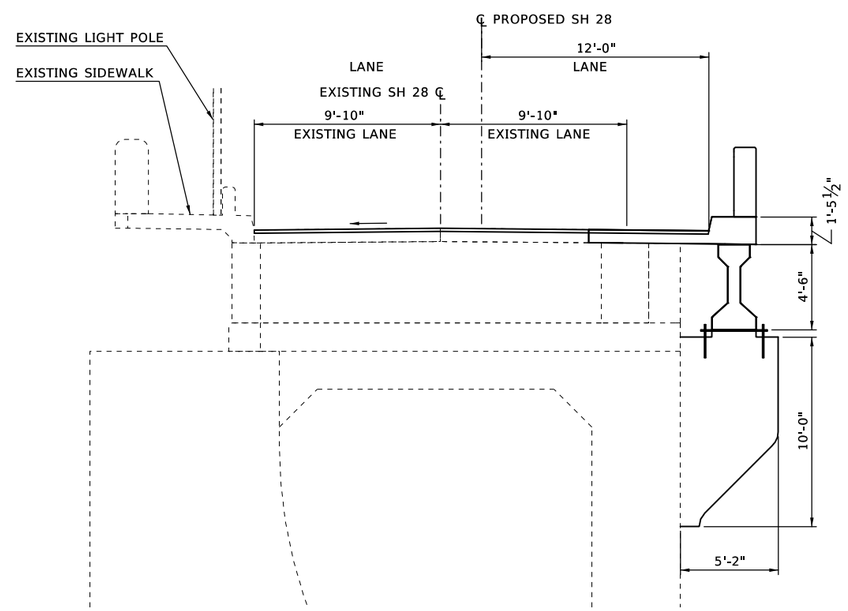

SECTION B-B

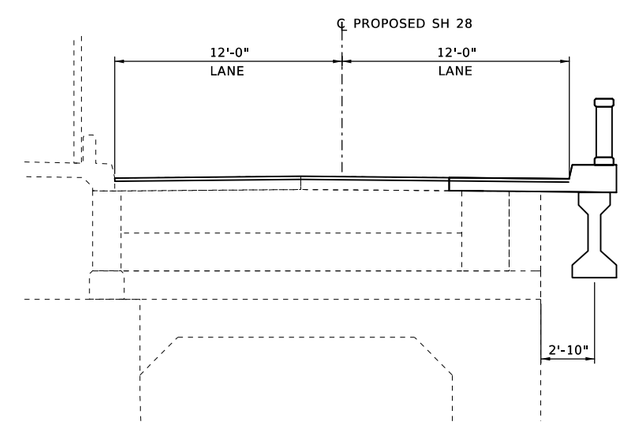

SECTION C-C

BRIDGE A

DESIGN			OKLAHOMA DEPARTMENT OF TRANSPORTATION
DRAWN			MAIN DAM NON-OVERFLOW TYPICAL SECTION
CHECKED			
APPROVED	SOT	2/18	
SQUAD	BENHAM		

COUNTY MAYES HIGHWAY SH-28 STATE JOB NO. 31884(05) SHEET NO. B007

7/10/2019

P:\FDB\650-TUL\CIV\400204-GRDA-PensDam\20_DESIGN\40_CAD\S\Bridge A\B007-31884(05)-MAIN DAM NON-OVERFLOW TYPICAL SECTION.dgn

APPENDIX B

Updated Construction Cost Estimates

GRDA SH-28 Pensacola Dam Bridge
Summary of Estimated Probable Construction Costs
July 10, 2019

WIDENING & REHABILITATION		
TOTAL BRIDGE A | GRDA	$	18,800,000
TOTAL BRIDGE B | GRDA	$	1,240,000
TOTAL BRIDGE C | GRDA	$	1,100,000
SUBTOTAL BRIDGES A, B, & C | GRDA	$	21,140,000
5% CONTINGENCY	$	1,060,000
TOTAL ESTIMATE WIDENING & REHABILITATION | GRDA PORTION	**$**	**22,200,000**
TOTAL ESTIMATE DECK REHABILITATION | ODOT PORTION	**$**	**6,000,000**
TOTAL CONSTRUCTION ESTIMATE WIDENING AND REHABILITATION	**$**	**28,200,000**

REHABILITATION | Funded by GRDA & ODOT		
TOTAL BRIDGE A | GRDA	$	7,100,000
TOTAL BRIDGE B | GRDA	$	260,000
TOTAL BRIDGE C | GRDA	$	250,000
SUBTOTAL BRIDGES A, B, & C | GRDA	$	7,610,000
5% CONTINGENCY	$	410,000
TOTAL ESTIMATE REHABILITATION | GRDA PORTION	**$**	**8,020,000**
TOTAL ESTIMATE DECK REHABILITATION | ODOT PORTION	**$**	**5,000,000**
TOTAL CONSTRUCTION ESTIMATE REHABILITATION	**$**	**13,020,000**

WIDENING | Unfunded		
TOTAL BRIDGE A | GRDA	$	11,700,000
TOTAL BRIDGE B | GRDA	$	980,000
TOTAL BRIDGE C | GRDA	$	850,000
SUBTOTAL BRIDGES A, B, & C | GRDA	$	13,530,000
5% CONTINGENCY	$	650,000
TOTAL ESTIMATE WIDENING | GRDA PORTION	**$**	**14,180,000**
TOTAL ESTIMATE DECK REHABILITATION | ODOT PORTION	**$**	**1,000,000**
TOTAL CONSTRUCTION ESTIMATE WIDENING	**$**	**15,180,000**

JOB NO. 31884(05) NBI NO. 27569

BRIDGE A PAY ITEMS

0200 BRIDGE A

WIDEN & REHAB EXISTING BRIDGE WITH 51 ARCH SECTIONS @ 84', 21 GRAVITY OVERFLOW SECTIONS @ 41', AND 11 GRAVITY NON-OVERFLOW SECTIONS @ 41'; 19'-8" CLEAR ROADWAY, SKEW 0°, CONCRETE PARAPETS AT ℄ STA. 38+68.85 SH 28 MAIN BRIDGE OVER PENSACOLA DAM & SPILLWAY.

ITEM NO.	CODE NO.	DESCRIPTION	NOTES	UNIT	QTY	UNIT PRICE	TOTAL
220	2800	SWPPP DOCUMENTATION AND MANAGEMENT		LSUM	1	$ 40,000.00	$ 40,000.00
303(A)	2100	AGGREGATE BASE TYPE A		CY	55	$ 45.00	$ 2,475.00
307(K)	4300	STABILIZED SUBGRADE		SY	325	$ 6.00	$ 1,950.00
325	5271	SEPARATOR FABRIC		SY	400	$ 2.00	$ 800.00
402(E)	0225	TRAFFIC BOUND SURFACE COURSE (TYPE E)		TON	345	$ 25.00	$ 8,625.00
407(B)	0250	TACK COAT		GAL	8	$ 6.00	$ 48.00
411(B)	5945	SUPERPAVE, TYPE S3(PG 64-22 OK)		TON	30	$ 70.00	$ 2,100.00
411(C)	5960	SUPERPAVE, TYPE S4(PG 64-22 OK)		TON	55	$ 80.00	$ 4,400.00
414(B)	5725	DOWEL JOINTED P.C.C. PAVT. (PLACEMENT)		SY	100	$ 15.00	$ 1,500.00
414(G)	5275	P.C. CONCRETE FOR PAVEMENT		CY	30	$ 120.00	$ 3,600.00
502	6116	(PL) FALSEWORK JACKING	(BR-7)	LSUM	1	$ 64,000.00	$ 64,000.00
502(A)	6173	ENGINEERED FALSEWORK	(BR-8)	LSUM	1	$ 2,500,000.00	$ 2,500,000.00
502(B)	6357	DETOUR BRIDGE	(BR-9)	LSUM	1	$ 25,000.00	$ 25,000.00
503(A)	xxxx	ARCH BEAM	(BR-1)	EA	51	$ 30,000.00	$ 1,530,000.00
503(A)	1313	PRESTRESSED CONCRETE BEAMS (TYPE IV)	(BR-1)	LF	1320	$ 475.00	$ 627,000.00
504(D)	6245	CONCRETE RAIL (TR4)	(BR-1)	LF	220	$ 80.00	$ 17,600.00
504(E)	1381	CONCRETE PARAPET	(BR-1,10)	LF	5600	$ 400.00	$ 2,240,000.00
506(A)	1322	STRUCTURAL STEEL		LB	6810	$ 3.00	$ 20,430.00
507(A)	6170	STAINLESS STEEL FIXED BEARING ASSEMBLY		EA	32	$ 2,800.00	$ 89,600.00
507(C)	6282	ELASTOMERIC BEARING PADS	(BR-11)	EA	102	$ 225.00	$ 22,950.00
509(A)	0325	H.E.S. CONCRETE CLASS AA	(BR-12)	CY	6000	$ 750.00	$ 4,500,000.00
509(B)	1328	CLASS A CONCRETE	(BR-1)	CY	70	$ 600.00	$ 42,000.00
511(B)	6010	EPOXY COATED REINFORCING STEEL	(BR-1)	LBS	1,329,600	$ 1.20	$ 1,595,520.00
520(A)	6058	PREPARATION OF CRACKS, ABOVE WATER		LF	3000	$ 30.00	$ 90,000.00
520(C)	6060	EPOXY RESIN, ABOVE WATER		GAL	250	$ 100.00	$ 25,000.00
521(A)	6210	PNUEMATICALLY PLACED MORTAR		SY	1000	$ 550.00	$ 550,000.00
524(A)	6610	(SP) CARBON FIBER-REINFORCED POLYMER	(BR-1)	SF	8300	$ 40.00	$ 332,000.00
535	6130	(SP) CORROSION INHIBITOR (SURFACE APPLIED)		SY	1000	$ 25.00	$ 25,000.00
540	4515	(PL) REPAIR BRIDGE ITEM (TYPE A)	(BR-2)	EA	21	$ 10,000.00	$ 210,000.00
540	4525	(PL) REPAIR BRIDGE ITEM (TYPE B)	(BR-3)	EA	102	$ 20,000.00	$ 2,040,000.00
540	4535	(PL) REPAIR BRIDGE ITEM (TYPE C)	(BR-4)	EA	102	$ 1,500.00	$ 153,000.00
616(B)	xxxx	4" POLYVINYL CHLORIDE (PVC) PIPE	(BR-1,5)	LF	1200	$ 30.00	$ 36,000.00
619(B)	2500	REMOVAL OF BRIDGE ITEMS	(BR-6)	LSUM	1	$ 500,000.00	$ 500,000.00
623(A)	0932	BEAM GUARDRAIL W-BEAM SINGLE		LF	140	$ 20.00	$ 2,800.00
623(G)	8590	GUARDRAIL END TREATMENT (31")		EA	2	$ 2,800.00	$ 5,600.00
623(I)	8700	GUARDRAIL BRIDGE CONN-THRIE BEAM (31")		EA	2	$ 2,000.00	$ 4,000.00
640(A)	1426	FIELD OFFICE		LSUM	1	$ 40,000.00	$ 40,000.00
641	1399	MOBILIZATION		LSUM	1	$ 820,000.00	$ 820,000.00
642(B)	0096	CONSTRUCTION STAKING LEVEL II		LSUM	1	$ 300,000.00	$ 300,000.00
871(A)	8325	IMPACT ATTENUATOR		EA	2	$ 25,000.00	$ 50,000.00
880(J)	8905	CONSTRUCTION TRAFFIC CONTROL		LSUM	1	$ 275,000.00	$ 275,000.00
						TOTAL BRIDGE A	**$ 18,797,998.00**

Widening & Rehabilitation Cost Estimate

JOB NO. 31884(05) NBI NO. 29642

BRIDGE B PAY ITEMS

0201 BRIDGE B

WIDEN & REHAB BRIDGE WITH 11 CONCRETE GIRDER SPANS @ 41', 20'-0" CLEAR ROADWAY,
SKEW 0°, CONCRETE PARAPETS AT ℄ STA. 2+25.50 SH 28 OVER EAST SPILLWAY NO. 1

ITEM NO.	CODE NO.	DESCRIPTION	NOTES	UNIT	TOTAL	UNIT PRICE	TOTAL
303(A)	2100	AGGREGATE BASE TYPE A		CY	70	$ 45.00	$ 3,150.00
307(K)	4300	STABILIZED SUBGRADE		SY	425	$ 6.00	$ 2,550.00
325	5271	SEPARATOR FABRIC		SY	515	$ 2.00	$ 1,030.00
407(B)	0250	TACK COAT		GAL	8	$ 6.00	$ 48.00
411(B)	5945	SUPERPAVE, TYPE S3(PG 64-22 OK)		TON	40	$ 70.00	$ 2,800.00
411(C)	5960	SUPERPAVE, TYPE S4(PG 64-22 OK)		TON	85	$ 80.00	$ 6,800.00
414(B)	5725	DOWEL JOINTED P.C.C. PAVT. (PLACEMENT)		SY	140	$ 15.00	$ 2,100.00
414(G)	5275	P.C. CONCRETE FOR PAVEMENT		CY	40	$ 120.00	$ 4,800.00
502	6116	(PL) FALSEWORK JACKING	(BR-7)	LSUM	1	$ 22,000.00	$ 22,000.00
503(A)	1313	PRESTRESSED CONCRETE BEAMS (TYPE IV)	(BR-1)	LF	451	$ 475.00	$ 214,225.00
504(E)	1381	CONCRETE PARAPET	(BR-1,10)	LF	451	$ 400.00	$ 180,400.00
506(A)	1322	STRUCTURAL STEEL		LB	475	$ 3.00	$ 1,425.00
507(A)	6170	STAINLESS STEEL FIXED BEARING ASSEMBLY		EA	11	$ 2,800.00	$ 30,800.00
509(A)	1326	CLASS AA CONCRETE	(BR-1)	CY	500	$ 550.00	$ 275,000.00
511(B)	6010	EPOXY COATED REINFORCING STEEL	(BR-1)	LBS	154,100	$ 1.20	$ 184,920.00
520(A)	6058	PREPARATION OF CRACKS, ABOVE WATER		LF	30	$ 30.00	$ 900.00
520(C)	6060	EPOXY RESIN, ABOVE WATER		GAL	2	$ 100.00	$ 200.00
521(A)	6210	PNUEMATICALLY PLACED MORTAR		SY	20	$ 550.00	$ 11,000.00
524(A)	6610	(SP) CARBON FIBER-REINFORCED POLYMER	(BR-1)	SF	100	$ 45.00	$ 4,500.00
535	6130	(SP) CORROSION INHIBITOR (SURFACE APPLIED)		SY	20	$ 25.00	$ 500.00
540	4515	(PL) REPAIR BRIDGE ITEM (TYPE A)	(BR-2)	EA	11	$ 10,000.00	$ 110,000.00
616(B)	xxxx	4" POLYVINYL CHLORIDE (PVC) PIPE	(BR-1,5)	LF	120	$ 30.00	$ 3,600.00
619(B)	2500	REMOVAL OF BRIDGE ITEMS	(BR-6)	LSUM	1	$ 50,000.00	$ 50,000.00
623(A)	0932	BEAM GUARDRAIL W-BEAM SINGLE		LF	100	$ 20.00	$ 2,000.00
623(G)	8590	GUARDRAIL END TREATMENT (31")		EA	4	$ 2,800.00	$ 11,200.00
623(I)	8700	GUARDRAIL BRIDGE CONN-THRIE BEAM (31")		EA	4	$ 2,000.00	$ 8,000.00
880(J)	8905	CONSTRUCTION TRAFFIC CONTROL		LSUM	1	$ 100,000.00	$ 100,000.00
						TOTAL BRIDGE B	**$ 1,233,948.00**

JOB NO. 31884(05) NBI NO. 29645

BRIDGE C PAY ITEMS

0202 BRIDGE C

WIDEN & REHAB BRIDGE WITH 10 CONCRETE GIRDER SPANS @ 41', 20'-0" CLEAR ROADWAY,
SKEW 0°, CONCRETE PARAPETS AT ℄ STA. 2+05.00 SH 28 OVER EAST SPILLWAY NO. 2

ITEM NO.	CODE NO.	DESCRIPTION	NOTES	UNIT	TOTAL	UNIT PRICE	TOTAL
303(A)	2100	AGGREGATE BASE TYPE A		CY	70	$ 45.00	$ 3,150.00
307(K)	4300	STABILIZED SUBGRADE		SY	425	$ 6.00	$ 2,550.00
325	5271	SEPARATOR FABRIC		SY	515	$ 2.00	$ 1,030.00
407(B)	0250	TACK COAT		GAL	8	$ 6.00	$ 48.00
411(B)	5945	SUPERPAVE, TYPE S3(PG 64-22 OK)		TON	40	$ 70.00	$ 2,800.00
411(C)	5960	SUPERPAVE, TYPE S4(PG 64-22 OK)		TON	105	$ 80.00	$ 8,400.00
414(B)	5725	DOWEL JOINTED P.C.C. PAVT. (PLACEMENT)		SY	140	$ 15.00	$ 2,100.00
414(G)	5275	P.C. CONCRETE FOR PAVEMENT		CY	40	$ 120.00	$ 4,800.00
502	6116	(PL) FALSEWORK JACKING	(BR-7)	LSUM	1	$ 22,000.00	$ 22,000.00
503(A)	1313	PRESTRESSED CONCRETE BEAMS (TYPE IV)	(BR-1)	LF	410	$ 475.00	$ 194,750.00
504(E)	1381	CONCRETE PARAPET	(BR-1,10)	LF	410	$ 400.00	$ 164,000.00
506(A)	1322	STRUCTURAL STEEL		LB	440	$ 3.00	$ 1,320.00
507(A)	6170	STAINLESS STEEL FIXED BEARING ASSEMBLY		EA	10	$ 2,800.00	$ 28,000.00
509(A)	1326	CLASS AA CONCRETE	(BR-1)	CY	400	$ 550.00	$ 220,000.00
511(B)	6010	EPOXY COATED REINFORCING STEEL	(BR-1)	LBS	123,900	$ 1.20	$ 148,680.00
520(A)	6058	PREPARATION OF CRACKS, ABOVE WATER		LF	30	$ 30.00	$ 900.00
520(C)	6060	EPOXY RESIN, ABOVE WATER		GAL	2	$ 100.00	$ 200.00
521(A)	6210	PNUEMATICALLY PLACED MORTAR		SY	20	$ 550.00	$ 11,000.00
524(A)	6610	(SP) CARBON FIBER-REINFORCED POLYMER	(BR-1)	SF	100	$ 45.00	$ 4,500.00
535	6130	(SP) CORROSION INHIBITOR (SURFACE APPLIED)		SY	20	$ 25.00	$ 500.00
540	4515	(PL) REPAIR BRIDGE ITEM (TYPE A)	(BR-2)	EA	10	$ 10,000.00	$ 100,000.00
616(B)	xxxx	4" POLYVINYL CHLORIDE (PVC) PIPE	(BR-1,5)	LF	110	$ 30.00	$ 3,300.00
619(B)	2500	REMOVAL OF BRIDGE ITEMS	(BR-6)	LSUM	1	$ 50,000.00	$ 50,000.00
623(A)	0932	BEAM GUARDRAIL W-BEAM SINGLE		LF	300	$ 20.00	$ 6,000.00
623(G)	8590	GUARDRAIL END TREATMENT (31")		EA	4	$ 2,800.00	$ 11,200.00
623(I)	8700	GUARDRAIL BRIDGE CONN-THRIE BEAM (31")		EA	4	$ 2,000.00	$ 8,000.00
880(J)	8905	CONSTRUCTION TRAFFIC CONTROL		LSUM	1	$ 100,000.00	$ 100,000.00
						TOTAL BRIDGE C	**$ 1,099,228.00**

JOB NO. 31884(05) NBI NO. 27569

BRIDGE A PAY ITEMS

0200 BRIDGE A

REHAB EXISTING BRIDGE WITH 51 ARCH SECTIONS @ 84', 21 GRAVITY OVERFLOW SECTIONS @ 41', AND 11 GRAVITY NON-OVERFLOW SECTIONS; 19'-8" CLEAR ROADWAY, SKEW 0°, CONCRETE PARAPETS AT ℄ STA. 38+68.85 SH 28 MAIN BRIDGE OVER PENSACOLA DAM & SPILLWAY.

ITEM NO.	CODE NO.	DESCRIPTION	NOTES	UNIT	QTY	UNIT PRICE	TOTAL
220	2800	SWPPP DOCUMENTATION AND MANAGEMENT		LSUM	1	$ 20,000.00	$ 20,000.00
402(E)	0225	TRAFFIC BOUND SURFACE COURSE (TYPE E)		TON	345	$ 25.00	$ 8,625.00
407(B)	0250	TACK COAT		GAL	8	$ 6.00	$ 48.00
411(B)	5945	SUPERPAVE, TYPE S3(PG 64-22 OK)		TON	30	$ 70.00	$ 2,100.00
411(C)	5960	SUPERPAVE, TYPE S4(PG 64-22 OK)		TON	55	$ 80.00	$ 4,400.00
502	6116	(PL) FALSEWORK JACKING	(BR-7)	LSUM	1	$ 64,000.00	$ 64,000.00
502(A)	6173	ENGINEERED FALSEWORK	(BR-8)	LSUM	1	$ 2,500,000.00	$ 2,500,000.00
502(B)	6357	DETOUR BRIDGE	(BR-9)	LSUM	1	$ 25,000.00	$ 25,000.00
504(D)	6245	CONCRETE RAIL (TR4)	(BR-1)	LF	140	$ 80.00	$ 11,200.00
507(C)	6282	ELASTOMERIC BEARING PADS	(BR-11)	EA	102	$ 225.00	$ 22,950.00
509(A)	1326	CLASS AA CONCRETE	(BR-1)	CY	144	$ 550.00	$ 79,090.00
509(B)	1328	CLASS A CONCRETE	(BR-1)	CY	70	$ 600.00	$ 42,000.00
511(B)	6010	EPOXY COATED REINFORCING STEEL	(BR-1)	LBS	46,400	$ 1.20	$ 55,680.00
520(A)	6058	PREPARATION OF CRACKS, ABOVE WATER		LF	3000	$ 30.00	$ 90,000.00
520(C)	6060	EPOXY RESIN, ABOVE WATER		GAL	250	$ 100.00	$ 25,000.00
521(A)	6210	PNUEMATICALLY PLACED MORTAR		SY	1000	$ 550.00	$ 550,000.00
524(A)	6610	(SP) CARBON FIBER-REINFORCED POLYMER	(BR-1)	SF	8300	$ 40.00	$ 332,000.00
535	6130	(SP) CORROSION INHIBITOR (SURFACE APPLIED)		SY	1000	$ 25.00	$ 25,000.00
540	4515	(PL) REPAIR BRIDGE ITEM (TYPE A)	(BR-2)	EA	21	$ 10,000.00	$ 210,000.00
540	4525	(PL) REPAIR BRIDGE ITEM (TYPE B)	(BR-3)	EA	102	$ 20,000.00	$ 2,040,000.00
540	4535	(PL) REPAIR BRIDGE ITEM (TYPE C)	(BR-4)	EA	102	$ 1,500.00	$ 153,000.00
616(B)	xxxx	4" POLYVINYL CHLORIDE (PVC) PIPE	(BR-1,5)	LF	1100	$ 30.00	$ 33,000.00
619(B)	2500	(PL)REMOVAL OF BRIDGE ITEMS	(BR-6)	LSUM	1	$ 20,000.00	$ 20,000.00
623(A)	0932	BEAM GUARDRAIL W-BEAM SINGLE		LF	140	$ 20.00	$ 2,800.00
623(G)	8590	GUARDRAIL END TREATMENT (31")		EA	2	$ 2,800.00	$ 5,600.00
623(I)	8700	GUARDRAIL BRIDGE CONN-THRIE BEAM (31")		EA	2	$ 2,000.00	$ 4,000.00
640(A)	1426	FIELD OFFICE		LSUM	1	$ 20,000.00	$ 20,000.00
641	1399	MOBILIZATION		LSUM	1	$ 350,000.00	$ 350,000.00
642(B)	0096	CONSTRUCTION STAKING LEVEL II		LSUM	1	$ 224,300.00	$ 224,300.00
871(A)	8325	IMPACT ATTENUATOR		EA	2	$ 25,000.00	$ 50,000.00
880(J)	8905	CONSTRUCTION TRAFFIC CONTROL		LSUM	1	$ 125,000.00	$ 125,000.00
						TOTAL BRIDGE A	**$ 7,094,793.00**

JOB NO. 31884(05) NBI NO. 29642

BRIDGE B PAY ITEMS

0201 BRIDGE B

REHAB BRIDGE WITH 11 CONCRETE GIRDER SPANS @ 41', 20'-0" CLEAR ROADWAY,
SKEW 0°, CONCRETE PARAPETS AT ℄ STA. 2+25.50 SH 28 OVER EAST SPILLWAY NO. 1

ITEM NO.	CODE NO.	DESCRIPTION	NOTES	UNIT	TOTAL	UNIT PRICE	TOTAL
407(B)	0250	TACK COAT		GAL	8	$ 25.00	$ 200.00
411(B)	5945	SUPERPAVE, TYPE S3(PG 64-22 OK)		TON	40	$ 70.00	$ 2,800.00
411(C)	5960	SUPERPAVE, TYPE S4(PG 64-22 OK)		TON	85	$ 80.00	$ 6,800.00
502	6116	(PL) FALSEWORK JACKING	(BR-7)	LSUM	1	$ 22,000.00	$ 22,000.00
509(A)	1326	CLASS AA CONCRETE	(BR-1)	CY	12	$ 550.00	$ 6,600.00
511(B)	6010	EPOXY COATED REINFORCING STEEL	(BR-1)	LBS	5600	$ 1.20	$ 6,720.00
520(A)	6058	PREPARATION OF CRACKS, ABOVE WATER		LF	30	$ 30.00	$ 900.00
520(C)	6060	EPOXY RESIN, ABOVE WATER		GAL	2	$ 100.00	$ 200.00
521(A)	6210	PNUEMATICALLY PLACED MORTAR		SY	20	$ 550.00	$ 11,000.00
524(A)	6610	(SP) CARBON FIBER-REINFORCED POLYMER	(BR-1)	SF	100	$ 40.00	$ 4,000.00
535	6130	(SP) CORROSION INHIBITOR (SURFACE APPLIED)		SY	10	$ 25.00	$ 250.00
540	4515	(PL) REPAIR BRIDGE ITEM (TYPE A)	(BR-2)	EA	11	$ 10,000.00	$ 110,000.00
616(B)	xxxx	4" POLYVINYL CHLORIDE (PVC) PIPE	(BR-1,5)	LF	120	$ 30.00	$ 3,600.00
619(B)	2500	(PL)REMOVAL OF BRIDGE ITEMS	(BR-6)	LSUM	1	$ 10,000.00	$ 10,000.00
623(A)	0932	BEAM GUARDRAIL W-BEAM SINGLE		LF	100	$ 20.00	$ 2,000.00
623(G)	8590	GUARDRAIL END TREATMENT (31")		EA	4	$ 2,800.00	$ 11,200.00
623(I)	8700	GUARDRAIL BRIDGE CONN-THRIE BEAM (31")		EA	4	$ 2,000.00	$ 8,000.00
880(J)	8905	CONSTRUCTION TRAFFIC CONTROL		LSUM	1	$ 50,000.00	$ 50,000.00
						TOTAL BRIDGE B	**$ 256,270.00**

Rehabilitation Cost Estimate

JOB NO. 31884(05) NBI NO. 29645

BRIDGE C PAY ITEMS

0202 BRIDGE C

REHAB BRIDGE WITH 10 CONCRETE GIRDER SPANS @ 41', 20'-0" CLEAR ROADWAY,
SKEW 0°, CONCRETE PARAPETS AT ℄ STA. 2+05.00 SH 28 OVER EAST SPILLWAY NO. 2

ITEM NO.	CODE NO.	DESCRIPTION	NOTES	UNIT	TOTAL	UNIT PRICE	TOTAL
407(B)	0250	TACK COAT		GAL	8	$ 25.00	$ 200.00
411(B)	5945	SUPERPAVE, TYPE S3(PG 64-22 OK)		TON	40	$ 70.00	$ 2,800.00
411(C)	5960	SUPERPAVE, TYPE S4(PG 64-22 OK)		TON	105	$ 80.00	$ 8,400.00
502	6116	(PL) FALSEWORK JACKING	(BR-7)	LSUM	1	$ 20,000.00	$ 20,000.00
509(A)	1326	CLASS AA CONCRETE	(BR-1)	CY	11	$ 550.00	$ 5,995.00
511(B)	6010	EPOXY COATED REINFORCING STEEL	(BR-1)	LBS	5100	$ 1.20	$ 6,120.00
520(A)	6058	PREPARATION OF CRACKS, ABOVE WATER		LF	30	$ 30.00	$ 900.00
520(C)	6060	EPOXY RESIN, ABOVE WATER		GAL	2	$ 100.00	$ 200.00
521(A)	6210	PNUEMATICALLY PLACED MORTAR		SY	20	$ 550.00	$ 11,000.00
524(A)	6610	(SP) CARBON FIBER-REINFORCED POLYMER	(BR-1)	SF	100	$ 40.00	$ 4,000.00
535	6130	(SP) CORROSION INHIBITOR (SURFACE APPLIED)		SY	10	$ 25.00	$ 250.00
540	4515	(PL) REPAIR BRIDGE ITEM (TYPE A)	(BR-2)	EA	10	$ 10,000.00	$ 100,000.00
616(B)	xxxx	4" POLYVINYL CHLORIDE (PVC) PIPE	(BR-1,5)	LF	110	$ 30.00	$ 3,300.00
619(B)	2500	(PL)REMOVAL OF BRIDGE ITEMS	(BR-6)	LSUM	1	$ 10,000.00	$ 10,000.00
623(A)	0932	BEAM GUARDRAIL W-BEAM SINGLE		LF	300	$ 20.00	$ 6,000.00
623(G)	8590	GUARDRAIL END TREATMENT (31")		EA	4	$ 2,800.00	$ 11,200.00
623(I)	8700	GUARDRAIL BRIDGE CONN-THRIE BEAM (31")		EA	4	$ 2,000.00	$ 8,000.00
880(J)	8905	CONSTRUCTION TRAFFIC CONTROL		LSUM	1	$ 50,000.00	$ 50,000.00
						TOTAL BRIDGE C	**$ 248,365.00**

APPENDIX C

Materials Testing

7/17/2018		Pensacola Dam/Grand Lake E. Spillway		
Location	**Core**	**Time**	**Steel**	**Notes**
E. Spillway	1A	8:20 AM	N	Grand Lake E. Spillway; 2 cores taken on the west abutment, south wing wall
E. Spillway	1B	8:30 AM	Y	
Pensacola Dam	2A	10:00 AM	Y	Pensacola Dam at Grand Lake; 6 cores taken on the north beam, west of the east abutment
Pensacola Dam	2B	10:15 AM	N	
Pensacola Dam	2C	10:45 AM	N	
Pensacola Dam	2D	11:00 AM	Y	
Pensacola Dam	2E	11:20 AM	N	
Pensacola Dam	2F	11:30 AM	Y	

STATE OF OKLAHOMA
DEPARTMENT OF TRANSPORTATION

Materials Division
200 N.E. 21st St
Oklahoma City, OK 73105

Compressive Strength Analysis of Concrete Cores
AASHTO (T-22, T-24, T-231)

Contract ID:		County:	Div:
Project No:	Disney Dam	Sample Date:	7/17/2018
Piece No:		Tested By:	GM
Contractor:		Test Date:	7/23/2018
Residency:		Date Received:	7/17/2018

Core Number	Diameter (Inches)	Area (SQ. IN.)	Capped Height	H/D Ratio	Break Load (LBS.)	Stress (PSI.)	Corrected Stress (PSI.)	Correction Factor
1A	3.96	12.32	7.06	1.78	67320	5470	5470	1.000
1A	3.96	12.32	5.22	1.32	64565	5240	4920	0.938
2B	3.96	12.32	4.94	1.25	54480	4420	4110	0.930
2C	3.96	12.32	7.95	2.01	35960	2920	2920	1.000
2D	3.96	12.32	7.07	1.79	39160	3180	3180	1.000
2E	3.96	12.32	6.85	1.73	52275	4240	4150	0.978

Dam 3: Core's 1A & 1B cored @ 8:20 and 8:30 A.M.
Dam 1: Core's 2B, 2C, 2D, & 2E cored @ 10:15, 10:45, 11:00, & 11:20 A.M.

Remarks: Meets Specifcation Requirements

Mat. Div. Use Only
Copied By:
Filed By:
Dist'd By:

Scott Seiter P.E.
Materials Engineer

Element Materials Technology
3100 North Hemlock Circle
Broken Arrow, OK
74012-1115 USA

P 918 258 6066
F 918 258 1154
T 800 982 8378
info.brokenarrow@element.com
element.com

Laboratory Report - EAR-Controlled Data

Attn: **Matt Romero**

Oklahoma Department of Transportation
200 N.E. 21st Street
Oklahoma City, OK 73105-3204 US

Report No: **B18070656**
Date Reported: **7/24/2018**
P.O. No: **Verbal**

Material: **Steel**

Description: **(4) Sectioned Test Pieces, Material: Reinforcing Steel**

Room Temperature Tensile Testing ASTM E8/E8M-16a, Longitudinal, As Received

Sample ID	Diameter, Initial, in	Tensile Strength, ksi	Yield (0.2% Offset), ksi	Elongation After Fracture (4D), %	Reduction of Area, %	Location of Fracture
NBI # 29645 Sample 1B	0.247	77	47	33	60	Inside Middle Half of Gage

Room Temperature Tensile Testing ASTM E8/E8M-16a, Longitudinal, As Received

Sample ID	Diameter, Initial, in	Tensile Strength, ksi	Yield (0.2% Offset), ksi	Elongation After Fracture (4D), %	Reduction of Area, %	Location of Fracture
NBI # 27569 Sample 2A	0.248	82	46	29	53	Inside Middle Half of Gage

Room Temperature Tensile Testing ASTM E8/E8M-16a, Longitudinal, As Received

Sample ID	Diameter, Initial, in	Tensile Strength, ksi	Yield (0.2% Offset), ksi	Elongation After Fracture (4D), %	Reduction of Area, %	Location of Fracture
NBI # 27569 Sample 2D	0.248	78	50	30	52	Inside Middle Half of Gage

Room Temperature Tensile Testing ASTM E8/E8M-16a, Longitudinal, As Received

Sample ID	Diameter, Initial, in	Tensile Strength, ksi	Yield (0.2% Offset), ksi	Elongation After Fracture (4D), %	Reduction of Area, %	Location of Fracture
NBI # 27569 Sample 2F	0.248	79	49	30	60	Inside Middle Half of Gage

Element Materials Technology
3100 North Hemlock Circle
Broken Arrow, OK
74012-1115 USA

P 918 258 6066
F 918 258 1154
T 800 982 8378
info.brokenarrow@element.com
element.com

Laboratory Report - EAR-Controlled Data

Attn: **Matt Romero**

Oklahoma Department of Transportation
200 N.E. 21st Street
Oklahoma City, OK 73105-3204 US

Report No: **B18070656**
Date Reported: **7/24/2018**
P.O. No: **Verbal**

This document contains technical data whose export and reexport/ retransfer may be subject to control by the U.S. Department of Commerce under the Export Administration Act and the Export Administration Regulations. The Department of Commerce's prior written approval may be required for the export or re-export/retransfer of such technical data to any foreign person, foreign entity or foreign organization whether in the United States or abroad.

Approved by:

Doug Kooken
Operations Manager

APPENDIX D

Load Testing Report

TranSystems

2400 Pershing Road
Suite 400
Kansas City, MO 64108
Tel 816-329-8600
Fax 816-329-8701

www.transystems.com

January 14, 2019

Ms. Sue Tryon, PE
Benham Engineering
Senior Project Manager
One West Third Street, Suite 200
Tulsa, OK 74103

Reference: Pensacola Dam Load Testing Analysis

Dear Ms. Tryon,

TranSystems was contracted by Benham Engineering to conduct structural engineering services for the Pensacola Dam Load Testing Project. Services include reviewing the proposed locations of the strain gages, developing load test procedures, providing onsite personnel for each load test, developing computer models utilizing structural analysis software to model the response of the structure, and analyzing the load testing data. This letter discusses the findings of the load testing and provides capacity to demand ratios for various members within each of the three spans tested.

The structure carries two lanes of Oklahoma State Highway 28 over the Pensacola Dam in Langley, OK and consists of 51 Arch Sections, 21 Spillway Sections, and 11 Non-Overflow Sections. The Arch Sections span 60'-0" with a concrete open spandrel arch and columns on the downstream side and a concrete girder on the upstream side. Floorbeams are spaced at 8'-9" over the arch section and 7'-7 1/2" over the buttress. The Spillway and Non-Overflow Sections span 41'-0" and consist of upstream and downstream girders with floorbeams spaced at 8'-0". In the Non-Overflow Section, the upstream girder is supported by the dam under each floorbeam. The deck appears to be cast integral with the floorbeams and girders. The structure has a 19'-8" wide roadway surface and a 4'-0" wide sidewalk on the upstream side.

LOAD TESTING PROCEDURE

The load testing consisted of applying a known load at specific locations in one span of the Arch Section, Spillway Section, and Non-Overflow Sections and recording the strain measurements at the various gage locations. The strain gages were supplied and installed by LifeSpan Technologies, a subconsultant to Benham Engineering. LifeSpan Technologies was also responsible for obtaining the strain gage measurements. Strain gages were installed on various members to determine the response and behavior of the structure to the known loading. Expected strain readings were calculated at the various gage locations throughout each span based on the baseline models. The baseline models were created based on the guidance from the Manual of Bridge Evaluation (MBE) and assumptions derived from the original design plans. Initial assumptions included simply supported floorbeams and the deck acting as simply supported segments between floorbeams.

The Non-Overflow Section was the first span tested and utilized 20 strain gages. The strain gages were installed on two floorbeams, the upstream girder, and the downstream girder. A single axle dump truck with a measured weight of 33,120 lbs (16.5 tons) was used to load the Non-Overflow Section. The Spillway Section was tested utilizing 11

gages installed on one floorbeam, the upstream girder, the downstream girder and the underside of the deck. A tandem axle dump truck with a measured weight of 53,800 lbs (26.9 tons) was used to load the Spillway Section. The Arch Section was tested with 24 strain gages installed on the arch ribs, a spandrel column, a floorbeam, and the upstream girder. The Arch Section was loaded with a tandem axle dump truck with a measured weight of 51,700 lbs (25.9 tons). For each load test, the trucks were provided by the Oklahoma Department of Transportation (ODOT) and wheel scales were provided by System Scale of Tulsa, OK to measure the load in each axle **(see Figure 1)**.

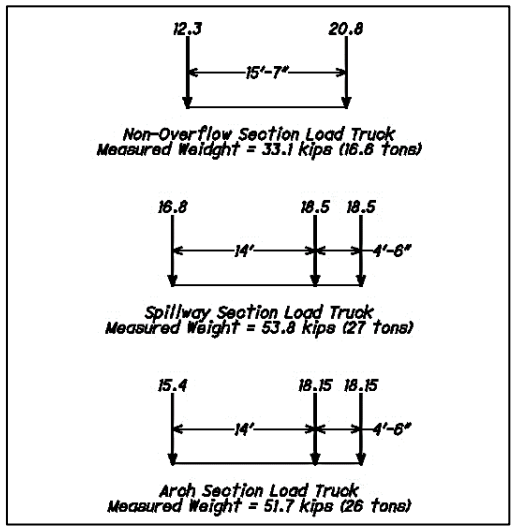

Figure 1 – Vehicle configurations of the three load tests performed.

In each span the truck was driven to specific locations, stopped, and strain readings were recorded. The locations were chosen to maximize the strain readings at the various strain gage positions. Strain gages were installed on the floorbeams to measure the maximum positive moment response and also determine if any negative moment strains were being developed at the connections to the girders. On the longitudinal girders, strain gages were installed to measure the maximum positive moment response at midspan, negative moment strains on continuous and cantilevered girders, and shear strains at the girder seats. Two gages were installed on the underside of the deck in the Spillway Section. In addition, strain gages were installed on the top and bottom faces of the arch along with two gages installed on the downstream face to measure the axial strain and also any primary bending moment strains that may develop within the arch segments. The spandrel columns had three gages installed at midheight, one gage on each of the following faces: south, east, and west to measure the axial strain and any bending moment strains that may develop in the column.

LOAD TESTING RESULTS

The recorded strains were generally very small with measured values typically below 5 microstrain (με) for the majority of the gages. Floorbeam 2 in the Non-Overflow Section had tensile strain values from 31 με to 115 με. These values were within the expected range for the load configuration on the structure. After comparing the measured strain values to the three-dimensional models, it was observed that the deck most likely provides additional stiffness and a small negative moment is developed at the ends of the floorbeams. To account for this additional stiffness, plate elements were added into the model. The remaining floorbeams in the Spillway and Arch Sections that were tested showed values that were deemed insignificant; therefore, it was assumed that the floorbeams in these sections would exhibit a similar response to the Non-Overflow Section due to the comparable arrangement of reinforcement and construction methods. The strain gages installed at the ends of the floorbeams typically recorded small strain values with the several gages in the Non-Overflow Section measuring compressive strains between 20 με and 31 με at the bottom of the floorbeam. This suggests that a small negative moment also develops at these floorbeam ends. A partial joint release was provided at the ends of the floorbeams to replicate these measured strains and be within the negative moment capacity of the floorbeams.

The gages installed on the longitudinal girders recorded small strain values typically less than 5 με. These values were deemed insignificant and were not considered when calibrating the model. The small measured values might be due to the additional stiffness added by the large barrier and curb section, unintended arching action from the bearings being locked, or the debonding of the steel reinforcement to the concrete cover. The arch members instrumented typically showed insignificant strain readings, similar to the longitudinal girders. The preliminary capacity to demand ratios calculated for the longitudinal girders and the arch segments suggest that there was sufficient capacity within the members and no additional stiffness was needed from the barrier or curb. Therefore,

any additional stiffness that the barrier and curb were providing were neglected in the calibration of the structural model.

STRUCTURAL MODEL

A three-dimensional model was created for each section utilizing the structural analysis software STAAD.Pro. Beam elements were used to model the floorbeams, longitudinal girders, arch segments, and spandrel columns. Member section properties were assigned to each beam element based on the information provided in the existing plans. Plate elements were used to model the deck. Both fixed and partial joint releases were used to model the various beam element end restraints in order to calibrate the model to resemble the load testing data.

CAPACITY TO DEMAND RATIOS

Based on the results of the load tests, engineering judgment, and the MBE, a three-dimensional model was created for each section and capacity demand ratios were calculated for the following trucks: HS20, Type 3-3, and EV3 **(see Figure 2)**. Each section was loaded with two trucks positioned to maximize the load effects. In accordance with the FHWA memo dated November 3, 2016 regarding rating of the EV3, a single EV3 was positioned in one lane and a Type 3-3 truck positioned in the other. The dead load and live loads were factored by 1.3 and a 30% impact factor was included with the live loads.

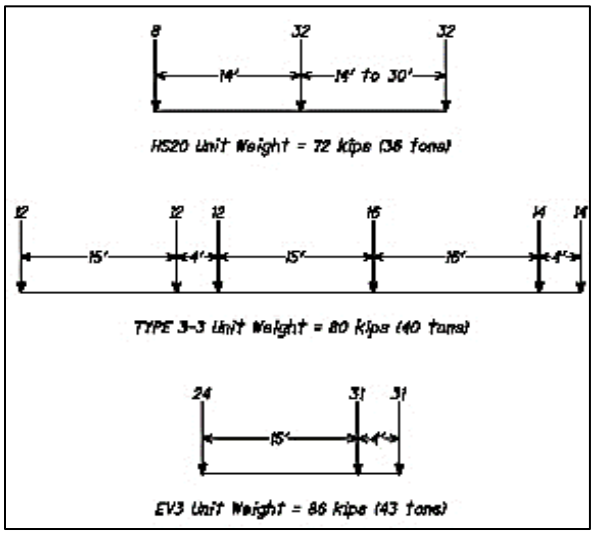

Figure 2 – Typical vehicle configurations of the HS20, Type 3-3 and EV3 used for the analysis.

The member capacities were calculated based Load Factor Rating (LFR) per the MBE. Material strengths were taken from the MBE (based on the year of construction) and also based on the material testing on the structure that was performed by the Oklahoma Department of Transportation (ODOT) in 2018. A concrete compressive strength (f'_c) of 2.5 ksi and a reinforcement yield strength (f_y) of 40 ksi was assumed. The concrete compressive strength was taken from the MBE due to the variance in the material testing results. The steel testing results were fairly consistent; therefore, the reinforcement yield strength was based upon the steel testing. Capacity to demand ratios were calculated for each member at the areas of maximum moment and maximum shear. The members' controlling capacity to demand ratio for the spans tested is shown in **Tables 1 – 3**. For the HS20 and AASHTO Type 3-3 vehicles, all capacity to demand ratios are above 1.0 for each members. The EV3 rating is governed by the shear capacity of the floorbeams in all the spans.

Table 1 - Pensacola Dam Load Testing - Non-Overflow Section					
Truck	Member	Location	Capacity	Demand	C/D Ratio
HS20	Roadway Girder	Midspan (+ M)	2102 (k-ft)	1678 (k-ft)	1.25
	Sidewalk Girder	At Support (V)	113 (k)	74 (k)	1.52
	Exterior Floorbeam	At Support (V)	55 (k)	52 (k)	1.05
	Interior Floorbeam	At Support (V)	55 (k)	52 (k)	1.05
AASHTO TYPE 3-3	Roadway Girder	Midspan (+ M)	2102 (k-ft)	1389 (k-ft)	1.51
	Sidewalk Girder	At Support (V)	113 (k)	54 (k)	2.09
	Exterior Floorbeam	At Support (V)	55 (k)	36 (k)	1.51
	Interior Floorbeam	At Support (V)	55 (k)	37 (k)	1.49
EV3	Roadway Girder	Midspan (+ M)	2102 (k-ft)	1912 (k-ft)	1.10
	Sidewalk Girder	At Support (V)	113 (k)	99 (k)	1.14
	Exterior Floorbeam	At Support (V)	55 (k)	73 (k)	**0.75**
	Interior Floorbeam	At Support (V)	55 (k)	74 (k)	**0.74**

Table 2 - Pensacola Dam Load Testing - Spillway Section					
Truck	Member	Location	Capacity	Demand	C/D Ratio
HS20	Roadway Girder	Midspan (+ M)	2102 (k-ft)	1673 (k-ft)	1.26
	Sidewalk Girder	Midspan (+ M)	2487 (k-ft)	1609 (k-ft)	1.55
	Exterior Floorbeam	At Support (V)	55 (k)	50 (k)	1.10
	Interior Floorbeam	At Support (V)	55 (k)	50 (k)	1.09
AASHTO TYPE 3-3	Roadway Girder	Midspan (+ M)	2102 (k-ft)	1380 (k-ft)	1.52
	Sidewalk Girder	Midspan (+ M)	2487 (k-ft)	1491 (k-ft)	1.67
	Exterior Floorbeam	At Support (V)	55 (k)	34 (k)	1.59
	Interior Floorbeam	At Support (V)	55 (k)	35 (k)	1.56
EV3	Roadway Girder	Midspan (+ M)	2102 (k-ft)	1913 (k-ft)	1.10
	Sidewalk Girder	At Support (V)	279 (k)	232 (k)	1.20
	Exterior Floorbeam	At Support (V)	55 (k)	70 (k)	**0.78**
	Interior Floorbeam	At Support (V)	55 (k)	71 (k)	**0.77**

Table 3 - Pensacola Dam Load Testing - Arch Section							
Truck	Member	Location	Capacity		Demand		C/D Ratio
HS20	Arch	Arch Segment 3	350 (k)	270 (k-ft)	259 (k)	199 (k-ft)	1.35
	Column	Column 3	108 (k)	95 (k-ft)	36 (k)	31 (k-ft)	3.03
	Sidewalk Girder	Main Girder (V at seat)	176 (k)		170 (k)		1.04
	Floorbeam 1, 10	At Support (V)	53 (k)		51 (k)		1.03
AASHTO TYPE 3-3	Arch	Arch Segment 3	350 (k)	270 (k-ft)	259 (k)	199 (k-ft)	1.35
	Column	Column 3	108 (k)	95 (k-ft)	36 (k)	31 (k-ft)	3.03
	Sidewalk Girder	Main Girder (V at seat)	176 (k)		146 (k)		1.20
	Floorbeam 1, 10	At Support (V)	53 (k)		40 (k)		1.31
EV3	Arch	Arch Segment 1	329 (k)	455 (k-ft)	341 (k)	471 (k-ft)	**0.97**
	Column	Column 5	115 (k)	97 (k-ft)	51 (k)	43 (k-ft)	2.25
	Sidewalk Girder	Main Girder (V at seat)	176 (k)		179 (k)		**0.98**
	Floorbeam 1, 10	At Support (V)	53 (k)		72 (k)		**0.73**

The deck was also evaluated through the load testing. Two strain gages were installed along the centerline of the roadway on the underside of the deck between Floorbeams 2 and 3 in the Spillway Section. One gage was installed longitudinally and the other transversely to the roadway in order to determine if the slab was behaving more like a two-way slab. The load testing data showed small measured strains in both the longitudinal and transverse directions with the measurements primarily being in compression in the longitudinal direction and tension in the transverse direction. The data does not correspond to conventional beam theory but as the MBE states in Section C6.1.5.1 the primary structural action of concrete decks is internal arching or membrane action and not flexure as shown by laboratory testing data. Therefore concrete decks typically have significant reserve strength and decks carrying normal traffic satisfactorily do not need to be routinely evaluated for load capacity. A simplified approach was used to calculate the capacity to demand rations based on the flexural capacity of a unit width strip of the deck. Capacity to demand ratios for the deck are shown in **Table 4**. Currently the deck condition rating is in satisfactory [6 – NBIS] and shows no signs of structural distress with several tandem axle dump trucks and special haul vehicles observed crossing the structure during the load tests.

Table 4 - Pensacola Dam Load Testing - Deck

Loading	Location	Capacity	Demand	C/D Ratio
HS20	Midspan (+M)	9.54 (k-ft)	10.95 (k-ft)	**0.87**
HS20	At Support (-M)	8.29 (k-ft)	5.90 (k-ft)	1.41
Type 3-3	Midspan (+M)	9.54 (k-ft)	5.83 (k-ft)	1.63
Type 3-3	At Support (-M)	8.29 (k-ft)	4.43 (k-ft)	1.87
EV3	Midspan (+M)	9.54 (k-ft)	11.36 (k-ft)	**0.84**
EV3	At Support (-M)	8.29 (k-ft)	8.55 (k-ft)	**0.97**

CONCLUSIONS

Based on the results of the structural analysis of the three spans and the various loading configurations the structure is adequate to carry the HS20 and Type 3-3 loadings. A slight overstress of approximately 27% was calculated with the EV3 loading. The deck capacity to demand ratios were typically below 1.0 but due to the satisfactory condition of the deck and no signs of structural distress, the deck would not need to be rated per the MBE. As such, the capacity of the primary structural members is sufficient to carry typical vehicular and truck traffic.

If you have any questions, comments, or need further information, please feel free to contact me at (816) 854-9662 (mobile), (816) 329-8676 (office), or mjjohnson@transystems.com.

Sincerely,

Matt Johnson

Matt Johnson, PE, SE
Senior Professional/Assistant Vice President

APPENDIX E

Updated NEPA Study Limits

NEPA Study Area (Sheet 1 of 5)

Project No. 41806

SH 28: Bridge Widening and Rehabilitation in Mayes County

NEPA Study Area
Improvement Centerline
Section Line
NHD Stream
Match Line

Data Sources: OSU CSA (2017), NHD (2014)
Aerial Source: DigitalGlobe (2016)

Prepared for: Benham, GRDA	1 in = 200 feet
	Scale: 1:2,400
	Date: 2/13/2019

G:\Projects\OklahomaOffice\GRDA\Benham\NEPA Study Area_20190213.mxd

NEPA Study Area (Sheet 2 of 5)
Project No. 41806
SH 28: Bridge Widening and Rehabilitation in Mayes County

NEPA Study Area
Improvement Centerline
Section Line
NHD Stream
Match Line

Data Sources: OSU CSA (2017), NHD (2014)
Aerial Source: DigitalGlobe (2016)

Prepared for: Benham, GRDA	1 in = 200 feet
	Scale: 1:2,400
	Date: 2/13/2019

G:\Projects\OklahomaOffice\GRDA\Benham\NEPA Study Area_20190213.mxd

NEPA Study Area (Sheet 3 of 5)
Project No. 41806
SH 28: Bridge Widening and Rehabilitation in Mayes County

NEPA Study Area
Improvement Centerline
Section Line
NHD Stream
Match Line

Data Sources: OSU CSA (2017), NHD (2014)
Aerial Source: DigitalGlobe (2016)

Prepared for: Benham, GRDA	1 in = 200 feet
	Scale: 1:2,400
	Date: 2/13/2019

G:\Projects\OklahomaOffice\GRDA\Benham\NEPA Study Area_20190213.mxd

NEPA Study Area (Sheet 4 of 5)

Project No. 41806

SH 28: Bridge Widening and Rehabilitation in Mayes County

NEPA Study Area
Improvement Centerline
Section Line
NHD Stream
Match Line

Data Sources: OSU CSA (2017), NHD (2014)
Aerial Source: DigitalGlobe (2016)

Prepared for: Benham, GRDA	1 in = 200 feet
	Scale:1:2,400
	Date: 2/13/2019

G:\Projects\OklahomaOffice\GRDA\Benham\NEPA Study Area_20190213.mxd

NEPA Study Area (Sheet 5 of 5)
Project No. 41806
SH 28: Bridge Widening and Rehabilitation in Mayes County

NEPA Study Area
Improvement Centerline
Section Line
NHD Stream
Match Line

Data Sources: OSU CSA (2017), NHD (2014)
Aerial Source: DigitalGlobe (2016)

Prepared for: Benham, GRDA	1 in = 200 feet
	Scale: 1:2,400
	Date: 2/13/2019

G:\Projects\OklahomaOffice\GRDA\Benham\NEPA Study Area_20190213.mxd

APPENDIX F

Updated Alternatives Analysis

ALTERNATIVES ANALYSIS

PENSACOLA DAM AND SPILLWAYS

DESCRIPTION OF PROJECT SCOPE

The purpose of the project is to extend the life of three bridges carrying State Highway 28 (SH-28) over the Grand Neosho River in Mayes County, Oklahoma. The bridge structures cross the Pensacola Dam and Spillways constructed in 1938–1940 and require substantial rehabilitation to continue serving the needs of Grand River Dam Authority (GRDA), the Oklahoma Department of Transportation (ODOT), and the adjoining communities. GRDA and ODOT are committed to restoring the strength of the aging structures and are coordinating their efforts in order to minimize the impacts of the rehabilitation to the public.

The main bridge and auxiliary bridges cross the Pensacola Dam and Spillways. The Dam includes a hydroelectric powerhouse at the west end, supplying electricity to Northeastern Oklahoma. The intake structures for the powerhouse take water from the upstream portion of the lake through the arch structures, and into the powerhouse. The spillway sections are used to control the lake level, for recreational use of the lake as well as for flood control on the Grand Neosho River system. A platform is located on the upstream side of the spillway, allowing a gantry crane to traverse the length of the spillway to raise and lower the gates, and also to raise and lower stoplogs to close a section of the spillway for maintenance of the gate and/or spillway.

Working from west to east, the main bridge is identified by three primary sections based on the type of support from the dam: (1) Arch Section, supported by the arches forming the dam on the bridge; (2) Spillway Section, supported by piers extending upwards through the main spillway; and (3) Non-Overflow Section, supported by piers extending up from a gravity dam.

The two bridges over the Auxiliary Spillways are supported by the same construction as the main Spillway Section. They do not have arch or non-overflow sections.

The dam and spillways on which the bridges are located are components of the National Register of Historic Places (NRHP) - listed Pensacola Dam Historic District. As such, the proposed project is being carefully planned to preserve the character and aesthetic of the bridges, as well as to avoid or minimize adverse effects to the historic district. Although the proposed project has not yet been classified as a federal action to which Section 106 of the National Historic Preservation Act would pertain, the application of the Criteria of Adverse Effect, in accordance with 36 CFR 60 and 36 CFR 800.11, provides a useful framework for the discussion below about how each of the proposed alternatives may affect the Pensacola Dam Historic District.

EXISTING CONDITIONS

Main Bridge over Pensacola Dam (NBI 27569)

The main bridge over Pensacola Dam was last inspected during the routine inspection cycle in October 2018. The concrete bridge decks on the Arch Section, Spillway Section, and the Non-Overflow Section are integral with the superstructure members. The bridge deck is covered with an asphaltic overlay that has extensive deterioration throughout the length of the bridge. The overlay has been patched in multiple locations in both driving lanes. The deck joints are leaking, which has caused the superstructure elements to show signs of water deterioration. The deck soffit, the underside surface of the bridge deck, is in good condition, with minor spalls and efflorescence present. The deck drains in the Arch Section drain onto the superstructure members. The water has discolored the concrete at the drainpipe locations.

The superstructure on Arch Section, Spans 1 to 51, consists of the reinforced concrete deck supported by transverse floor beams. The floor beams are supported by spandrel arches and a continuous longitudinal reinforced concrete beam. The spandrel arches tie into the buttresses of the dam. The continuous longitudinal beams rest on the buttresses.

The buttresses were not inspected as part of the October 2018 inspection; therefore, the buttress condition is unknown at this time. The dam has minor spalls and scaling. Minor spalling is present on the arches below the expansion joints. Span 19 has a moderate spall on the spandrel arch. Discoloration and scaling are present on the arches and longitudinal beams from water as a result of the deck drain flow. The longitudinal concrete beams have hairline cracking at various locations. The cracks are more frequent near midspan. The location along the beams indicate that stress from live-load could be the source of the cracking. The hinge locations approximately 7 feet from end of arch bearing points at beam ends on the continuous longitudinal beams have shear cracks. Despite these spalls and cracks, the spandrel arches and longitudinal concrete beam are in satisfactory condition.

The transverse floor beams at the expansion joints for Spans 1 to 51 are in fair condition. The floor beams typically show water discoloration, cracking, spalls, scaling, and some delamination. The floor beams have been repaired in the past. The previous floor beam repairs consisted of patching spalls, adding galvanized steel angle to the top of beams and adding bearing pads. The bearing pads have failed and are no longer in position. The transverse beams in between expansion joints are in good condition.

At the Spillway Section and Non-Overflow Section, Spans 52 to 83, the superstructure consists of the reinforced concrete deck supported by transverse floor beams. The longitudinal beam spans rest on piers. The pier caps for these spans have minor spalls. The east abutment has moderate spalls and cracking on the face of the seat. The floor beams are supported by longitudinal reinforced concrete beams. The longitudinal concrete beams are in good condition. Water discoloration is present, but no major deterioration is present. The transverse floor beams for longitudinal beam spans 52 to 83 are in good condition with minor spalls.

In addition to the existing conditions discussed above, the bridge is currently load posted for 16 tons for a single two-axle truck, 29 tons for a single trailer (three-axle truck), and 45 tons for double-trailer units. A simplified calculation for the deck strength resulted in the deck controlling the load rating of the bridge.

A load testing program was conducted in November 2018 to update the load rating of the bridge. The bridge was observed to carry dump trucks, concrete trucks, and other loads over the posted limit; however, the bridge did not exhibit the anticipated corresponding distress from such loads.

The Load Testing plan conducted static load tests on each of the three sections of the bridge. Strain gauges were placed on the various members on the underside of the bridge, and trucks of known axle loads were stopped at key locations to allow capture of the strain data. These strains were then used to calibrate 3-D structural models to match the load testing results. Following the calibration, the models were used to determine the capacity of the bridge to carry various load rating trucks, and to identify the locations where strengthening is necessary to accommodate the H20 truck weighing 20 tons and the HS20 truck weighing 36 tons.

Additionally, materials testing was performed just prior to the load testing. Two concrete specimens tested between 2900 and 3000 psi, resulting in a reduction in concrete compressive strength from the 4000 psi used in the initial load rating computations to 2500 psi. Despite the lower concrete strength used in the new load rating computations, the bridge performed significantly better under load testing than the previous simplified calculations.

The preliminary load testing analysis demonstrates that the bridge carries the Type 3-3 truck with ease. The floor beams, longitudinal girders, and arch accommodate the H20 and HS20 trucks. The deck load test indicated the deck can accommodate the H20 and HS20 trucks. The federal Fixing America's Surface Transportation (FAST) Act, enacted in 2015, requires load ratings for an emergency vehicle, designated EV2 and EV3, and a dump truck with drop-axles, designated SNV NRL. The bridge does not have sufficient capacity to accommodate the 43-ton EV3 truck without strengthening the floor beams for shear, and certain floor beams within the Arch Section for moment. The deck and upstream longitudinal girder would likewise require strengthening to accommodate the EV3 truck.

Upon further review of the load testing analysis and consideration of the bridge lack of distress under 33 to 36-ton trucks using the bridge daily, ODOT and GRDA have agreed to raise the load limit of the bridge to 36 tons, without additional strengthening. The agencies concur that strengthening the bridge to accommodate the EV3 truck would encourage semi-trailers to begin using the bridge, which is undesirable. As a result, the rehabilitation efforts will concentrate on replacing the hinges on the upstream longitudinal girder and repairing spalls and cracks as necessary. No strengthening efforts will be included in the rehabilitation design.

Grand Lake Spillway Bridges (NBI 29642, 29645)

The bridges over the Auxiliary Spillways were last inspected during the routine inspection cycle in October 2018. The concrete bridge decks on the reinforced concrete girder spans are integral with the superstructure members. The bridge decks are covered with an asphaltic overlay that has extensive deterioration throughout the length of the bridge. The overlay has been patched

in multiple locations. The bridge decks have visible spalls and scaling. The deck joints are filled with debris and are leaking, which has caused the superstructure elements to show signs of water deterioration. The deck drains drain onto the superstructure members. The water has discolored the concrete at the drainpipe locations.

The superstructures consist of the reinforced concrete deck that is integral with the longitudinal beam and transverse floor beam system. The longitudinal girders and floor beams have some hairline cracks and spalls. The beams have discoloration from the deck drains. The superstructures of the spillway bridges are in satisfactory condition.

The substructures of the spillway bridges consist of reinforced concrete abutments and piers. The substructures are in fair condition. The pier caps below the expansion joints have water staining, minor spalls and cracks.

As with the main bridge over the Pensacola Dam, the spillway bridges are currently load posted for 16 tons for a single two-axle truck, 29 tons for a single trailer (three-axle truck), and 45 tons for double-trailer units. As a result of the load testing program, the load limit of the bridge will be raised to 36 tons without additional strengthening.

HISTORIC PRESERVATION AND CULTURAL RESOURCES

Significance of Pensacola Dam Historic District

The Pensacola Dam Historic District is listed in the National Register of Historic Places under Criterion C as an excellent example of multiple arch dam engineering. With 51 arches, the dam is the longest multi-arch dam in the United States, the only Oklahoma example of a multi-arch dam, and the state's first hydroelectric dam. The historic district comprises two contributing buildings (the powerhouse and substation) and four contributing structures (the dam, two spillways, and the pumping/intake structure), and one non-contributing building: the observation house. The dam and spillways carry SH-28 on bridges incorporated into the structures. Components of the historic district, such as the buildings and the bridge railings, reflect the Streamline Moderne architectural style.

Description of Pertinent Components

The following provides a description of the components pertinent to the proposed project. For description of other components within the Pensacola Dam Historic District, see the National Register of Historic Places nomination available through the Oklahoma State Historic Preservation Office's website.

Constructed between 1938 and 1940, the Pensacola Dam complex is located on the Grand Neosho River, which is a major contributor to the Arkansas River basin. The underlying limestone and chert of the river channel's bottom made for the ideal foundation for the dam. The top of the dam is 150 feet above the channel bottom and is 6,565 feet long, including the spillways. The arched section of the dam comprises 51 barrel arches that are each 140 feet in height. The clear span width of each arch is 60 feet at the base and 24 feet at the top. They rest on double-wall hollow buttresses that are 84 feet center to center. The three spillways are gravity-type gated spillways that are shaped in an elongated S fashion, or ogee, from gate to river bottom. At 861 feet in length, the main spillway is incorporated into the east end of the dam. The two smaller spillways (Auxiliary Spillways) are located less than a mile east of the dam.

The SH-28 bridges have a 20-foot-wide bridge and a 4-foot-wide sidewalk along the upstream side. On the dam section, girders rest on top of spandrel arch barrels to support the bridge on the upstream side, and open spandrel arches extend between the buttresses to support the bridge on the downstream side. Over the spillways, the bridges have concrete girders.

Character-defining Features

When considering a proposed project's effects on a historic property, establishing the character-defining features is important. Character-defining features are the distinctive and visible aspects, qualities, or characteristics of a historic property that convey its significance. Character-defining features may include engineering design, and structural and decorative details. Historic fabric may also be an important consideration. Historic fabric may be a character-defining feature, but it can also be found on other elements of a historic property that are not identified as character-defining.

The Pensacola Dam Historic District is significant as the only multi-arch dam in Oklahoma, the longest multi-arch dam in the United States, and the state's first hydroelectric dam. As such, the following are the character-defining features of the historic district:

- 51 arches comprising the dam
- Overall length of the dam and spillways
- System composed of the dam, powerhouse, intake/pumping structure, and substation to generate electricity

While the bridges that are subject to the proposed rehabilitation and widening project are not character-defining features of the historic district, they are elements of the district's historic fabric, and thus, must be considered when developing the plans for the proposed project. The application of the Secretary of the Interior's *Standards for Treatment of Historic Properties* (SOI Standards) discussed in the next section are also an important component of the project planning process.

Applying the Secretary of the Interior's *Standards for Treatment of Historic Properties*

The SOI Standards provide guidance on how to preserve, rehabilitate, restore, and reconstruct historic properties. In the case of the proposed SH-28 rehabilitation and widening project, the SOI Standards for rehabilitating historic properties are most applicable. Compliance with the SOI Standards provides for the preservation of the Pensacola Dam Historic District's integrity while accommodating the rehabilitation and widening of the bridges. The SOI Standards for Rehabilitation are summarized below:

1. A property will be used as it was historically or be given a new use that requires minimal change to its distinctive materials, features, spaces, and spatial relationships.
2. The historic character of a property will be retained and preserved. The removal of distinctive materials or alteration of features, spaces, and spatial relationships that characterize the property will be avoided.
3. Each property will be recognized as a physical record of its time, place, and use. Changes that create a false sense of historical development, such as adding conjectural features or elements from other historic properties, will not be undertaken.
4. Changes to a property that have acquired historic significance in their own right will be retained and preserved.
5. Distinctive materials, features, finishes, and construction techniques or examples of craftsmanship that characterize a property will be preserved.
6. Deteriorated historic features will be repaired rather than replaced. Where the severity of deterioration requires replacement of a distinctive feature, the new feature will match the old in design, color, texture, and where possible, materials. Replacement of missing features will be substantiated by documentary and physical evidence.
7. Chemical or physical treatments, if appropriate, will be undertaken using the gentlest means possible. Treatments that cause damage to historic materials will not be used.

8. Archeological resources will be protected and preserved in place. If such resources must be disturbed, mitigation measures will be undertaken.
9. New additions, exterior alterations, or related new construction will not destroy historic materials, features, and spatial relationships that characterize the property. The new work will be differentiated from the old and will be compatible with the historic materials, features, size, scale and proportion, and massing to protect the integrity of the property and its environment.
10. New additions and adjacent or related new construction will be undertaken in such a manner that, if removed in the future, the essential form and integrity of the historic property and its environment would be unimpaired.

Each of these standards has been taken into account in the development of the proposed rehabilitation and widening projects.

Alternatives Analysis

The alternatives analysis includes the proposed rehabilitation and three alternatives for widening SH-28 over Pensacola Dam and Spillways. Each widening alternative would increase the clear roadway from 19'-10" to 24'-0". Widening to the upstream and downstream were considered. Structural members were sized for the Arch Section, Main Spillway, Non-Overflow Section, and Auxiliary Spillways for each of the three alternatives. Factors taken into consideration during development of the widening alternatives include the following:

- Aesthetic concerns, particularly regarding the visual impact of the bridge railing, arched sections, and spillway piers.
- Available means of construction; the existing bridge is narrow and construction activities may share the roadway with traffic. Short-term closures of the roadway will be required. Specialized equipment and techniques for working above the powerhouse, arches, and spillways will be required.
- Use of precast or prefabricated components to reduce onsite construction time.
- Use of components and techniques that limit the weight of new construction.
- Construction should not obstruct operations of the powerhouse and spillways for any of the alternatives.
- Demolition of existing bridge parapet(s) will be evaluated for the cut-line for tie-in to the existing deck, as well as the effect of removal of the existing parapets on the buttresses, piers, and abutments at each end of the bridge.
- Cost of construction

Although the proposed project may not ultimately be classified as federal undertaking to which Section 106 of the National Historic Preservation Act would pertain, the application of the Criteria of Adverse Effect, in accordance with 36 CFR 60 and 36 CFR 800.11, provides a useful framework for understanding how each of the proposed alternatives may affect the Pensacola Dam Historic District. To assess the potential direct and indirect effects, the rehabilitation and three widening alternatives are presented below with a discussion on how each alternative may or may not impact the seven aspects of integrity—location, design, setting, materials, workmanship, feeling,

and association—used by the National Park Service to measure a property's ability to convey its historic significance.

- **Rehabilitation Alternative**

  GRDA and ODOT share responsibility for the maintenance of the three bridges. ODOT maintains the driving surface of the bridges between the curbs. GRDA owns and maintains the remainder of the bridge at each location. Additionally, GRDA owns and is responsible for the hydroelectric powerhouse at the west end of the main dam, and the dam itself and its spillways and operations.

  ODOT is preparing plans for the deck rehabilitation. The plans will specify that automated water
  jets will be used to remove unsound concrete from the upper surface of the deck (hydroblast). The depth of the concrete removal is dependent upon the integrity of the deck at each location. With the extent of deterioration on these bridges, the concrete removal may extend from 1 inch to possibly 4 or 5 inches in depth. The removed concrete will then be replaced with a concrete overlay, with a new top mat of reinforcing. The deck joints will be cleaned and sealed to prevent moisture from leaking onto the superstructure below the deck.

  GRDA will prepare plans for the rehabilitation of the remainder of the bridge, as part of this design contract. Spalls in the deck soffits, transverse floor beams, longitudinal beams, spandrel arches and substructure elements will be repaired by removing deteriorated concrete and applying pneumatically placed mortar. Exposed reinforcing steel at spall locations will be cleaned
  and corrosion inhibitor applied to prevent further deterioration. Cracks that require repair will be cleaned, deteriorated concrete removed, and injected with epoxy resin. Additionally, key locations will be restored with a carbon fiber material which is adhered to the concrete with an
  epoxy resin, a process called Carbon Fiber Reinforced Polymer (CFRP). Deck drains will be improved by installing angled pipes to move water away from the superstructure elements below the deck. In development of the design to strengthen the structures to remove the load posting, several alternatives were considered and dismissed, as follows:

  1. Thicken the existing deck – the deck would have to be double the existing thickness to provide sufficient strength but that would increase the overall load of the structures too much;
  2. Fully replace the deck – this option would entail removal and reconstruction of all elements of the deck, including the railing, sidewalks, etc. However, it would be very expensive and would not meet the SOI Standards, thus resulting in an adverse indirect effect to the historic property; and

  3. Add floor beams between the existing floor beams, as described in the Supplemental Report dated July 18,2018.

The majority of the rehabilitation of the bridges other than the driving surface can be accomplished from the underside of the bridges, with minimal interference with traffic on the highway. Work platforms are anticipated to be suspended underneath the bridges using rigging attached to the parapets or supported by scaffolding from the downstream side of the dam, allowing access to the entire span as needed. Materials can be lowered over either side of the bridges to the platforms or lifted from the downstream side of the dam.

The catwalks in the spillway portion of the main structure have localized damage in need of repair. The supporting structure under the ends of some catwalks is spalling and requires the removal of existing unsound concrete and replacement with new concrete. The supports for handrails in some locations require similar removal and replacement.

Evaluation of the bearing system at the hinges and beam supports will be performed during preparation of the plans. Suitable details will be developed to restore their proper function. Provisions will be made for the patching of concrete spalls or the epoxy injection of cracks at isolated locations along exposed areas of the dam. These will be identified during the rehabilitation project and repaired accordingly.

The bridges are currently load posted for 16 tons for a single truck, 29 tons for a single trailer, and 45 tons for double-trailer units. As a result of the load testing program, the load limit of the bridge will be raised to 36 tons without additional strengthening.

<u>Application of Criteria of Adverse Effect</u>

The Criteria of Adverse Effect were applied to the proposed rehabilitation discussed above. It is recommended the proposed rehabilitation would pose no adverse direct effect and no indirect effect to the character-defining features for which the Pensacola Dam Historic District is significant. The following discusses the analysis with regard to each aspect of historic integrity.

Location – As a result of the rehabilitation alternative, there would be no change in location for the Pensacola Dam Historic District as a whole or for any of the contributing resources within the district. As such, integrity of location would not be diminished.

Design – The proposed rehabilitation alternative would not adversely affect the Pensacola Dam Historic District's integrity of design. The proposed rehabilitation would not change the form, plan, space, structure, and style of the overall historic property. Furthermore, there would be no impact to the functions and technologies of the historic property.

Setting – The proposed rehabilitation alternative would not have an effect on the historic property's integrity of setting. There would be no change to the environment in which the historic property is located or its relationship to surrounding features and open space. Thus, integrity of setting would not be diminished.

Materials – The proposed rehabilitation alternative would have no adverse effect on the Pensacola Dam Historic District's integrity of materials. Repairs to the spalling concrete would be completed in-kind, and strategies to blend the new concrete with the old concrete in color and texture would be employed. Likewise, strategies would be

employed to blend the very thin material of the fiber-reinforced polymer with the adjacent concrete so that the material would be barely discernable, especially at the distance from which it would be viewed (the material would be applied to bridge members that are not visible to the traveling public or pedestrians, but rather are only visible from the ground below the dam on the downstream side). The proposed rehabilitation alternative would follow the SOI Standards, particularly Standard No. 6, and integrity of materials would not be diminished to such a degree that the historic property could no longer convey its significance.

Workmanship – As with integrity of materials, the proposed rehabilitation alternative would have no adverse effect on the historic property's integrity of workmanship. Repairs to areas of spalled concrete and application of the fiber-reinforced polymer would not obscure or diminish the features and evidence of the builders' labor and skill in constructing the Pensacola Dam and its associated structures. Per the SOI Standards, spalled concrete repairs would be completed in-kind, and strategies would be employed to blend the repaired areas and areas where the CFRP would be applied with the adjacent concrete. While there would be minor effects to integrity of workmanship, the effects would not rise to such a degree that the historic property could no longer convey its significance.

Feeling – As with integrity of association, there would be no effect to the character-defining features of the historic property. Therefore, integrity of feeling would not be diminished.

Association – The proposed rehabilitation alternative would not sever the direct link between the historic district and its contributing resources with the engineering significance they convey. Furthermore, the proposed rehabilitation would not affect the character-defining features of the historic property. Thus, integrity of association would not be diminished.

As discussed above, the proposed rehabilitation would not diminish any aspects of the Pensacola Dam Historic District's integrity to such a degree that it could no longer convey its engineering significance. Therefore, the proposed rehabilitation would pose no adverse effect to the historic property. Additionally, the proposed rehabilitation would pose no indirect effect to the historic property.

- **Widening Alternative 1, Downstream Side**

The Widening Alternative 1 design removes the existing downstream curb and parapet and widens downstream by 4'-6" to obtain two 12' lanes. One additional longitudinal beam line is proposed to be added to support the downstream edge of the new slab and the new parapet. Beam supports would tie into each arch buttress or pier as applicable, depending on location. Construction on the downstream side would not negatively affect stability of the dam. The public view of the dam from the downstream side is not primary, as the downstream side is more secluded and has less public access. However, the Arch Section of the dam and the powerhouse are visually exceptional. Special consideration of the aesthetics for the new

barrier and buttress tie-in would be required. The upstream parapet, sidewalk and curb would not be affected or modified.

In addition to the rehabilitation described above, two preliminary designs were developed; one for the Arch Section of Pensacola Dam, and another design for the Non-Overflow and all spillway sections. The design summaries follow.

- Arch Section (84'-0" span)

  Proposed Preliminary Member Sizes, Downstream

  - Precast Spandrel Arch
  - Arch support is a triangular-shaped corbel that extends along the full width of the buttress face and approximately 5' on the sides
  - Use rail rated with a TL-2 test level for a maximum vehicle speed of 45 mph

  Design Progression

  The design approach for the Arch Section keeps the distinctive arch, a feature that provides the dam's elegance and character, as visible as possible. Efforts were made to minimize the beam depth to maintain visibility of the existing arch. Prestressed box beams were investigated, with depths as shallow as 20 inches. However, the prestressed box beams would most likely be fabricated in Texas and cost approximately three times that of an ODOT prestressed concrete beam. Due to the high cost, this beam type was abandoned and a Type III beam was considered. The depth of the Type III beam, 3'-9", allows the existing arch to be visible, although not prominent.

  The location of the existing expansion joints is not at the spans' ends. As the design progressed, it was determined that the original 1938 segmental beam configuration needed to be approximated to minimize the differential movements and deterioration in the deck. Therefore, a 33"×20" (height × width) beam was selected, as the Type III beam cannot be segmentally constructed and supported.

  During a preliminary meeting with the SHPO on October 11, 2017, Cox|McLain and Benham staff discussed the aesthetics of widening to the downstream side, and the visual impact of the widening on the Arch Section in particular. It was agreed that maintaining visibility of the dam arches is highly desirable.

  Therefore, a precast arch beam was selected for the downstream widening at the Arch Section. The arch and spandrels are proposed to be tied into the existing structure and supported by a corbel that is mechanically connected into the face of the buttress. Our investigation determined that precast concrete fabricators are able to fabricate the spandrel arches economically. The arches would be lifted into place using cranes, which would be positioned at ground level on the downstream side of the dam. Two 110-ton cranes would be required to place the precast arches due to the height and reach required to place the arches in the area of the powerhouse.

- Non-Overflow and Spillway Sections (41'-0" simple spans)

  Proposed Preliminary Member, Downstream

  - Type IV prestressed beam
  - Beam support is a triangular-shaped corbel that extends along full width of pier face
  - Use rail rated with a TL-2 test level for a maximum vehicle speed of 45 mph

  Design Progression

  The Main Spillway, Non-Overflow and Auxiliary Spillway sections all have identical span lengths, therefore the same beam design is proposed. Although the design span is not long (41 feet), a Type IV prestressed beam is selected in order for the beam support to be connected to the main structural portion of the spillway piers. The aesthetics for this section are not as critical as at the Arch Section, as noted in the discussion with SHPO in 2017.

Application of Criteria of Adverse Effect

The Criteria of Adverse Effect were applied to Widening Alternative 1 discussed above. It is recommended the proposed widening alternative would pose no adverse direct effect and no indirect effect to the character-defining features for which the Pensacola Dam Historic District is significant. The following discusses the analysis with regard to each aspect of historic integrity.

Location – As a result of the widening alternative, there would be no change in location for the Pensacola Dam Historic District as a whole or for any of the contributing resources within the district. As such, integrity of location would not be diminished.

Design – The proposed widening alternative would not adversely affect the Pensacola Dam Historic District's integrity of design. The proposed widening would have no impact on the functions and technologies of the historic property, and would not change the form, space, structure, and overall style of it. However, there would be a minor change in the plan of the bridges that carry SH-28 across the top of the dam and spillways. The proposed widening would increase the width of the three bridges by four feet to the downstream side. The widened sections would be cantilevered off the side of the dam and spillways and would be supported by bracing at the buttresses.

A new railing would be installed on the downstream side of each structure that would be compatible in design to the existing railing but would be obviously new. Several options for the new railing were considered: open concrete parapet, closed concrete parapet, and combination of concrete and steel parapet. After review of potential options, it was determined the Texas Classic Traffic Rail, Type T411 would be a compatible design that is clearly differentiated from the historic railing.

While the widening alternative would be a minor impact to the overall design of the dam and spillways, the widening would not directly affect the historic property's character-defining features and would not affect spatial relationships that characterize the historic

property. The new work would be differentiated from the old and would be compatible with the historic materials, features, size, scale and proportion, and massing. Therefore, integrity of design would not be diminished to such a degree that the Pensacola Dam Historic District could no longer convey its significance.

Setting – The proposed widening alternative would not have an effect on the historic property's integrity of setting. There would be no change to the environment in which the historic property is located or its relationship to surrounding features and open space. Thus, integrity of setting would not be diminished.

Materials – The proposed widening alternative would have no adverse effect on the Pensacola Dam Historic District's integrity of materials. The widened sections would be constructed of concrete and strategies to blend the new concrete with the old concrete in color would be employed to avoid having bright white new concrete. The widened sections would be differentiated from the old but would be compatible with the historic materials. Integrity of materials would not be diminished to such a degree the historic property could no longer convey its significance.

Workmanship –The proposed widening alternative would have no adverse effect on the historic property's integrity of workmanship. As discussed above, the widened sections would be compatible with the historic materials, features, size, scale and proportion, and massing of the existing bridges. While some of the historic features on the buttresses and spandrel columns may be obscured by the new, cantilevered section, and the historic railing would be replaced on the downstream side, these elements are not considered character-defining features of the historic property. Therefore, the effects of the proposed widening alternative do not rise to such a degree the historic property could no longer convey its significance.

Feeling –There would be no effect to the character-defining features of the historic property. Therefore, integrity of feeling would not be diminished.

Association – The proposed widening alternative would not sever the direct link between the historic district and its contributing resources with the engineering significance they convey. Furthermore, the proposed widening would not affect the character-defining features of the historic property because it would not change the length of the dam, directly impact any of the arches, or impact the system's ability to produce hydroelectricity. Thus, integrity of association would not be diminished.

As discussed above, the proposed widening would not diminish any aspects of the Pensacola Dam Historic District's integrity to such a degree that it could no longer convey its engineering significance. While the proposed widening would result in some changes to the design, materials, and workmanship, these changes would not directly impact the historic property's character-defining features. There would be no direct effect on the arches of the dam; there would be no change in the length of the structure; and there would be no impact on the system's ability to produce hydroelectricity. Therefore, the proposed widening would pose

no adverse effect to the historic property. Additionally, the proposed widening would pose no indirect effects to the historic property.

- **Widening Alternative 2, Upstream Side**

  Widening Alternative 2 removes the existing upstream curb, sidewalk, and parapet and widens the bridge by 6'-2" to obtain two 12' lanes. The existing sidewalk is only 4'-0" wide and decreases to about 3'-0” at the light poles. The replacement sidewalk would be reconstructed to 6'-0" wide to accommodate the light poles and an ADA-compliant sidewalk. The primary public view of the dam is from the upstream side. Special consideration of the aesthetics, historic preservation, and pedestrian safety for the new parapet and sidewalk would be required. The downstream parapet and curb would not be affected or improved.

  Widening to the upstream side presents many complications. The upstream side of the bridges have gate hoist structures that are used for the spillway gate operations. Each bridge has a gate hoist platform fitted with rails to allow a gantry crane to move along the spillway to raise and lower the spillway gates, and to allow installation and removal of stoplogs for maintenance. Widening the bridges to the upstream side would require extensive modification to the gate hoists and gantry cranes.

  Several potential suppliers of the replacement hoist system this alternative would require were contacted. The most responsive supplier was the David Round Company, headquartered Ohio. Based on a review of the drawings of the existing equipment and Widening Alternative 2, the David Round representative generally confirmed that it would be possible to replace the existing gate hoists with new hydraulic equipment. Depending on the final specifications for the gate hoists, including the capacity, drive mechanism, control systems, and other details, the representative estimated the cost per gate hoist to be in the $250,000 to $500,000 range. The gantry platform and gantry crane are still required for the stoplog operations and would require a new minimal height gantry crane to provide for clearance to the planned roadway and walkway modifications.

  In addition to the rehabilitation activities described above, two preliminary designs were developed; one for the Arch Section of Pensacola Dam, and another design for the Non-Overflow and all spillway sections. The design summaries follow.

  - <u>Arch Section (84'-0" span)</u>

    <u>Preliminary Member Sizes, Upstream</u>
    - 48"×26" segmental prestressed beam
    - 5'×5' concrete angled brace for widening support located at buttresses
    - Existing arches shall not directly support any new loads
    - Use rail rated with a TL-2 test level for a maximum vehicle speed of 45 mph

Design Progression

Similar to the downstream widening of the arch spans, consideration of the expansion joint location was evaluated, and the upstream beam is proposed to be constructed in segments matching the original upstream beams at the Arch Section.

The additional weight and forces from the widening are not applied to the Arch Section. Instead, a 5'x5' brace that extends from the new upstream beam to the buttress is proposed to transfer the loads to the buttress.

- Non-Overflow and Spillway Sections (41'-0" simple spans)

  Proposed Preliminary Member Sizes, Downstream

  - Type II prestressed beam
  - Beam supports undetermined at this time
  - Due to high costs to modify the gate hoists and gantry crane, Widening Alternative 2 is not practical or economical, and further analysis is not warranted.

  Design Progression

  The shorter, simple spans of the Non-Overflow and Spillways allow for a reasonable beam size.

  An additional option for the upstream widening was considered. Benham proposed to raise the sidewalk over the gate structures to save the cost to modify the gate structures. This option was deemed unacceptable by GRDA and ODOT.

Application of Criteria of Adverse Effect

The Criteria of Adverse Effect were applied to Widening Alternative 2 discussed above. It is recommended the proposed widening alternative would pose an adverse indirect effect to the character-defining features for which the Pensacola Dam Historic District is significant due to the substantial amount of historic fabric that would be removed to accommodate the widening alternative. The following discusses the analysis with regard to each aspect of historic integrity.

Location – As a result of the widening alternative, there would be no change in location for the Pensacola Dam Historic District as a whole or for any of the contributing resources within the district. As such, integrity of location would not be diminished.

Design – The proposed widening alternative would not adversely affect the Pensacola Dam Historic District's integrity of design. The proposed widening would have no impact on the functions and technologies of the historic property, and would not change the form, space, structure, and style of it. However, there would be a minor change in the plan of the bridges that carry SH-28 across the top of the dam and spillways. The proposed widening would increase the width of the three bridges by four feet to the upstream side. The widened sections would be cantilevered off the side of the dam and spillways and would be supported by bracing at the buttresses. A new railing would be installed on the upstream side of each structure that would be compatible in design to the existing railing but would be obviously new. The overlook would be removed and would not be

reintroduced with this widening alternative. While the widening alternative would be a minor impact to the overall design of the dam and spillways, the widening would not directly affect the historic property's character-defining features and would not affect spatial relationships that characterize the historic property. The new work would be differentiated from the old and would be compatible with the historic materials, features, size, scale and proportion, and massing. Therefore, integrity of design would not be diminished to such a degree that the Pensacola Dam Historic District could no longer convey its significance.

Setting – The proposed widening alternative would minimally impact the historic property's integrity of setting. The sidewalk overlook would be removed from the dam bridge in Widening Alternative 2, thereby changing the relationship of how pedestrians experience the surrounding features and open space. While a variation to raise the sidewalk over the gantry crane platform was considered, the analysis indicated the variation would introduce a substantial visual element to the setting that would constitute an adverse effect to the setting. Therefore, the variation was dismissed from further consideration.

Materials – The proposed widening alternative would have an indirect adverse effect on the Pensacola Dam Historic District's integrity of materials due to the extent of the historic fabric that would be removed with this widening alternative. To minimize the effects, the widened sections would be constructed of concrete, and strategies to blend the new concrete with the old concrete in color would be employed to avoid having bright white new concrete. The widened sections would be differentiated from the old but would be compatible with the historic materials. Although integrity of materials would not be diminished to such a degree the historic property could no longer convey its significance, the indirect effects would be adverse.

Workmanship –The proposed widening alternative would have no adverse effect on the historic property's integrity of workmanship. As discussed above, the widened sections would be compatible with the historic materials, features, size, scale and proportion, and massing of the existing bridges. While some of the historic features on the buttresses and spandrel columns may be obscured by the new, cantilevered section, and the historic railing would be replaced on the downstream side, these elements are not considered character-defining features of the historic property. Therefore, the proposed widening alternative does not rise to such a degree the historic property could no longer convey its significance.

Feeling – There would be no effect to the character-defining features of the historic property. Therefore, integrity of feeling would not be diminished.

Association – The proposed widening alternative would not sever the direct link between the historic district and its contributing resources with the engineering significance they convey. Furthermore, the proposed widening would not change the length of the dam,

directly impact any of the arches, or impact the system's ability to produce hydroelectricity. Thus, integrity of association would not be diminished.

As discussed above, Widening Alternative 2 would not diminish any aspects of the Pensacola Dam Historic District's integrity to such a degree that it could no longer convey its engineering significance. However, the cumulative extent of the loss of historic fabric, particularly resulting from the changes to the sidewalk, overlook, and gantry platform area, would result in an adverse indirect effect to integrity of materials and setting. The relatively minor changes to the design and workmanship would not constitute direct effects on the historic property's character-defining features. There would be no direct effect on the arches of the dam; there would be no change in the length of the structure; and there would be no impact on the system's ability to produce hydroelectricity. The proposed widening would pose no adverse direct effect, but would pose adverse indirect effects, to the historic property.

- **Widening Alternative 3, Downstream and Upstream Sides**

Widening Alternative 3 is a combination of Alternative 1 and Alternative 2. Alternative 3 provides for additional width for construction and flexibility for traffic access during construction. The downstream side is widened by 4'-6" to obtain two 12' lanes and the upstream is widened by approximately 1'-0" to increase the sidewalk width from 4'-0" to 5'-0". The 1'-0" upstream widening is the minimum possible without interfering with the gate hoist structures. Both upstream and downstream rails are proposed to be replaced. The light standards would be relocated from the sidewalk to the outside edge of the upstream railing.

The same beam sizes and supports proposed for Alternative 1 would be used for Alternative 3. An additional beam line would not be added to the upstream side of the bridge.

Alternative 3 is essentially Alternative 1 with minimal widening gained on the upstream side and double the cost of the rail replacement. While more practical and achievable than Alternative 2, the cost increase over Alternative 1 does not provide sufficient benefit to continue the analysis.

<u>Application of Criteria of Adverse Effect</u>

The Criteria of Adverse Effect were applied to Widening Alternative 3 discussed above. It is recommended the proposed widening alternative would pose an adverse indirect effect to the character-defining features for which the Pensacola Dam Historic District is significant due to the substantial amount of historic fabric that would be removed. The following discusses the analysis with regard to each aspect of historic integrity.

Location – As a result of the widening alternative, there would be no change in location for the Pensacola Dam Historic District as a whole or for any of the contributing resources within the district. As such, integrity of location would not be diminished.

Design – The proposed widening alternative would not adversely affect the Pensacola Dam Historic District's integrity of design. The proposed widening would have no impact on the functions and technologies of the historic property, and would not change the form, space, structure, and style of it. However, there would be a minor change in the

plan of the bridges that carry SH-28 across the top of the dam and spillways. The proposed widening would increase the width of the three bridges by 4'-6" to the downstream side and 1'-0" to the upstream side to increase the sidewalk width by 1'-0". The widened sections would be cantilevered off the side of the dam and spillways and would be supported by bracing at the buttresses. A new railing would be installed on both sides of each structure. The overlook would be removed and would not be reintroduced with this widening alternative. The light standards would be moved from the sidewalk to the outside edge of the upstream railing. While the widening alternative would be a minor impact to the overall design of the dam and spillways, the widening would not directly affect the historic property's character-defining features and would not affect spatial relationships that characterize the historic property. The new work would be differentiated from the old and would be compatible with the historic materials, features, size, scale and proportion, and massing. Therefore, integrity of design would not be diminished to such a degree that the Pensacola Dam Historic District could no longer convey its significance.

Setting – The proposed widening alternative would minimally impact the historic property's integrity of setting. The sidewalk overlook would be removed from the dam bridge in Widening Alternative 3, thereby changing the relationship of how pedestrians experience the surrounding features and open space. Thus, integrity of setting would be minimally diminished.

Materials – The proposed widening alternative would have an indirect adverse effect on the Pensacola Dam Historic District's integrity of materials due to the extent of the historic fabric that would be removed with this widening alternative. To minimize the effects, the widened sections would be constructed of concrete and strategies to blend the new concrete with the old concrete in color would be employed to avoid having bright white new concrete. The widened sections would be differentiated from the old but would be compatible with the historic materials. Although integrity of materials would not be diminished to such a degree the historic property could no longer convey its significance, the indirect effects would be adverse.

Workmanship –The proposed widening alternative would have no adverse effect on the historic property's integrity of workmanship. As discussed above, the widened sections would be compatible with the historic materials, features, size, scale and proportion, and massing of the existing bridges. While some of the historic features on the buttresses and spandrel columns may be obscured by the new, cantilevered section, and the historic railing would be replaced on both the upstream and downstream sides, these elements are not considered character-defining features of the historic property. Therefore, effects of the proposed widening alternative do not rise to such a degree the historic property could no longer convey its significance.

Feeling – There would be no effect to the character-defining features of the historic property. Therefore, integrity of feeling would not be diminished.

Association – The proposed widening alternative would not sever the direct link between the historic district and its contributing resources with the engineering significance they convey. Furthermore, the proposed widening would not change the length of the dam, directly impact any of the arches, or impact the system's ability to produce hydroelectricity. Thus, integrity of association would not be diminished.

As discussed above, Widening Alternative 3 would not diminish any aspects of the Pensacola Dam Historic District's integrity to such a degree that it could no longer convey its engineering significance. However, the cumulative extent of the loss of historic fabric, particularly resulting from the changes to the sidewalk with the removal of the overlook and full replacement of the railing, would result in an adverse indirect effect to integrity of materials and setting. The relatively minor changes to the design and workmanship would not constitute direct effects on the historic property's character-defining features. There would be no direct effect on the arches of the dam; there would be no change in the length of the structure; and there would be no impact on the system's ability to produce hydroelectricity. The proposed widening would pose no adverse direct effect, but would pose adverse indirect effects, to the historic property.

CONCLUSION

The Rehabilitation and Widening Alternative 1 designs have been developed to minimize the impacts to the Pensacola Dam Historic District to the greatest extent possible while meeting the project needs to provide a safe and efficient transportation system that will continue to serve the traveling public for many years to come. The application of the Criteria of Adverse Effect set forth in 36 CFR 800.5 provided the framework to assess the potential effects the alternatives may have on the Pensacola Dam Historic District. The assessment resulted in a recommendation that the Rehabilitation and Widening Alternative 1 would not pose adverse direct effects and would pose no indirect effects to the Pensacola Dam Historic District.

This is a preliminary assessment; coordination between GRDA, ODOT, and FHWA is taking place in Summer 2019. Once the SHPO agrees to review the project documentation, the compliance documentation will be submitted for consideration. Upon a BUILD grant award, the formal Section 106 coordination period would be initiated. As informal discussions have been ongoing between agencies involved, any resultant coordination could begin immediately thereafter to help ensure the project advances according to the planned schedule. [Ultimate determination of the effect of the project on historic resources lies with the SHPO. Should SHPO review result in a determination of adverse effect, further work would be required, including resolution of adverse effects under Section 106 of the NHPA and compliance with Section 4(f) of the U.S. Department of Transportation Act. A *Programmatic Section 4(f) Evaluation and Approval for FHWA Projects that Necessitate the Use of Historic Bridges* would streamline the Section 4(f) process as the programmatic evaluation only requires consideration of a limited, pre-established set of alternatives, and does not require a draft, a 45-day comment period, or circulation of the document. Advanced research has been completed to help ensure that the clearance process for historic resources proceeds as efficiently and effectively as possible.]

APPENDIX G

Additional Meeting Minutes

COX | McLAIN
Environmental Consulting

8401 Shoal Creek Blvd. Suite 100
Austin, Texas 78757
(512) 338-2223
Fax (512) 338-2225

MEETING MINUTES

To:	GRDA ODOT SH 28 Pensacola Bridge - Project File	**Participants:**	Siv Sundaram, ODOT Dawn Sullivan, ODOT Jennifer Bullard, ODOT (phone) Rick Johnson, ODOT Scott Sundermeyer, ODOT Rhonda Fair, ODOT Amber McIntyre, ODOT Randle White, ODOT (phone) Betsy Abraham, ODOT Erin Faulkner, ODOT Sue Tryon, Benham Paul Green, Freese & Nichols Jennifer Wasinger, Freese & Nichols Ashley McLain, CMEC Ann Keen, CMEC Ryan Blankenship, CMEC (phone) Steven Gauthe, ODOT Charles Sims, ODOT *See Attached Sign-In Sheet*
From:	Ashley McLain		
Subject:	Scoping Meeting Agenda		
Meeting Date:	October 26, 2018		
Location:	ODOT Office		
Minutes Date:	November 7, 2018		

Item	Description
1.	**Proposed Project – Overview/Background**

- GRDA applied for FHWA BUILD Grant through ODOT's SAPM Division for widening and rehab costs (Decision due December 19).

Sue Tryon, Benham – project introduction of design and alternatives, grant application, original desired schedule.

One project (Option A) is bridge rehabilitation and hydro demo and overlay with non-federal funds; goal is July 2019 letting if no federal funds are awarded.

If federal funds are awarded, then the bridge would be widened from 20 to 24 feet of clear roadway (Option B), along with the same bridge rehabilitation and hydro demo and overlay.

Either way this would be a mandatory tied project with one contractor. Benham brought CMEC on board recognizing the aggressive schedule and the potential for historic regulatory issues around the NRHP-listed Pensacola Dam Historic District. Benham team includes Freese & Nichols as well for public involvement and grant writing.

After assessing widening on the upstream side (too many impacts on dam operations), widening on the upstream and downstream sides (very costly), the team determined that the least impactful option is widening on the downstream side only.

Sue discussed load post ratings and some ongoing analysis; there may be updates to reduce the level of rehabilitation and strengthening needed.

8401 Shoal Creek Blvd. Suite 100
Austin, Texas 78757
(512) 338-2223
Fax (512) 338-2225

Jennifer: reminded the team that if the federal funding is awarded, all funds have to be obligated by 2020 and spent by 2025.

Proposed NEPA study area – discuss map

AM shared maps of the NEPA study area and explained temporary emergency routes, main dam versus spillways. Discussion of gap between bridges, whether to create a connected NEPA study area; footprint of disturbance would be very limited, wish to have manageable geographic area from a specialist study perspective. Amber and Liz Nichols to discuss with Ryan.

2. **Specialist Studies – Project Information; ODOT requests and needs**

- General: CMEC Environmental Scope of Work with Benham

AM briefly described CMEC's scope – cover all major environmental constraints areas with specialist study equivalents that could be adapted for a NEPA document depending on lead federal agency.

Waters/Wetlands Assessments

Benham team to address:

- GRDA owns the land and the dam, operates flood control in conjunction with the USACE;
- Temporary and permanent impacts;
- Agency coordination.

WOTUS and wetlands: Ryan provided summary of discussions between Steve Jacoby at GRDA and his good relationship with USACE – they work in tandem for flood elevations and management; seems to be mutually agreed upon documentation that there are no Section 408 issues. Section 404 needs additional follow up discussion for downstream areas that would potentially be temporarily affected during construction phase and returned to preconstruction contours. Team needs to "show our work" and confirm that this project is not a federal action or federal permit that could trigger Section 106 in a different way than funding nexus.

Ryan said we need to assess any temporary and permanent fill. Sue reiterated that Steve Jacoby feels his good relationship with USACE will help move any CWA permitting through quickly.

Siv stated that if there is any compensatory mitigation needed for impacts to WOTUS wetlands that GRDA would handle it.

Sue indicated that permanent impacts to WOTUS, as a result of the road widening, are not anticipated. Also, no placement of fill is anticipated as part of the 'southern' temporary access route option. Minor placement of temporary fill is anticipated as part of the 'northern' temporary access route option.

Biological Resources

- ODOT documentation standards

Biological Resources: Amber said she has no comments on the water approach. She said there is no critical habitat. Ryan reviewed the listed species that would be investigated and documented, reviewed information from the IPaC form we had obtained. He said the timing is good for deploying for winter field work during leaf off season. Amber requested clarification of study limit, whether or not the detour road would be included.

8401 Shoal Creek Blvd. Suite 100
Austin, Texas 78757
(512) 338-2223
Fax (512) 338-2225

Amber asked that Ryan coordinate with her and Liz Nichols to define the scope and the appropriate study area for Biological Resources studies.

Cultural Resources (Archeology, Historic Resources)

- Status of investigations;
- Section 106 of the National Historic Preservation Act;
- Section 4(f) of the Department of Transportation Act;
- Various possible scenarios with regard to 106 and 4(f) applicability and compliance.

Ann Keen reviewed what had been done to date; description in original NRHP nomination; contributing elements but silence on the bridge itself; some preliminary coordination has occurred with OK SHPO, two discussions, incorporating concerns of SHPO in design, historic presentation using power point, detailed discussion in anticipation of Section 106 and Section 4(f) analysis requirements. Next step if federal funding is received is to present the case to ODOT then present to SHPO for their effects determination.

If adverse effects, Section 4(f) is triggered and we propose a Programmatic Bridge 4(f). This process requires agreement by all agencies and parties involved (meets need and purpose with least harm to the resource) but does not have to be a circulated document with a 45 day review period.

Scott S. said we need to add a parallel alignment analysis. He appreciated that designers recognized the significance of the bridge and worked closely with qualified historians to identify alternatives that would typically eliminate or minimize the adverse effect. Early coordination with SHPO is also positive. The contributing elements have been identified. Be aware of avoiding impacts to any contributing elements. The NR nomination includes the dam, two spillways, the pumping/intake structure, the powerhouse, substation, and observation building in the district.

AM said the assessment was in anticipation of federal funding but was not the formal 106 or 4(f) evaluation; will be reviewed, coordinated with ODOT, formally submitted to SHPO very soon after federal funding determination if applicable.

In his experience with SHPO, Scott S. said any widening will be deemed an adverse effect. Be aware that if there are two 4(f) resources impacts that could trigger an Individual 4(f). If SHPO makes a determination of adverse effect to the District, FHWA-OK will need to evaluate the 4(f) as a constructive use, which could lead to an Individual 4(f).

Scott: In the historic bridge training, led by MnDOT and historic bridge experts, several examples of historic bridge rehabilitations were presented from around the country where impacts to historic bridges led to no adverse effect determination. OK-SHPO takes a conservative/resource protective approach, and did not agree with the examples presented.

General discussion; if FHWA approves the grant, that would imply interest in the project and its importance despite potential 'adverse impacts' to the historic district. Discussion of state role versus Advisory Council on Historic Preservation.

If this becomes an individual 4(f), the timetable is not predictable.

Park Resources

- Location of the park(s); can GRDA alter roads?
- Possible permitting implications;
- Section 4(f) applicability.

Discussion of the deed between GRDA and State of Oklahoma and parks

8401 Shoal Creek Blvd. Suite 100
Austin, Texas 78757
(512) 338-2223
Fax (512) 338-2225

department. Siv asked that CMEC do an analysis of Section 4(f) with regard to parks and also investigate for whether or not any federal funds were used in park improvements under Section 6(f) Land and Water Conservation Act funding. If LWCA funding was used, then replacement in kind and coordination with Department of Tourism and Department of Interior would be required.

Environmental Justice

- Basic socioec/baseline information to be collected

Environmental Justice: AM said CMEC is preparing a socioeconomic analysis to document the importance of the bridges to the surrounding communities and the tourism industry's importance to the local economy. Considerations will include a discussion of potential temporary (during road closures) and permanent impacts. Census data will be collected/updated for race, income, and limited English proficiency. That information will be folded in to the public involvement plan; ODOT to provide updated information on their guidance for EJ compliance and PI outreach.

Hazardous Materials

- ODOT documentation standards

3. **Public Involvement Activities/Public Concerns**

- Planned activities;
- Construction phasing and possible detours.

Paul provided a summary of public involvement activities, participants, comments. Future public involvement is planned. The county expressed concern about the roadway condition if a detour occurs. General discussion of length of detour (26 miles); if it becomes an official detour, study area may be expanded. If not an official detour, outreach would be focused on notification of roadway detour. Neither ODOT nor GRDA intends to designate county roads as an official detour route.

Notification of road closures would need to be sent to affected property owners.

Dawn pointed out that roadway detour notification letters could be provided along with public meeting notification/information provided at the meeting.

Rhonda indicated that there is one known tribal resource – a cemetery south of the main dam.

4. **Miscellaneous matters**

- Property owner notification, right-of-entry.
- ROE - provide at least a 10-day notification to property owners.
- Any access to tribal property requires written response.
- Tribal coordination letters by Rhonda Fair (after 30-day notification time period has elapsed, then field work can occur).
- ODOT will share correspondence with GRDA team.

5. **Action Items**

Send NEPA study area (county map base) to Rhonda who can draft letters to go out between now and 11/19 – can state that we will find out about federal funding. If letters go out 11/19, then field studies could start once the grant award is announced.

COX | McLAIN
Environmental Consulting

8401 Shoal Creek Blvd. Suite 100
Austin, Texas 78757
(512) 338-2223
Fax (512) 338-2225

CMEC to coordinate written scopes of work with Specialists in advance of 12/19 decision. Use latest task order scope language. Question: communication protocol? Who do we send requests to and who do we cc? Siv: ODOT will provide current scope of work but that needs to be coordinated with each of the specialists – CR, HW, Bio.

6. **Schedule**

Siv provided a draft schedule of deliverables that would need to be adjusted for learning about the grant award on 12/19/18 rather than a start date of 10/26/18 for most items.

If the grant is not awarded, can stick to July 2019 letting for construction start after Labor Day. If federal award, letting is not likely until 2020. Ideally, construction would start a few months prior to Labor Day with the bridges fully open. This allows the contractor to prepare for the widening underneath the bridge, followed by bridge closure after Labor Day. Project would be "mandatory tie" with one contractor.

---

*If you feel that any of the items listed above are not correct, or that any information is missing or incomplete, please contact Cox|McLain Environmental Consulting so that the matter can be resolved, and a corrected version issued if necessary.

MEETING SIGN-IN SHEET

GRDA ODOT SH 28 Pensacola Bridge

October 26, 2018 1:30 – 3:30, ODOT Offices

Name, Company/Organization	Email address	Initials
Siv Sundaram, ODOT	ssundaram@odot.org	
Dawn Sullivan, ODOT	dsullivan@odot	
Jennifer Bullard, ODOT	Phone in	
Rick Johnson, ODOT	Rjohnson@odot.org	
Scott Sundermeyer, ODOT	~~Scott Su~~ ssundermeyer@odot.org	
Rhonda Fair, ODOT		
Amber McIntyre, ODOT		amcintyre@ODOT.ORG
Steve Jacobi, ODOT		
Randle White, ODOT	Phone in	
Betsy Abraham, ODOT	babraham@odot.org	
Erin Faulkner, ODOT	efaulkner@odot.org	
Steve Jacoby, GRDA		
Sue Tryon, Benham	SUE.TRYON@BENHAM.com	
Paul Green, Freese & Nichols	Paul.green@freese.com	
Jennifer Wasinger, Freese & Nichols	jennifer.wasinger@freese.com	
Ashley McLain, CMEC	ashley@coxmclain.com	
Ann Keen, CMEC	annk@coxmclain.com	
Ryan Blankenship, CMEC (phone)	Phone	
Steven Gauthe	sgauthe@odot.org	
Charles Sims	CSims@ODOT.org	

SH-28 Pensacola Dam – Coordination Meeting – Rehabilitation Plans

Project Name | GRDA SH-28 Rehabilitation over Pensacola Dam
GRDA Project Number | 41806
ODOT Project Number | 31884(04)
Benham Number | 1400204
Location | Division 8 Conference Room
Date | January 8, 2019 | 1:30 PM
Attendees:

Steve Jacoby | GRDA | VP Hydro Operations
Craig Landrum | GRDA | Assistant Superintendent Hydro Operations
Randle White | ODOT Division 8 | Division Engineer
Jennifer Bullard | ODOT Division 8 | Construction Engineer
Aaron Beats | ODOT Division 8 | Claremore Resident Engineer
Siv Sundaram | ODOT Environmental Division | Division Engineer (Phone in)
Erin Faulkner | ODOT Environmental Division | NEPA Project Manager (Phone in)
Katie Brown | ODOT Bridge Division | Engineer
Keven Mayfield | ODOT Bridge Division | Squad Boss
Rick Johnson | ODOT Project Management Division | Division Manager
Charles Sims | ODOT Project Management Division | Project Manager
Ralph Nguyen | Aguirre & Fields | Bridge Engineer
Robert Rose | Aguirre & Fields | Roadway/Traffic Engineer
Sue Tryon | Benham Design | Project Manager
Karen Jones | Benham Design |Structural Engineer
Larry Wicks | Benham Design |Roadway/Traffic Engineer
Paul Green | Freese & Nichols | Constructability/Public Involvement
Ashley McLain | Cox McLain | Principal / NEPA Documentation (Phone in)
Ann Keen | Cox McLain | Historic Preservation (Phone in)
Will Dillsaver | Cox McLain | Biologist (Phone in)

We believe the following record to be an accurate summary of decisions and related discussions. We will appreciate notification of exceptions to this record within 10 (ten) days of its receipt. Failing such notification, we will consider this a statement of fact in which you concur.

Discussion

- The BUILD Grant Application was not approved. GRDA is continuing to research if there are any other ways that the widening might be funded, including whether the grant application if submitted next year might be possible. Questions include why not selected, and likelihood of selection next year if re-submitted. GRDA will have an internal meeting on January 16, 2019 to decide whether to reapply for widening funds.

- Mandatory Tie Two Projects:
  - ODOT Letting: July Letting Hydrodemolition and Overlay. PS&E Submittal no later than April. Limit Road Closure Time based on anticipated duration.
  - Agreement ODOT & GRDA: Rick Johnson and Charles Sims will work out the agreement with ODOT and GRDA.

- Project Number: SSP-249-C(052)SS
- Job Piece Number: 31884(05)
- Project Traffic Control & Sequencing: Larger project will carry the pay items. The ODOT project is under $3.5 Million. The GRDA project is awaiting results of load testing program to determine the updated costs.
- Robert Rose will provide traffic pay items and notes in DGN format, on the assumption that the GRDA project will have the larger cost.

- Load Testing Program
  - Preliminary results indicate greatly reduced strengthening required.
  - No specifics available yet.
  - Duration and cost depend upon the specifics of the load testing report.

- Construction Items:
  - Items of Work Deck Rehabilitation
  - Items of Work Bridge Rehabilitation
  - Intermingled Items:
    - Curb repair or parapet repair during the road closure
    - Floor beams at joints may require more extensive repairs, i.e. removal and replacement instead of patching during the hydrodemolition. Likely 60 days hydrodemolition and 120 days overlay.
    - Some hinge repairs will require a bridging structure to support during replacement, holes through the deck. Ideally performed prior to hydrodemolition & overlay. Likely 3 months duration, and can be concurrent with the hydrodemolition and overlay.
  - Construction Duration: Ralph Nguyen will identify duration for Hydrodemolition & Overlay with Traffic Closed. ODOT will check with Phil Loafman.
  - Construction Duration: Sue Tryon will identify duration of rehabilitation work with Traffic Closed after receipt of the Load Rating Report. Other work can proceed with traffic on the bridge.
  - Bridge End Treatments | Guardrail with Standard 5' widening & fill
  - Kevan Mayfield will provide a current example of combining bridge pay items for the two projects per JP and with a total in the Summary of Pay Items.

- Environmental
  - There is no federal nexus, so nothing further is required for NEPA.
  - No further need for cultural resources & historic preservation.
  - SocioEconomic Justice data is not required.
  - 404 Permit: The only potential impact is fill in the channel for the Emergency Detour Route. Steve Jacoby will coordinate with the Corps of Engineers re: 404 permit requirements. Benham will assist if a permit is required.
  - Park Drives: Continue as is for now.
    - Ashly McLain will identify whether federal funds were used to improve the state parks. ODOT indicated there is not a state parallel to the 4f regulations.
    - The guardrails would be on state property. If necessary, the guardrails can be stopped short of the desired length to avoid impacting the park drives.
    - Ashley will prepare a white paper regarding the findings for the park drives.
  - Public Involvement
    - A Public Meeting will be held, per the Roundrobin Document. It will be more informational than traditional public meetings. The 90% Plans are typically desired prior to the meeting, however in this case, the main items will be the detour routes and the time & duration of road closure.
    - A Pre-Public Meeting will be held beforehand.
    - Siv Sundaram will provide a list of stakeholders and go-by letter.
    - Paul Green will provide a list of exhibits, minimal exhibits are anticipated.

- Proposed Schedule
  - Pre-Public Meeting | Mid-January
  - Stakeholders Meeting (Cities, 1st Responders, Sheriff) | February 21
  - Public Meeting | Mid-February
  - FPFR Plan Submittal | Late February
  - FPFR Meeting | First week of March
  - PS&E Submittal | April 7
  - Letting Date | July (90-day submittal)

P:\FDB\1650-TUL\CIV\1400204-GRDA-PensDam\00_GNRL\20_MM\10_Clnt\20190108_CoordinationMtg

List of Attendees

Date 1/8/2019 Location DIV 8 HQ

Project Number: NA
Job Piece Number: 31884(04)
Highway Number: SH-28
Description: SH-28 Over Pensacola Dam

Name	Representing	Phone	Email Address
Randle White	ODOT Div. 8	918-838-9933	Rwhite@odot.org
Charles Sims	ODOT-PMD	(405)522-7608	Csims@odot.org
Rick Johnson	ODOT-PMD	405-522-3816	RJohnson@odot.org
JENNIFER BULLARD	ODOT-DIV8	918.857.5020	jbullard@odot.org
Aaron Beals	ODOT-Chremore	918-271-8330	abeals@odot.org
Katie Brown	ODOT-Bridge	405 522 2655	kabrown@odot.org
Kreven Mayfield	ODOT-Bridge	405 521 4234	kmayfield@odot.org
Ralph Nguyen	Aguirre & Fields	405-759-6200	ralph.nguyen@aguirre-fields.com
Robert Rose	Aguirre & Fields	405 759 6200	robert.rose@aguirre-fields.com
PAUL GREEN	FREESE & Nichols	405-974-0743	paul.green@freese.com
Craig Landrum	GRDA	918-256-0875	clandrum@grda.com
SUE TRYON	BENHAM	918-599-4242	SUE.TRYON@BENHAM.COM
Karen Jones	Benham	9185994385	karen.jones@benham.com
Larry Wicks	Benham	918-492-1600	larry.wicks@benham.com
Steve Jacoby	GRDA	918.610.9727	sjacoby@grda.com

MEMORANDUM

FREESE AND NICHOLS

Innovative approaches
Practical results
Outstanding service

6303 N Portland Ave, Suite 100 • Oklahoma City, Oklahoma 73112 • 405-607-7060 • FAX 817-735-7491 www.freese.com

TO: Sue Tryon, P.E. Benham

CC: Paul Green, P.E. Freese and Nichols

FROM: Tim Vermillion, Freese and Nichols

SUBJECT: Stakeholder Meeting Minutes for Bridge Rehabilitation of the Pensacola Dam Bridge and the east & west Spillway Bridges on SH 28 over the Grand Lake O' the Cherokees.

DATE: 3/26/2019

PROJECT: BND17496

A stakeholder meeting was held at the GRDA Education Center in Langley, OK on 3/14/2019 at 2:00 P.M.

The following is a summary of items discussed.

Paul Green from Freese and Nichols and Sue Tryon from Benham welcomed the attendees and had everyone introduce themselves and indicate where they lived and what stake they had in the project.

Paul Green went over the purpose of the project and the history of the BUILD grant process for this project.

Paul answered questions regarding why the road has to be closed, duration of closure and described the project timeline and the BUILD grant timeline. He went on to discuss how the project plan was to make every effort to accommodate the Big Meat Run and the St. Patrick's Day Run.

Paul Green discussed the emergency detour route and the need for a communication plan for first responders to utilize when using the detour route. Stakeholders asked how to keep locals from using the emergency detour route. The response was that it will be signed "Emergency Responders only" or something to that effect. The GRDA police said it will be enforced by them via citations.

A stakeholder asked about using alternative routes other than the signed state detour route. The Mayes County Commissioner stated he has no issue with the use of the county road but doesn't want big trucks on it. Paul added that due to state statute, state dollars cannot be used to improve county roads unless they are used as the designated detour and without first entering into a memorandum of agreement. The County Road (Topsy Road) cannot be designated as a detour as it does not have adequate roadway geometry to accommodate highway traffic.

Several Stakeholders want a traffic signal placed at the intersection of Topsey Road and SH 28 due to several accidents. The Commissioner said he will look at adding signage at the intersection. Other stakeholders mentioned the history of danger at that intersection. The team will evaluate putting a temporary signal at the intersection, with an awareness that traffic will be greatly reduced at the

intersection during construction, due to the detour route.

A stakeholder mentioned the bad condition of “Disney Highway”. ODOT’s Div. 8 representative, Jennifer Bullard said she will look into it and will contact the maintenance engineer to ask about it.

Another stakeholder mentioned wanting another patch job done to the dam as some temporary relief. The stakeholder said he will call the ODOT maintenance yard himself. The stakeholder mentioned it was very important that the drainage grates be flush with the roadway.

A stakeholder asked if closure time will be reduced if only a resurface was completed. Sue Tryon, Senior Project Manager of Benham answered no. The 9-month timeframe is for the resurfacing project. A longer timeframe is required for widening but will work around the summer months.

A stakeholder asked what happens if the emergency road gets washed away. Paul explained that there will be provisions to rebuild it should that happen.

A stakeholder asked if the pedestrian walkway will be retained in the project. Paul Green said it will be. The Stakeholder went on to say it is very important and many people use it. The pedestrian sidewalk will not be available during construction, but will be retained as-is once the project is complete.

A question was asked concerning warranty on the proposed construction work to be performed. Jennifer Bullard from ODOT stated there is usually a 1- year maintenance bond.

A question was asked when the start date of an overlay would occur if the grant wasn’t chosen this time. Spring 2020 was given as the start date. The bridge won’t be closed to traffic until after the Labor Day weekend.

A stakeholder asked if there was any merit to the rumor that the grant wasn’t chosen due to the fact the bridge was on the National Register of Historic Places list. Paul explained that the rumor wasn’t true.

A stakeholder asked why the BUILD grant application wasn’t chosen. Paul Green explained that there was a debrief held for the applicants and that only so much money was allotted for the program. The application was very well liked but didn’t make the final cut. Out of 900 applicants this project was in the top 125. Only 91 were funded. The debrief indicated that the project sponsor should apply again.

After closing remarks and a request for any additional questions, the meeting ended. Stakeholders were encouraged to contact Paul Green with any questions or concerns.

MEETING
SIGN IN SHEET

FREESE AND NICHOLS

Innovative approaches
Practical results
Outstanding service

PROJECT NAME: SH-28 Pensacola Dam
PROJECT NUMBER:
MEETING PURPOSE: Stakeholder Meeting
DATE: 3/14/2019
FACILITATOR: Paul Green

	NAME	REPRESENTING	PHONE	EMAIL
1	[illegible]	[illegible]		
2	Randy Grammer	Hwy 82 Design	(918) 788-0843	
3	Amanda Silvers	Sq. Grand Lake Area Chamber	918-782-3214	
4	Sheriff Mike Reed	MCSO	825-3535	
5	Duane Chezem	Wave On Flage	782-3330	
6	Joe & Stacy Landon	American Bank of Okla	cell 918 633 5344	
7	Paula Harbuck	Harbuck	918-230-8449	pharbuck@gmail.co
8				
9				
10				
11				
12				
13				
14				
15				
16				
17				
18				
19				
20				
21				
22				
23				
24				

MEETING
SIGN IN SHEET

FREESE AND NICHOLS

Innovative approaches
Practical results
Outstanding service

PROJECT NAME: SH-28 Pensacola Dam
PROJECT NUMBER:
MEETING PURPOSE: Stakeholder Meeting
DATE: 3/14/2019
FACILITATOR: Paul Green

	NAME	REPRESENTING	PHONE	EMAIL
1	JENNIFER BULLARD	ODOT	918 838 9933	jbullard@odot.org
2	Sue Watkins	M&E	918-937-3372	smwatkinsrn@yahoo.com
3	Tracy Shaw	Del. Co. Sheriff	918-253-4531	Shaw@Delcosheriff.org
4	Tim THOMPSON	MAYES CO SHERIFF	918-373-6248	UNDERSHERIFF@MAYESSHERIFF.ORG
5	Ed Ferguson	GRDA Police	918 2560890	ed.ferguson@grda.com
6				
7				
8				
9				
10				
11				
12				
13				
14				
15				
16				
17				
18				
19				
20				
21				
22				
23				
24				

MEETING
SIGN IN SHEET

FREESE AND NICHOLS

Innovative approaches
Practical results
Outstanding service

PROJECT NAME: SH-28 Pensacola Dam
PROJECT NUMBER:
MEETING PURPOSE: Stakeholder Meeting
DATE: 3/14/2019
FACILITATOR: Paul Green

	NAME	REPRESENTING	PHONE	EMAIL
1	SUE TRYON	BENHAM	918-599-4242	SUE.TRYON@BENHAM.COM
2	PAUL GREEN	Freese and Nichols	405-252-5936	
3	Karen Jones	Benham	918 599 4385	karen.jones@benham.com
4	LARRY WICKS	BENHAM	918-492-1600	larry.wicks@benham.com
5	Rusty FLEMING	GRAND TIMES	782-7710	
6	Ryan Ball	Mayes County	918-638-9519	rball@mayes.okcounties.org
7	Chris Tuter	MAYOR / DISNEY	918-640-7914	Mayor of Disney@gmail
8	Jim LaRue	Deacon - Disney Assembly of God	918-782-8913	
9	MOVA MOORMAN	SELF	918-261-4957	MOVAMOORMAN@yahoo.com
10	[illegible]	"	918-261-5120	DHICKS@TulsaCounty.org
11	Dusty Wood	Copperhead Lodge All American WRCM	580-231-4357	dusty1wood@yahoo.com
12	Roy Hegenbarth	Self	405 637 8006	
13	John & Rosemary Matney	Self	918-435-5208	rmmatney@yahoo.com
14	MARY CLAIBORNE	GRAND LAKE		maryec0501@gmail.com
15	Raymon Jones	Disney BOG	918-637-0103	raymon.l.jones@gmail.com
16	AnnaMarie Davidson	Town of Disney	918-637-4709	Townofdisney@outlook.com
17	Bill & Diane Castles	SELF	918 697-2214	wcastles@grandnet
18	Paula Silzer	SELF	918 782 2176	
19	Ross Hogan		Disney	918-520-4504
20	Laura Holden	Langley City	918-782-2776	
21	BRANDON ALEXANDER	JAY EMS	918-801-2597	jayems721@gmail.com
22	Russell Martin	Delaware Co. District 2	918-915-0890	delbard2@yahoo.com
23	William Long	Langley City/FD	918-260-8375	
24				

MEETING
SIGN IN SHEET

FREESE AND NICHOLS

Innovative approaches
Practical results
Outstanding service

PROJECT NAME: SH-28 Pensacola Dam
PROJECT NUMBER:
MEETING PURPOSE: Stakeholder Meeting
DATE: 3/14/2019
FACILITATOR: Paul Green

	NAME	REPRESENTING	PHONE	EMAIL
1	Robert Jenks	Mooneys	918-530-0006	robertjenks77@gmail.com
2	DOUG ANDRUS	DISNEY	918 314 8366	
3	BRANDON HUSTON	DELAWARE CO. SHERIFF	918-255-2700	
4	Tim Vermillion	FNI	405 252 5939	
5	Charles Scott	Reasor's	918 787-3227	CSCOTT@reasors.com
6	RICHARD WRIGHT	LAKEMONT FIRE DEPT	918 520 0385	FIRE19ER@GMAIL.COM
7	ROB RUDER	" " "	918 314 3749	RRAZOR1009@GMAIL.COM
8	TIM WILLIAMS	AMERICAN BANK OF OK	918-323-1266	twilliams@americanbankok.com
9	Mick Bingham	Disney Assembly/Grd	918-253-7252	
10	Dick Bedrek	Bedrek Farms	918 640 3561	
11	Johnny Janzen	Mayes Co Em	918-530-6114	mayescountyem@yahoo.com
12	Dianna McIntyre	Grand Lake RV Resort	918-782-2920	dianna@grandlakervresort.com
13	Amy Flanagan	Cedar Port	918-435-8250	amy.fla
14	David Crouse	Decks + Docks	918 519 4948	DavidCrouse60@gmail.com
15				
16				
17				
18				
19				
20				
21				
22				
23				
24				

SH-28 Pensacola Dam Coordination Meeting

Project Name GRDA SH-28 Widening over Pensacola Dam
Project Number JP 31884(05) | GRDA: 41806 | Benham # 1400204
Location Design Conference Room
Date April 29, 2019 | 1:00 pm
Attendees:

Steve Jacoby
Randle White, by phone
Jennifer Bullard, by phone
Rick Johnson
Sara Downard
Paul Green
Jennifer Wasinger
Sue Tryon

Discussion

- BUILD Grant Application Roles confirmed
  - GRDA/Benham Team to update the following to reflect Load Testing Program (LTP)
    - Grant Narrative
    - 60% Widening Plans
    - Cost Estimates
    - Preliminary Design Report
    - Historic Preservation documentation
  - GRDA to proceed with NEPA Studies to be ready for review if granted funds
  - ODOT to host the grant application website – Rick Johnson will coordinate with SAPM: Matthew Swift & Shelby Templin
  - ODOT to update the BCA. Benham to supply updated cost estimates
  - Jennifer Wasinger and Shelby Templin will review letters of support to see if we need to add any. GRDA will coordinate the same letters of support as last time. Jennifer has the new addresses & representatives.
  - Jennifer Wasinger is reviewing grant applications from last year, to see what was successful and what was not.
  - Shelby Templin will review the cost sharing of other grants, to see what makes sense here. The LTP appears to save approximately $2M in not needing to strengthen the deck (confirming with Walt Peters and TranSystems). What makes the most sense: put that money into other rehabilitation work, put it towards the widening, or back into capital funds, or a mixture? GRDA to decide, with input from Shelby regarding the successful grants from the previous round of BUILD Grants.

- Schedule/Plan for either scenario:
  - BUILD Grant Schedule – Application due July 15, 2019. Notice of Award November 12, 2019.
  - NEPA Review – will be ready in Mid-December.

- 404 Permit – Steve Jacoby will coordinate as a Nationwide. The area near Beach Drive is not a blue-line stream, and we will use either a culvert or a bridge to cross the spillway's channel.
- Section 106 | Section 4(f) | SHPO Prepared to go to National Historic Council if needed. Sara Downard will reach out to Siv Sundaram re: Relationship with SHPO.
- Public Meeting for Road Closure
- FPFR & PS&E Submittal if we do not receive the grant:
    - PS&E Rehab Plans for July 2020 Letting.
- FPFR & PS&E Submittal if we *do* receive the grant:
    - Randle White to review Schedule and Sketches of Buttress & Pier Attachment work that can be performed prior to bridge closure.
        - Review Letting Schedule for July 2020 versus January 2021.
        - Draft Meeting Minutes for Public Information Meeting are attached.

P:\FDB\1650-TUL\CIV\1400204-GRDA-PensDam\00_GNRL\20_MM\10_Clnt\20190429_Coordination\Benham Agenda.docx-

SH-28 Pensacola Dam BUILD Grant Coordination Meeting

Project Name: GRDA SH-28 Widening over Pensacola Dam
Project Number: JP 31884(05) | GRDA: 41806 | Benham # 1400204
Location: Conference Call
Date: June 3, 2019 | 2:00 pm
Attendees:

Steve Jacoby, GRDA
Adam Gentis, ODOT
Randle White, ODOT
Jennifer Bullard, ODOT
Matthew Swift, ODOT
Shelby Templin, ODOT
Laura Chaney, ODOT
Siv Sundaram, ODOT
Scott Sundermeyer, ODOT
Steven Gauthe, ODOT
Erin Faulkner, ODOT
Jared Schwennesen, ODOT
Sara Downard, ODOT
Amber McIntyre, ODOT
Jeff Pearl, ODOT
Paul Green, FNI
Jennifer Wasinger, FNI
Ashley McLain, CMEC
Ann Keen, CMEC
Emily Reed, CMEC
Ryan Blankenship, CMEC
Brian Comer, HNTB
Eric Strack, HNTB
Sue Tryon, Benham
Karen Jones, Benham

Discussion

We believe the following record to be an accurate summary of decisions and related discussions. We will appreciate notification of exceptions to this record within 10 (ten) days of its receipt. Failing such notification, we will consider this a statement of fact in which you concur.

- The 2018 BUILD Grant Application is located on the following website: https://www.ok.gov/odot/Progress_and_Performance/Federal_Grant_Awards/BUILD_Grants/Mayes_County_SH-28_Pensacola_Dam_Bridges_Widening_and_Rehabilitation.html

- UPDATE from Last Year:

  The grant application was not successful last year, and in December 2018 we began preparing 90% plans for rehabilitation of the bridges without widening. The Rehabilitation Only project would consist of two sets of construction plans to be let in July 2020 with a mandatory tie. ODOT Project 31884(04) plans were prepared by Aguirre & Fields, and consists of Milling 0.5" of asphalt overlay, Hydrodemolition of the upper 1.5" of the concrete deck surface, followed by 2" of Latex Modified Concrete Overlay. This mill/hydro/overlay would be from curb to curb on the top-side of the bridge. These plans are approximately 90% complete.

  The GRDA Project 31884(05) would rehabilitate the underside of the bridge. As a result of a load testing program in November 2018, the structure has been found to be stronger than indicated by previous load rating calculations. After coordination with GRDA and ODOT Bridge Division, the rehabilitation work primarily consists of replacing the hinges on the arch section of the bridge and repairing floor beams at the joints where necessary. The savings from strengthening will primarily be re-directed to replacing all of the hinges, rather than the worst hinges.

- In January 2019, the FHWA debrief indicated we had come VERY close to being awarded funds, with the project being one of the final 125 on the Secretary of Transportation's desk. The program ran out of funds before getting to our project. ODOT and GRDA have agreed to pursue the BUILD Grant for the same project in 2019, with the Grant Applications due July 15, 2019, with a limit of 30 pages.

  Should the grant application be successful, the goal of the project is to continue towards a July 2020 Letting, with a mandatory tie between the ODOT 31884(04) and GRDA 31884(05) projects. The proposal is still to widen the bridges from 19'-8" to 24'-0". As before, the GRDA Project would build corbels and attachments to the buttresses and piers to accommodate a new "beam line" and add deck and new parapet to accomplish the widening on the downstream side of the bridge. The deck would be joined to the existing deck in such a way as to allow the hydrodemolition operation to properly prepare the surface of both the new and old deck to receive the concrete overlay without a joint in the wheelpath and to reduce maintenance problems. The ODOT plans would require updates to quantities and details to reflect the wider roadway surface.

- The primary change from plans and estimates last year is that the load testing program indicated that we do not need to strengthen the underside of the deck or the floor beams to carry the current loading, which will allow us to direct more funds towards rehabilitation. Our current estimates for rehabilitation use all of the funds GRDA allocated towards the project, with no remaining funds to put towards the widening.

- Construction Duration:
  For the Widening and Rehabilitation Project, we anticipate the following Construction Schedule:
  - Road Closure of the Main Dam Bridge September 4, 2020.
  - Open Main Dam Bridge for 1.5 weeks in March 2021, then reclose.
  - Open Main Dam Bridge for traffic May 26, 2021. Total 265 Calendar days, closure 250 days.
  - Road Closure of the Spillway Bridges September 8, 2021
  - Open Spillway Bridges December 7, 2021. Total Closure 90 Calendar days.

- Components of the 2018 BUILD Grant Application are good building blocks for the upcoming Grant Application. The components from the website are as follows, with yellow highlights indicating where updates are necessary:

Application Narrative

- Application Narrative

Certification and Assurances

- Certification and Assurances

Letters of Support

- Governor Mary Fallin
- Mayes County 911
- Mayes Emergency Services
- Oklahoma Department of Commerce
- Oklahoma State Representative Josh West
- Oklahoma State Senator Wayne Shaw
- South Grand Lake Chamber of Commerce
- Town of Disney
- U.S. Representative Markwayne Mulin
- U.S. Senator James Inhofe

Maps and Graphics

- GRDA Pensacola Dam Detour Route
- GRDA SH-28 60% Plans
- GRDA SH-28 Interactive 3D Arch Section Bridge Widening (Open with Internet Explorer)
- GRDA SH-28 Interactive 3D East Spillway Section Bridge Widening (Open with Internet Explorer)
- U.S. Megaregions Map
- GRDA SH-28 Interactive 3D Non-Overflow Section Bridge Widening (Open with Internet Explorer)
- GRDA SH-28 Interactive 3D Spillway Section Bridge Widening (Open with Internet Explorer)
- Traffic Analysis Map

Reports and Technical Information

- GRDA Grand Lake East Spillway Field Assessment Report
- GRDA Grand Lake West Spillway Field Assessment Report
- GRDA Pensacola Dam Field Assessment Report
- GRDA SH-28 Pensacola Dam Crash Data 2012-2017
- GRDA Benham Preliminary Design Report
- GRDA Benham SH 28 Preliminary Design Supplemental Report
- GRDA ODOT Stakeholder Meeting Minutes
- SH-28 Benham Traffic Study
- Mayes County SH-28 Bridge Widening BCA Narrative
- Mayes County SH-28 Bridge Widening BCA 20yr (Xcel)

ADD:
GRDA Benham SH 28 Preliminary Design Supplemental Report No. 2

- Direction for updating the BUILD Grant Application to enhance the win:
  - Provide more definition of safety benefits
  - More of the "story" with anecdotes and compelling stories: impacts if the bridge isn't widened, rural community cut off without bridge, emergency responder coordination; i.e. how will the project be transformative
  - Qualitative emphasis
  - More photos
  - More reliance on the hard copy document, less on the website. Some evaluators do not go to the website.
  - Emphasize effort to work in the off-season to benefit the communities, tied to another project to limit closure
  - This application can be 30 pages, maximize usage of the white-space

- Schedule:
  Critical timelines include the following:
  - NEPA Studies are underway. ODOT Environmental Division and CMEC/Benham will coordinate further on schedule in another forum. ODOT will act as the lead agency and will be responsible for all direct coordination/consultation with other agencies (SHPO, USFWS, USACE)

    - Cultural Resources & SHPO Section 4(f)
      - An initial meeting was held with SHPO October 2017, with renderings of the dam and photographs presented. At that time, SHPO did not have a nexus for official review, but granted an introductory meeting to discuss the project. Per their preferences, arches have been incorporated into the widening design.
      - A follow-up was made in September 2018, without renderings. SHPO appreciated that arches will be incorporated, but no official comment until there is a federal nexus.
      - CMEC provided ODOT with four case studies of similar projects in other states

- When water recedes from the spillways, will take photographs to correlate current conditions to conditions at time of Historic Register application. Current target June 17-18.
- The Section 106 process is ready to be advanced since property owner notification has occurred; field work can start once conditions are safe.
- ODOT is reaching out to SHPO to request at least informal review of the project prior to grant notification.
- Bi-monthly call established with cultural resources team.

▪ Biological Studies
  - Field work will proceed when water recedes. Current target June 17-18.
  - Additional Presence/Absence surveys will be needed for bats (visual and acoustic) and the American Burying Beetle. These are to occur at the same time as the bio/water field work.
  - Provide specialist study to ODOT
  - ODOT will review and initiate coordination/consultation with USFWS.

▪ Hazardous Waste Studies: CMEC has database search and field maps; target field work date is June 19-20.

▪ Park Roads Section 4(f): Limited publicly-owned parcels owned; AM will review ownership documents and proceed with white paper if coordination needs to occur with Official with Jurisdiction.

▪ Socioeconomics/EJ: CMEC will prepare appropriate Specialist Study; emphasis on demographics and economic impacts of construction phase; no displacements so analysis could be streamlined. Other CMEC team members will collect any outstanding field data during their field work.

o Final Plan Development and Schedule: *UPDATED TO REFLECT COMMENTS:*

▪ The 60% plans from last year will be updated to reflect the results of the load testing program.

▪ Currently developing final design plans for both scenarios: Rehabilitation Only and Rehabilitation and Widening

▪ **Grant Documents to ODOT for Uploading to Grant Application Site July 10, 2019**

▪ **Grant Application Due July 15, 2019**

▪ **November 12, 2019 Notice of Grant Award**

▪ **Public Involvement Pre—Meeting Tentatively November 14 or 21, 2019**

▪ **Public Involvement Meeting for Road Closure Tentatively December 19, 2019**

▪ **FPFR Submittal March 6, 2020**

▪ **FPFR Meeting Tentatively March 20, 2020**

▪ **PSE Submittal April 10, 2020**

▪ **July 2020 Letting**

❖ Assignments to update BUILD Grant Application Components:

o Benham:

▪ 60% Widening Plans to reflect Load Testing Program (LTP).

▪ Supplemental Design Report No. 2 to reflect LTP

▪ Cost Estimates for widening alternative to HNTB for the BCA, including capital costs by year of expenditure

o CMEC:

▪ Content will focus on Section 106 and Section 4(f); brief status updates to the following Specialist Studies will be included but not all studies may be fully complete prior to grant application.

        - Historic Preservation documentation to reflect LTP
        - Cultural Resources & Tribal Coordination
        - T&E & Wetland Studies
        - Haz Waste Studies
        - Socio-Economic Studies
        - USFWS
        - 4(f) Park Roads
    - FNI:
        - Grant Narrative
        - Update to Letter of Support Language
    - HNTB:
        - BCA Narrative
        - BCA Excel Spreadsheet
    - GRDA:
        - Letters of Support
        - 404 Permit
        - Anecdotes from local community
    - ODOT:
        - Host Website
        - Certification and Assurances
        - MegaRegions Map (revise project location)

P:\FDB\1650-TUL\CIV\1400204-GRDA-PensDam\00_GNRL\20_MM\10_Clnt\20190603_BUILD Grant Coordination\BUILD Minutes.docx-

BENHAM
a Haskell Company