FED. ROAD DIST. NO.	STATE	F. A. P. PROJ. NO.	FISCAL YEAR	SHEET NO.	TOTAL SHEETS
6	OKLA.				

STATE OF OKLAHOMA

DEPARTMENT OF TRANSPORTATION

PLAN OF PROPOSED

STATE HIGHWAY

FEDERAL AID PROJECT NO. NHPPI-0240-1(358)004SS

INTERSTATE HIGHWAY NOS. I-240 & I-35

OKLAHOMA COUNTY

CONTROL SECTION 35-55-15

STATE JOB NO. 09032(17)

PHASE 1A

INDEX OF SHEETS

SHEET NO.	DESCRIPTION
1	TITLE SHEET
2	INDEX OF SHEETS

DESIGN DATA

ADT-(2030)	= 152,000
DHV	= 9%
D	= 55%
T(%ADT)	= 10%
V	= 55 MPH
EXPRESSWAY	= 55 MPH
SERVICE ROADS	= 40 MPH
CROSS STREETS	= 40 MPH
RAMPS (DIRECT)	= 50 MPH
RAMPS (LOOPS)	= 25 MPH
RAMPS (SEMI-DIRECT)	= 45 MPH
20 YEAR FLEX ESALS	= 59.7 M

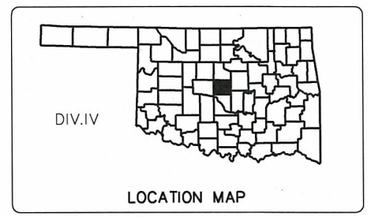

LOCATION MAP

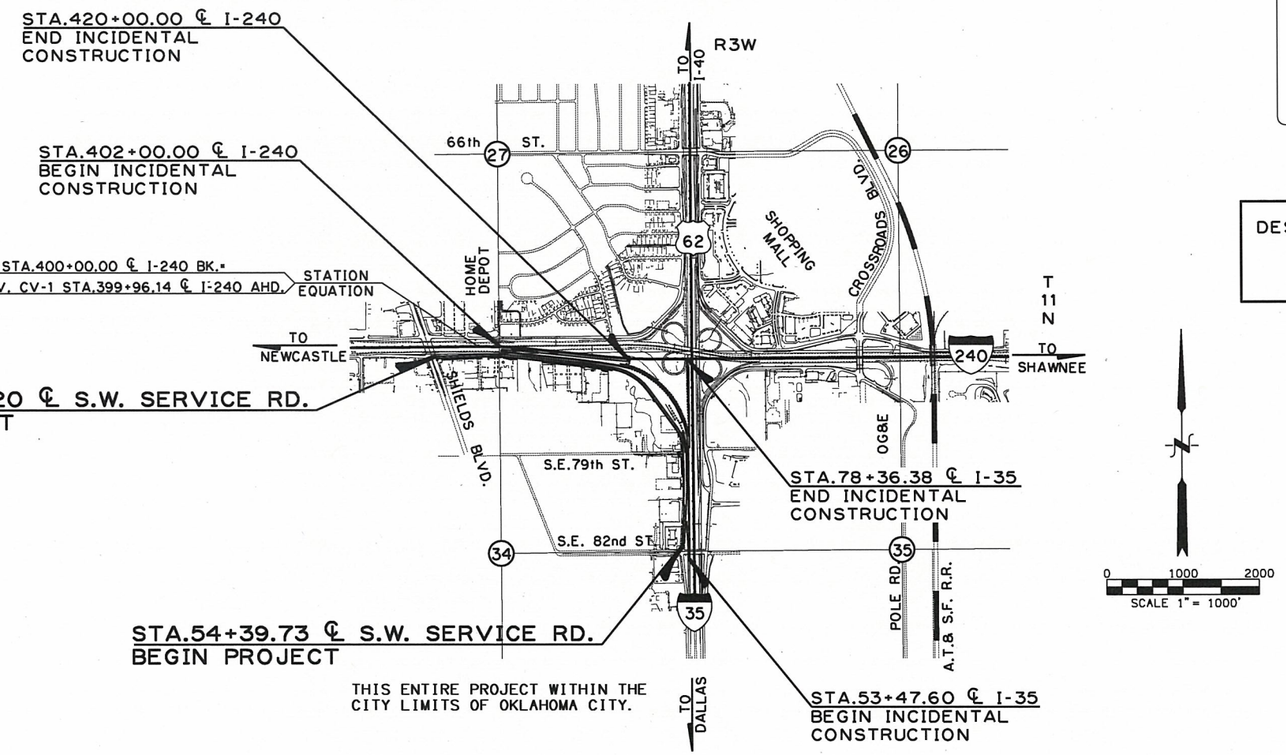

DESIGN EXCEPTIONS INCLUDE:
SHOULDER WIDTH
STOPPING SIGHT DISTANCE (HORIZ.)

SCALE 1"

PLAN 1" = 100'
PROFILE HOR. 1" = 100'
VER. 1" = 10'
LAYOUT MAP 1" = 1000'

LEVEL DATUM IS MEAN SEA LEVEL (U. S. C. & G. S.)
BEARINGS ARE GRID BEARINGS IN THE O. S. H. D. PLANE COORDINATE SYSTEM.

CONVENTIONAL SIGNS

- PROPOSED ROAD
- RAILROADS
- RANGE & TOWNSHIP LINES
- SECTION LINES
- QUARTER SECTION LINES
- FENCES
- GROUND LINE
- EXISTING ROADS
- BASE LINE
- GRADE LINES
- TELEPHONE & TELEGRAPH
- POWER LINES
- OIL WELLS
- BUILDINGS
- DRAINAGE STRUCTURES-IN-PLACE
- DRAINAGE STRUCTURES-NEW
- RIGHT-OF-WAY LINES-EXISTING
- RIGHT-OF-WAY LINES-NEW
- RIGHT-OF-WAY MARKERS-IN PLACE
- RIGHT-OF-WAY MARKERS-REMOVE & RESET
- RIGHT-OF-WAY MARKERS-NEW
- CONTROLLED ACCESS
- SS — EXISTING SANITARY SEWERS
- G — EXISTING GAS LINES
- W — EXISTING WATER LINES
- TUG — EXISTING TELEPHONE CABLES UNDERGROUND
- INTERSTATE HIGHWAY
- U. S. HIGHWAY
- STATE HIGHWAY

2009 OKLAHOMA STANDARD SPECIFICATIONS FOR HIGHWAY CONSTRUCTION - ENGLISH GOVERN APPROVED BY THE U. S. DEPARTMENT OF TRANSPORTATION. FEDERAL HIGHWAY ADMINISTRATION. JANUARY 4, 2010

ROADWAY LENGTH	5,082.47 FT.		0.962 MILES
BRIDGE LENGTH	0.00 FT.		0.000 MILES
PROJECT LENGTH	5,082.47 FT.		0.962 MILES
EQUATIONS	NONE		
EXCEPTIONS	NONE		

PREPARED AND SUBMITTED BY:

POE & ASSOCIATES INC.
Oklahoma City, Oklahoma

9-9-16
THOMAS S. EVANS, P.E. Date
Okla. Registered Professional Engineer No. 25204

THOMAS S. EVANS 25204 OKLAHOMA LICENSED PROFESSIONAL ENGINEER

9-9-16
TIMOTHY RAY PURKEYPILE DATE
Okla. Registered Professional Engineer No. 16021

TIMOTHY RAY PURKEYPILE 16021 OKLAHOMA REGISTERED PROFESSIONAL ENGINEER

OKLAHOMA DEPARTMENT OF TRANSPORTATION	DEPARTMENT OF TRANSPORTATION FEDERAL HIGHWAY ADMINISTRATION
APPROVED DATE	APPROVED DATE
CHIEF ENGINEER	DIVISION ADMINISTRATOR

F. A. Project No. NHPPI-0240-1(358)004SS Sht. No. 1

SEPT 09, 2016 - 10:34:57
H:\PROJECTS\2789_CrossRoads_InterX_New\PHASE IA\Roadway\Drawings\2789-PHASE 1A-TITLESHT.DWG

REVISIONS	
DESCRIPTION	DATE

INDEX OF SHEETS

SHEET NO.	DESCRIPTION
1	TITLE SHEET
2	INDEX OF SHEETS
3	OVERVIEW MAP I-240/I-35 INTERCHANGE
4-18	TYPICAL SECTIONS
19-23	INTERCHANGE GEOMETRIC LAYOUT & POINT COORDINATE TABLES
24-25	TRAFFIC DATA SHEETS
26	STORM WATER MANAGEMENT SHEET
27-31	DRAINAGE MAPS
32-35	DRAINAGE STRUCTURE DESIGN RECORD
36-37	SUMMARY OF PAY QUANTITIES & NOTES - ROADWAY
38	MSE RETAINING WALL NOTES
39	SUMMARY OF PAY QUANTITIES & NOTES (WATER LINE RELOCATION
40	SUMMARY OF PAY QUANTITIES & NOTES (SANITARY SEWER LINE RELOCATION
41	SUMMARY OF PAY QUANTITIES, NOTES AND SIGN SUMMARY - SIGNING & STRIPING
42	GENERAL CONSTRUCTION NOTES - SIGNING AND STRIPING
43	SUMMARY OF PAY QUANTITIES & NOTES - TRAFFIC OPERATIONS
43A	GENERAL CONSTRUCTION NOTES & SUMMARY - TRAFFIC OPERATIONS
44-47	SUMMARY OF DRAINAGE STRUCTURES
48	SUMMARY OF REMOVALS AND DETAILS
49	SUMMARY OF SURFACING QUANTITIES
50-51	SCHEDULES AND SUMMARIES
52	LONGITUDINAL BARRIER SCHEDULES
52A	F-SHAPED PARAPET AND MOMENT SLAB DETAILS
53-58	EROSION CONTROL SHEETS
59-63	RIGHT-OF-WAY DETAIL SHEETS
64-69	REMOVAL SHEETS
70-71	PLAN & PROFILE SHEETS ~ I-240
72-74	PLAN & PROFILE SHEETS ~ RAMP 'G'
75	PLAN & PROFILE SHEETS ~ I-35
76	PLAN & PROFILE SHEETS ~ RAMP 'C'
77	PLAN & PROFILE SHEETS ~ RAMP 'M'
78-81	PLAN & PROFILE SHEETS ~ S.W. SERVICE RD.
82	PLAN & PROFILE SHEETS ~ CHANNEL 'A'
83-85	RAMP TERMINAL DETAILS (PENDING)
86-90	JOINT LAYOUT SHEET
91	RETAINING WALL LOCATION MAP
92-93	MSE RETAINING WALL 'A' ~ PLAN & ELEVATION
94-97	FOUNDATION REPORT-BORES 'A'
98	MSE RETAINING WALL 'E2" ~ PLAN & ELEVATION
99	FOUNDATION REPORT-BORES 'E'
100-101	MSE RETAINING WALL DETAILS
101A	CONCRETE TRAFFIC RAIL TRANSITION DETAIL
102	RETAINING WALL 'N' ~ PLAN & ELEVATION
103	FOUNDATION REPORT-BORES 'N'
104-105	CIP RETAINING WALL DETAILS
106-107	SPECIAL JUNCTION BOX DETAILS
108	SPECIAL JUNCTION BOX ORIENTATION DETAILS
109	R.C.B. EXTENSION PAY QUANTITIES AND GEN. NOTES - STRUCTURE CD1
109A-109C	R.C.B. EXTENSION DETAILS
110	DETAIL STR. G27 SPECIAL CICI-JUNCTION BOX DES. 2 & 3
111	TEMPORARY INLET SEDIMENT FILTER
112-113	SPECIAL SIGN & SIGN STRUCTURE DETAILS
114-121	SIGNING & STRIPING SHEETS
M1-M7	MONOTUBE STRUCTURE DETAIL SHEETS
TC1	GENERAL SEQUENCE OF CONSTRUCTION
TC2-TC11	TRAFFIC CONTROL PLANS ~ PHASE I, STEP I
TC12TC19	TRAFFIC CONTROL PLANS ~ PHASE II
TC20	TRAFFIC CONTROL PLAN SE 82nd ST ROUTING DETAIL
TC21	TRAFFIC CONTROL PLANS SPECIAL SIGNS
WL01-WL13	WATER LINE RELOCATION PLANS WC-0816
SS01-SS08	SANITARY SEWER RELOCATION PLANS SC-0976
SS09-SS12	SANITARY SEWER STANDARD DETAIL SHEETS
SD01-SD46	SURVEY DATA SHEETS
X1-X11	CROSS SECTIONS ~ I-240
X12-X16	CROSS SECTIONS ~ RAMP 'C'
X17-X44	CROSS SECTIONS ~ RAMP 'G'
X45-X53	CROSS SECTIONS ~ RAMP 'M'
X54-X90	CROSS SECTIONS ~ S.W. SERVICE RD.
X91-X92	CROSS SECTIONS ~ CHANNEL "A"

THE FOLLOWING ODOT STANDARDS WILL BE REQUIRED:

ROADWAY & BRIDGE:

SSS-1-1	SPI-4-1
TSC2-3-2	SPB-1-4
TSD-2-0	FHTCP-3-1
TFL-1-1	SBI-4-2
TRFD-1-2	PUD-3-2
CSCD-5-3	CLB-1-2
LECS-4-1	DC-3-2
LTU-4-0	PDT-13
PR-3-0	SUEL1-3-2
PCPR-3-1	SUEL3-3-2
PED-3-2	TR4-2-00E
WCR-3-1	FSHP-42-2-00E
TWD-1-0	RCB-C1-10(2-14)-01E
PCES-4-1	RCB-C2-8(2-12)-01E
SMD-3-1	RCB-E1-H4-0-1-01E
CI-1-2	RCB-E1-H4-0-2-01E
SSIF-4-0	RCB-E1-H5-0-1-01E
CIG-3-0	RCB-E1-H5-0-2-01E
MFC-4-1	RCB-CW1-D4-0-01E
MJB-3-1	RCB-CW2-D4-0-01E

SIGNING & STRIPING:

PM1-1-02	SBS5-1-00
PM4-1-01	GMS1-1-00
PM6-1-00	SSA2-1-00
PM7-1-00	FGS1-1-00
WSD2-1-00	FGS2-1-01
MSD1-1-00	SPA1-1-00
MSD2-1-00	
MSD3-1-01	
MSD4-1-00	
MSD5-1-00	
SIS3-1-01	
SIS4-1-00	
SBS1-1-00	
SBS2-1-00	
SBS3-1-00	
SBS4-1-00	

TRAFFIC OPERATIONS:

TCS1-1-01	TCS20-1-00
TCS2-1-00	TCS21-1-02
TCS3-1-01	TCS23-1-00
TCS4-1-01	TCS24-1-02
TCS5-1-00	
TCS6-1-02	
TCS7-1-02	
TCS8-1-00	
TCS9-1-01	
TCS10-1-00	
TCS11-1-01	
TCS13-1-00	
TCS14-1-00	
TCS17-1-00	
TCS18-1-01	
TCS19-1-01	

Design		
Drawn		
Checked		
Approved		
Squad	POE	

INDEX OF SHEETS

State Job No. 09032(17) Sheet No. 2

SEPT 14, 2016 - 13:31:38
H:\PROJECTS\2789_CrossRoads_InterX_New\PHASE IA\Roadway\Drawings\2789-PHASE 1A_INDEX OF SHEETS.DWG

OVERVIEW MAP
I-240/I-35 INTERCHANGE

POE & ASSOCIATES, INC.
OKLAHOMA CITY

REVISIONS		
	DESCRIPTION	DATE
1	ADDED DRIVE	09/23/16

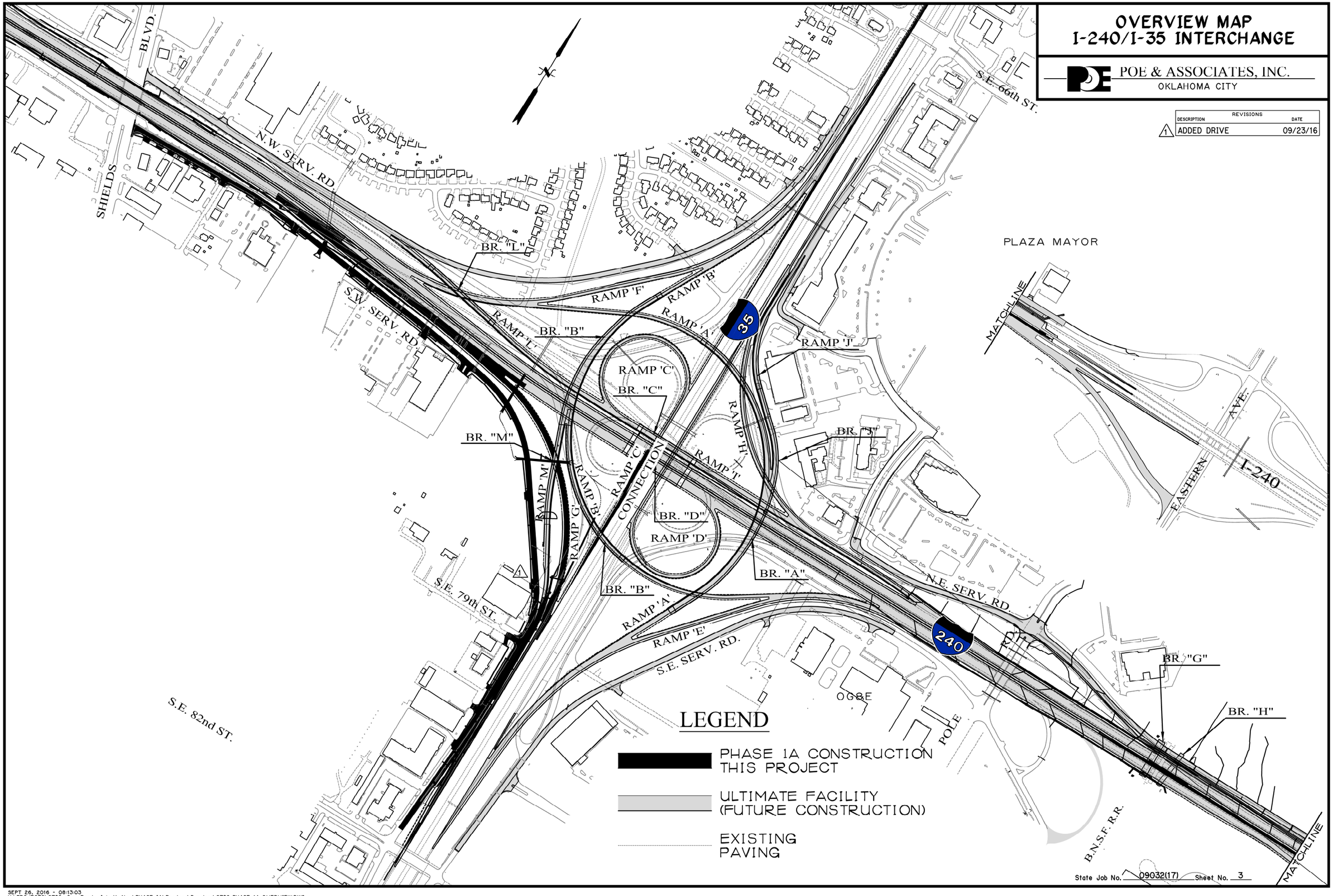

LEGEND

PHASE 1A CONSTRUCTION THIS PROJECT

ULTIMATE FACILITY (FUTURE CONSTRUCTION)

EXISTING PAVING

State Job No. 09032(17) Sheet No. 3

SEPT 26, 2016 - 08:13:03
H:\PROJECTS\2789_CrossRoads_InterX_New\PHASE 1A\Roadway\Drawings\2789-PHASE 1A-OVERVIEW.DWG

REVISIONS	
DESCRIPTION	DATE

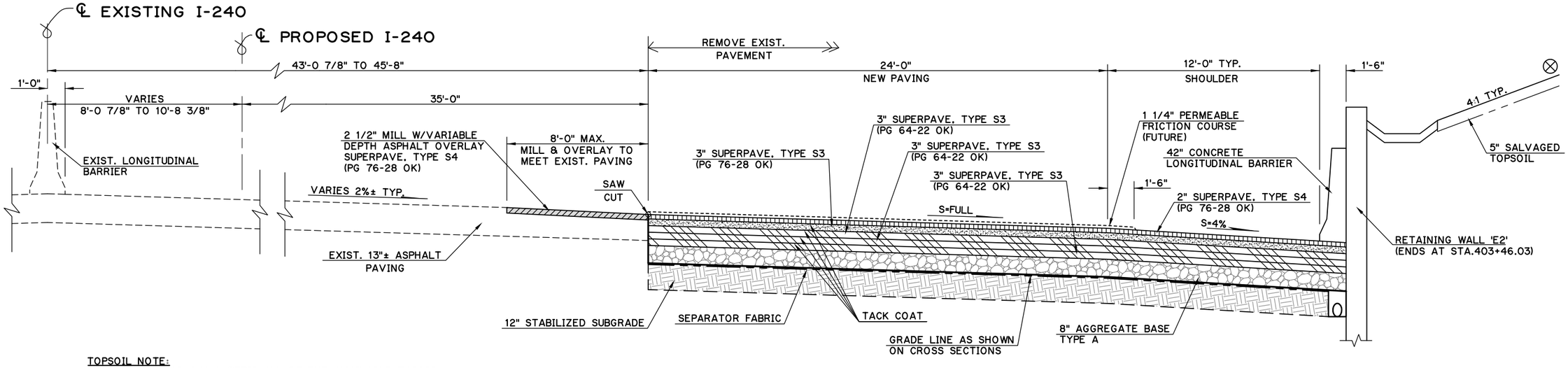

② TYPICAL SECTION

I-240 EAST BOUND
STA.403+00.00 TO STA.403+46.03

TOPSOIL NOTE:
THE CONTRACTOR SHALL STRIP ALL OF THE AVAILABLE TOPSOIL, STOCKPILE IT, AND PLACE IT BACK ON THE SECTION IN ACCORDANCE WITH SECTION 205 OF THE STANDARD SPECIFICATIONS. RESERVED TOPSOIL SHALL BE SPREAD FIRST ON THE COMPLETED SLOPES OF THE CUT SECTIONS AND THE REMAINDER ON COMPLETED FILL SLOPES OR OTHER PRIORITY AREAS LOCATED BY THE ENGINEER. ALL ADDITIONAL COSTS ASSOCIATED WITH OPERATION SHALL BE INCLUDED IN THE PAY ITEM FOR SALVAGED TOPSOIL, LUMP SUM.

THE GRADING LINE AS SHOWN ON THE TYPICAL AND CROSS SECTIONS IS TO THE TOP OF THE TOPSOIL. EARTHWORK QUANTITIES WERE NOT ADJUSTED FOR SALVAGE.

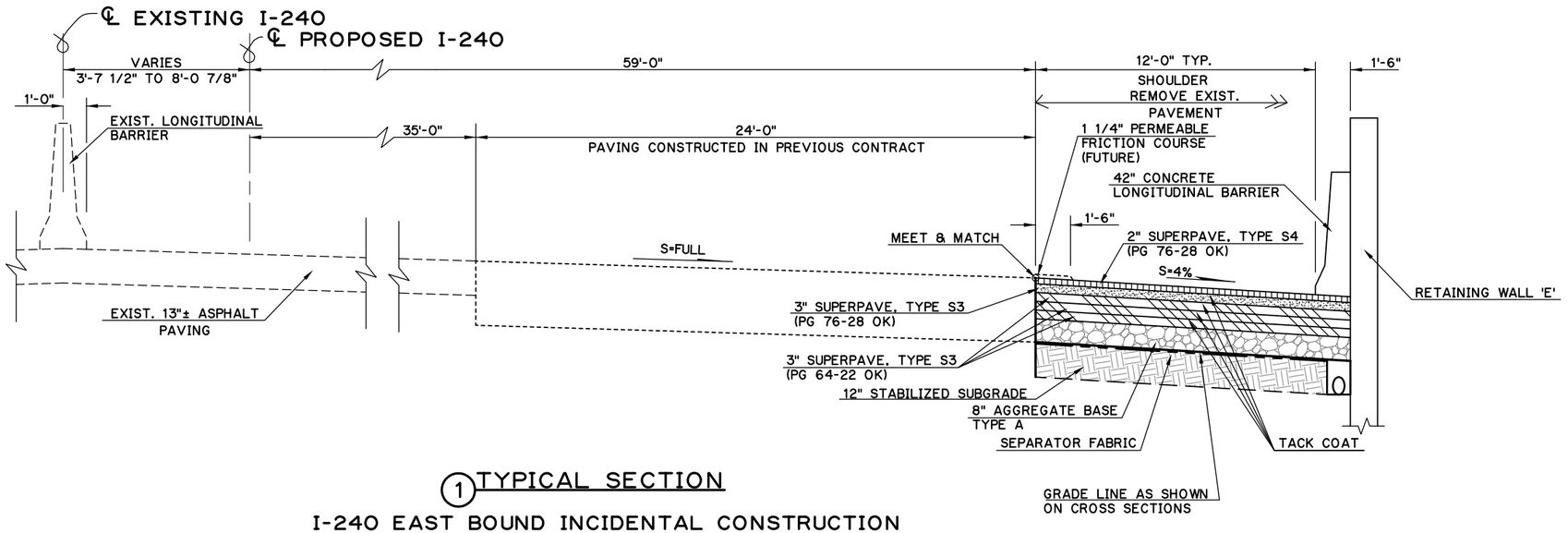

① TYPICAL SECTION

I-240 EAST BOUND INCIDENTAL CONSTRUCTION
STA.402+00.00 TO STA.403+00.00

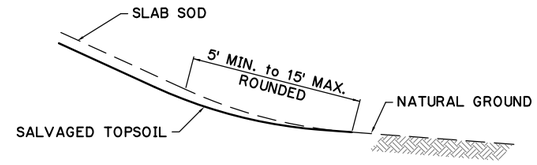

TOE OF FILL ROUNDING

⊗ INTERSECTION OF CUT AND FILL SLOPES WITH THE GROUND LINE ARE TO BE ROUNDED AS A PART OF FINISHING OPERATIONS. ROUNDING SHALL BE 5' MINIMUM FOR SMALLER CUTS AND FILLS, TO 15' MAXIMUM FOR LARGER CUTS AND FILLS OR AS DESIGNATED BY THE ENGINEER. COST OF ROUNDING TO BE INCLUDED IN THE PRICE BID FOR OTHER ITEMS OF WORK.

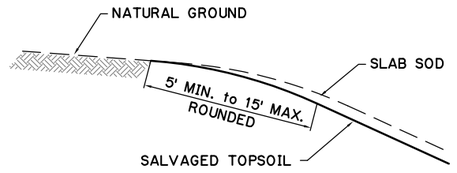

TOP OF CUT ROUNDING

ROUNDING DETAIL

Design		
Drawn		
Checked		
Approved		
Squad	POE	

TYPICAL SECTION EAST BOUND I-240

State Job No. 09032(17) Sheet No. 4

SEPT 08, 2016 - 15:23:39
H:\PROJECTS\2789_CrossRoads_InterX_New\PHASE IA\Roadway\Drawings\2789-PHASE 1A_TYPSECTIONS-I240.DWG

REVISIONS	
DESCRIPTION	DATE

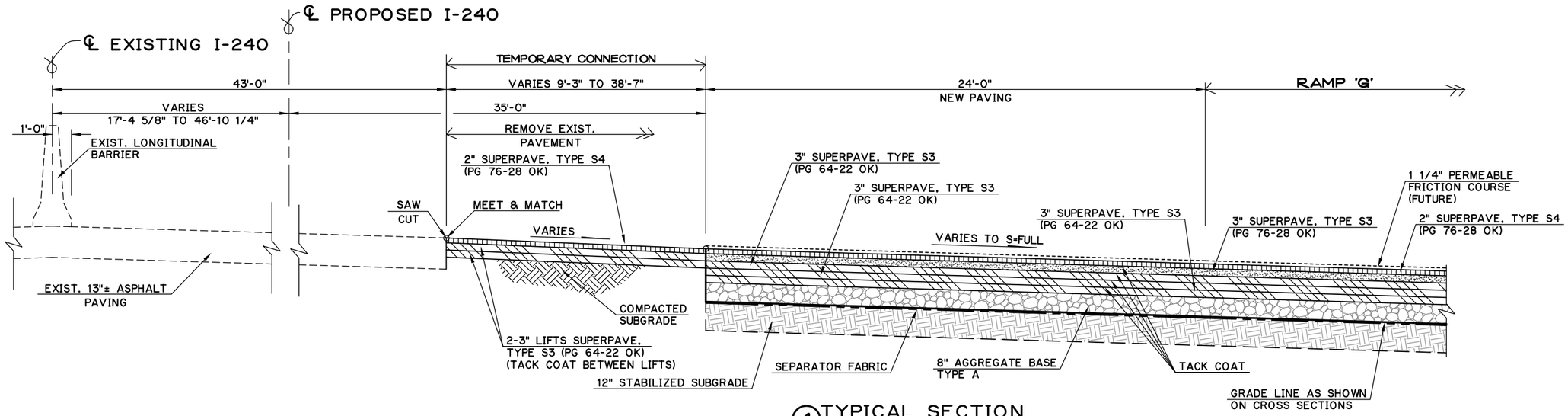

④ TYPICAL SECTION

I-240 EAST BOUND TEMPORARY CONNECTION

STA.404+42.00 TO STA.407+32.00

TOPSOIL NOTE:
THE CONTRACTOR SHALL STRIP ALL OF THE AVAILABLE TOPSOIL, STOCKPILE IT, AND PLACE IT BACK ON THE SECTION IN ACCORDANCE WITH SECTION 205 OF THE STANDARD SPECIFICATIONS. RESERVED TOPSOIL SHALL BE SPREAD FIRST ON THE COMPLETED SLOPES OF THE CUT SECTIONS AND THE REMAINDER ON COMPLETED FILL SLOPES OR OTHER PRIORITY AREAS LOCATED BY THE ENGINEER. ALL ADDITIONAL COSTS ASSOCIATED WITH OPERATION SHALL BE INCLUDED IN THE PAY ITEM FOR SALVAGED TOPSOIL, LUMP SUM.

THE GRADING LINE AS SHOWN ON THE TYPICAL AND CROSS SECTIONS IS TO THE TOP OF THE TOPSOIL. EARTHWORK QUANTITIES WERE NOT ADJUSTED FOR SALVAGE.

⊗ INTERSECTION OF CUT AND/OR FILL SLOPES WITH GROUND LINE TO BE ROUNDED AS PART OF FINISHING OPERATIONS. ROUNDING SHALL BE 5' MIN. FOR SMALLER CUTS AND FILLS, TO 15' MAX. FOR LARGER CUTS AND FILLS, OR AS DESIGNATED BY THE ENGINEER. COST OF ROUNDING TO BE INCLUDED IN PRICE BID FOR OTHER ITEMS OF WORK. SEE ROUNDING DETAIL SHEET 3A.

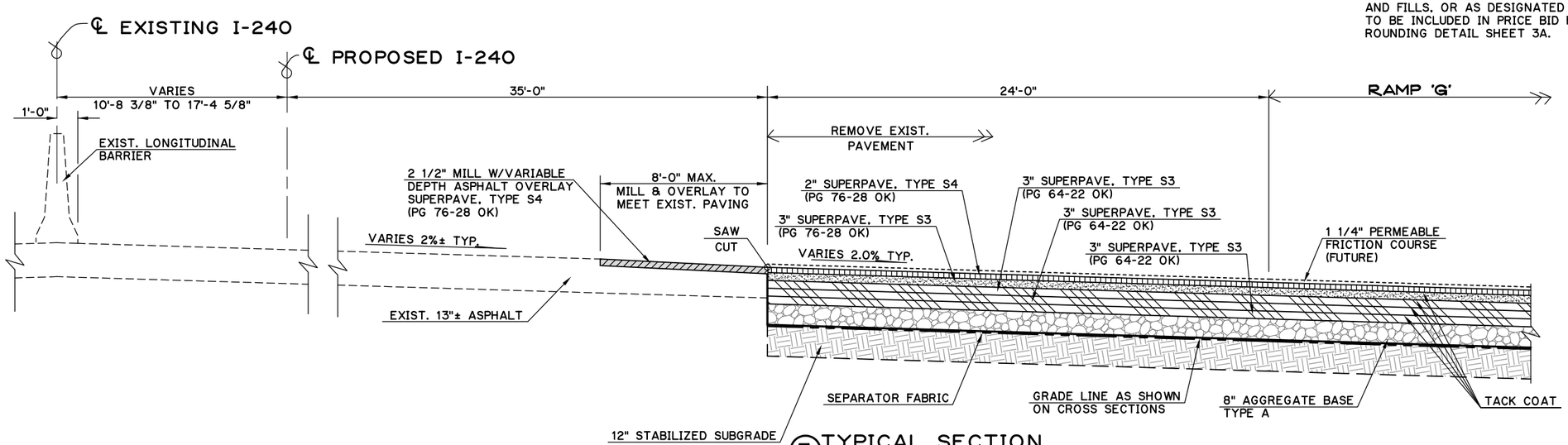

③ TYPICAL SECTION

I-240 EAST BOUND

STA.403+46.03 TO STA.404+42.00

Design		
Drawn		
Checked		
Approved		
Squad	POE	

TYPICAL SECTIONS EAST BOUND I-240

State Job No. 09032(17) Sheet No. 5

SEPT 08, 2016 - 15:23:39
H:\PROJECTS\2789_CrossRoads_InterX_New\PHASE IA\Roadway\Drawings\2789-PHASE 1A_TYPSECTIONS-I240.DWG

REVISIONS	
DESCRIPTION	DATE

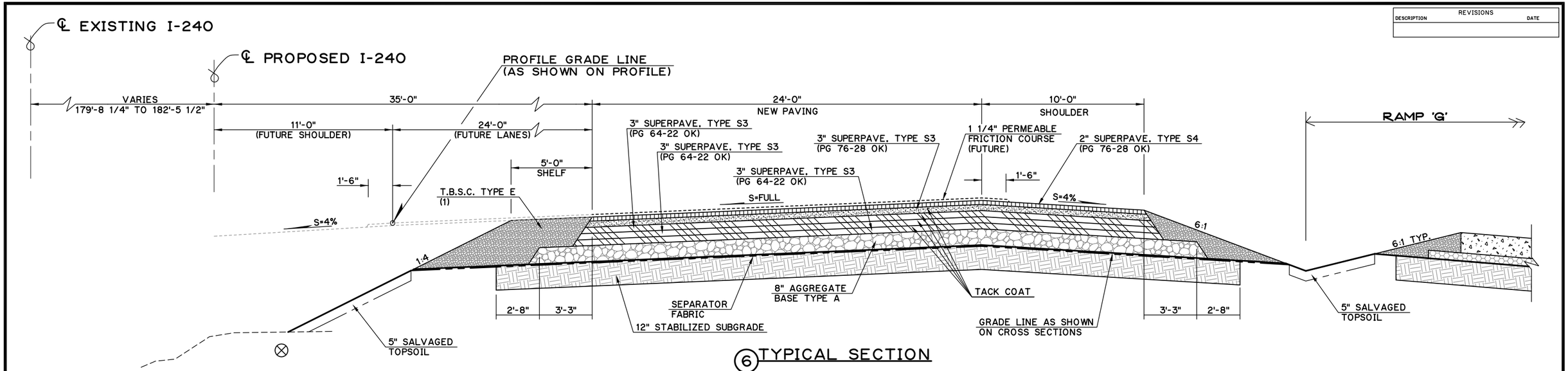

⑥ TYPICAL SECTION

I-240 EAST BOUND

STA.419+55.70 TO STA.420+00.00

TOPSOIL NOTE:
THE CONTRACTOR SHALL STRIP ALL OF THE AVAILABLE TOPSOIL, STOCKPILE IT, AND PLACE IT BACK ON THE SECTION IN ACCORDANCE WITH SECTION 205 OF THE STANDARD SPECIFICATIONS. RESERVED TOPSOIL SHALL BE SPREAD FIRST ON THE COMPLETED SLOPES OF THE CUT SECTIONS AND THE REMAINDER ON COMPLETED FILL SLOPES OR OTHER PRIORITY AREAS LOCATED BY THE ENGINEER. ALL ADDITIONAL COSTS ASSOCIATED WITH OPERATION SHALL BE INCLUDED IN THE PAY ITEM FOR SALVAGED TOPSOIL, LUMP SUM.

THE GRADING LINE AS SHOWN ON THE TYPICAL AND CROSS SECTIONS IS TO THE TOP OF THE TOPSOIL. EARTHWORK QUANTITIES WERE NOT ADJUSTED FOR SALVAGE.

⊗ INTERSECTION OF CUT AND/OR FILL SLOPES WITH GROUND LINE TO BE ROUNDED AS PART OF FINISHING OPERATIONS. ROUNDING SHALL BE 5' MIN. FOR SMALLER CUTS AND FILLS, TO 15' MAX. FOR LARGER CUTS AND FILLS, OR AS DESIGNATED BY THE ENGINEER. COST OF ROUNDING TO BE INCLUDED IN PRICE BID FOR OTHER ITEMS OF WORK. SEE ROUNDING DETAIL SHEET 3A.

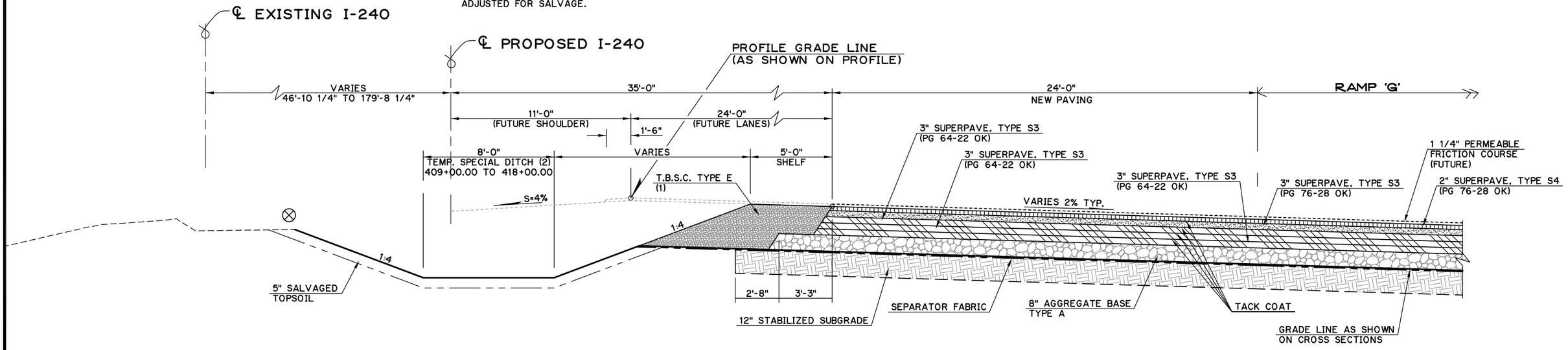

(1) BACKFILL NOTE:
THIS AREA TO BE BACKFILLED AND COMPACTED USING TRAFFIC BOUND SURFACE COURSE, TYPE E.

(2) TO BE REMOVED IN FUTURE PHASES.

⑤ TYPICAL SECTION

I-240 EAST BOUND

STA.407+32.00 TO STA.419+55.70

Design		
Drawn		
Checked		
Approved		
Squad	POE	

TYPICAL SECTIONS EAST BOUND I-240

State Job No. 09032(17) Sheet No. 6

SEPT 08, 2016 - 15:23:39
H:\PROJECTS\2789_CrossRoads_InterX_New\PHASE IA\Roadway\Drawings\2789-PHASE 1A_TYPSECTIONS-I240.DWG

REVISIONS	
DESCRIPTION	DATE

TO BE BACKFILLED AND COMPACTED AS PART OF FINISHING OPERATIONS. COST TO BE INCLUDED IN PRICE BID FOR OTHER ITEMS OF WORK.

TOPSOIL NOTE:
THE CONTRACTOR SHALL STRIP ALL OF THE AVAILABLE TOPSOIL, STOCKPILE IT, AND PLACE IT BACK ON THE SECTION IN ACCORDANCE WITH SECTION 205 OF THE STANDARD SPECIFICATIONS. RESERVED TOPSOIL SHALL BE SPREAD FIRST ON THE COMPLETED SLOPES OF THE CUT SECTIONS AND THE REMAINDER ON COMPLETED FILL SLOPES OR OTHER PRIORITY AREAS LOCATED BY THE ENGINEER. ALL ADDITIONAL COSTS ASSOCIATED WITH OPERATION SHALL BE INCLUDED IN THE PAY ITEM FOR SALVAGED TOPSOIL, LUMP SUM.

THE GRADING LINE AS SHOWN ON THE TYPICAL AND CROSS SECTIONS IS TO THE TOP OF THE TOPSOIL. EARTHWORK QUANTITIES WERE NOT ADJUSTED FOR SALVAGE.

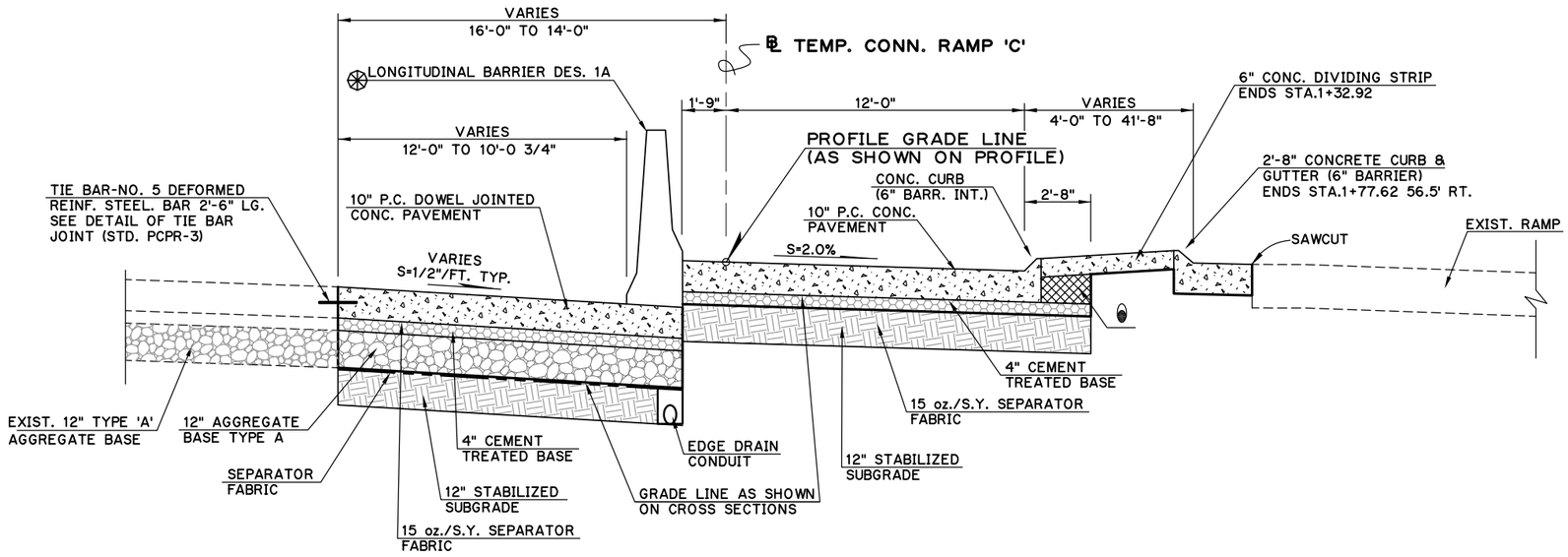

② TYPICAL SECTION
TEMPORARY CONNECTION RAMP 'C'
STA.1+12.97 TO STA.1+75.00

⊛ DES. 1A LONGITUDINAL BARRIER EXTENTS:
STA.1+00.00 TO STA.2+00.00

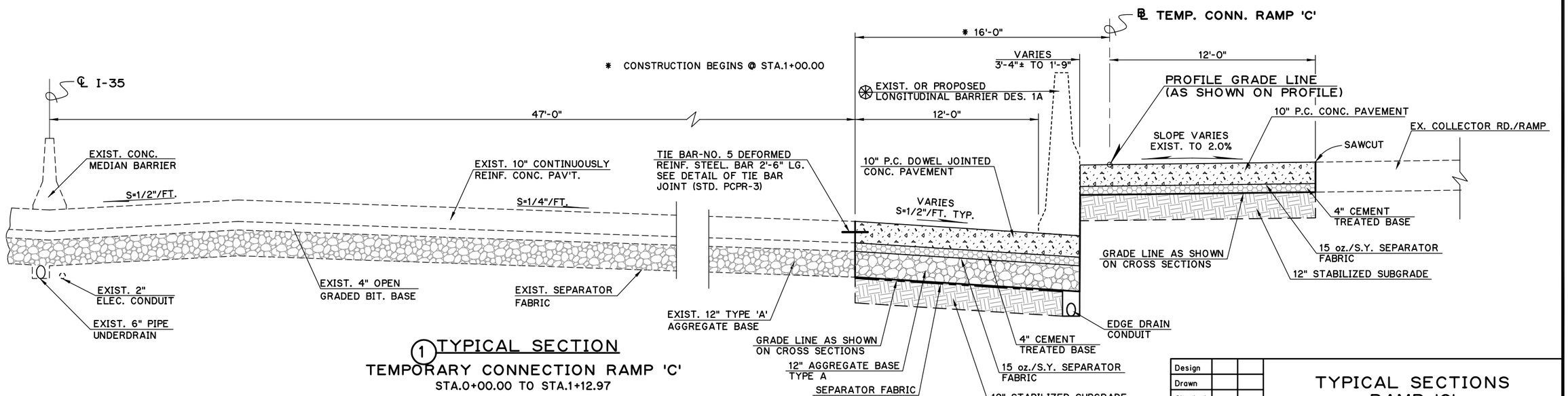

① TYPICAL SECTION
TEMPORARY CONNECTION RAMP 'C'
STA.0+00.00 TO STA.1+12.97

Design		
Drawn		
Checked		
Approved		
Squad	POE	

TYPICAL SECTIONS RAMP 'C'

State Job No. 09032(17) Sheet No. 7

SEPT 08, 2016 - 08:09:37
H:\PROJECTS\2789_CrossRoads_InterX_New\PHASE IA\Roadway\Drawings\2789-PHASE 1A_TYPSECTIONS-RAMPS.DWG

REVISIONS	
DESCRIPTION	DATE

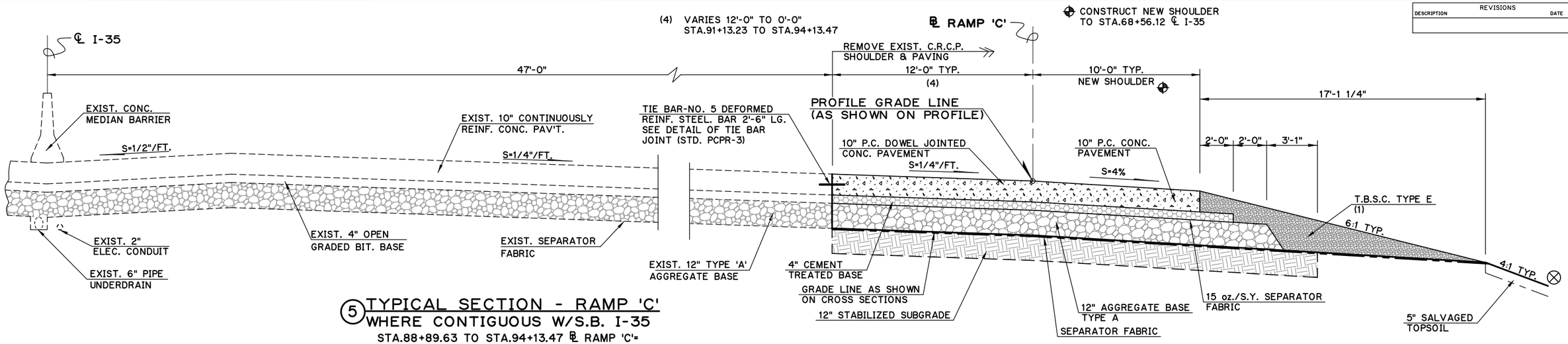

(5) TYPICAL SECTION - RAMP 'C' WHERE CONTIGUOUS W/S.B. I-35

STA.88+89.63 TO STA.94+13.47 ℄ RAMP 'C'=
STA.70+17.02 TO STA.75+40.62 ℄ I-35
(FOR SPECIAL DITCH SEE RAMP 'G' TYP. 3)

(1) BACKFILL NOTE:
THIS AREA TO BE BACKFILLED AND COMPACTED USING TRAFFIC BOUND SURFACE COURSE, TYPE E.

TOPSOIL NOTE:
THE CONTRACTOR SHALL STRIP ALL OF THE AVAILABLE TOPSOIL, STOCKPILE IT, AND PLACE IT BACK ON THE SECTION IN ACCORDANCE WITH SECTION 205 OF THE STANDARD SPECIFICATIONS. RESERVED TOPSOIL SHALL BE SPREAD FIRST ON THE COMPLETED SLOPES OF THE CUT SECTIONS AND THE REMAINDER ON COMPLETED FILL SLOPES OR OTHER PRIORITY AREAS LOCATED BY THE ENGINEER. ALL ADDITIONAL COSTS ASSOCIATED WITH OPERATION SHALL BE INCLUDED IN THE PAY ITEM FOR SALVAGED TOPSOIL, LUMP SUM.

THE GRADING LINE AS SHOWN ON THE TYPICAL AND CROSS SECTIONS IS TO THE TOP OF THE TOPSOIL. EARTHWORK QUANTITIES WERE NOT ADJUSTED FOR SALVAGE.

⊗ INTERSECTION OF CUT AND/OR FILL SLOPES WITH GROUND LINE TO BE ROUNDED AS PART OF FINISHING OPERATIONS. ROUNDING SHALL BE 5' MIN. FOR SMALLER CUTS AND FILLS, TO 15' MAX. FOR LARGER CUTS AND FILLS, OR AS DESIGNATED BY THE ENGINEER. COST OF ROUNDING TO BE INCLUDED IN PRICE BID FOR OTHER ITEMS OF WORK. SEE ROUNDING DETAIL SHEET 3A.

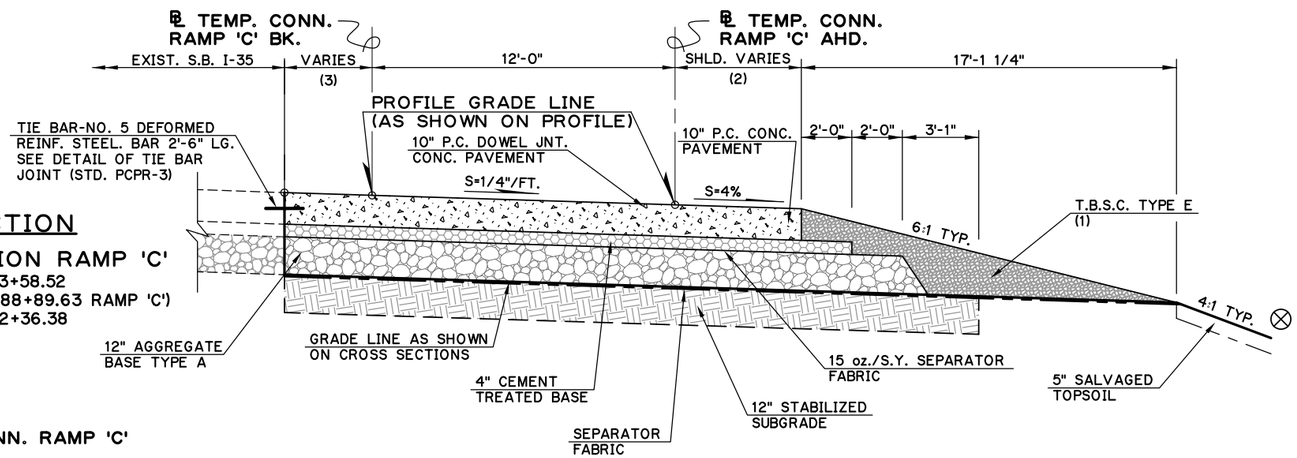

(4) TYPICAL SECTION TEMPORARY CONNECTION RAMP 'C'

STA.2+00.00 TO STA.3+58.52
(STA.3+58.52 TEMP. CONN. = STA.88+89.63 RAMP 'C')
SHIFT BL 12' RT. STA.2+36.38

(2) VARIES 0'-0" TO 10'-0"
STA.2+19.12 TO STA.3+58.52

(3) VARIES 12'-0 3/4" TO 0'-0"

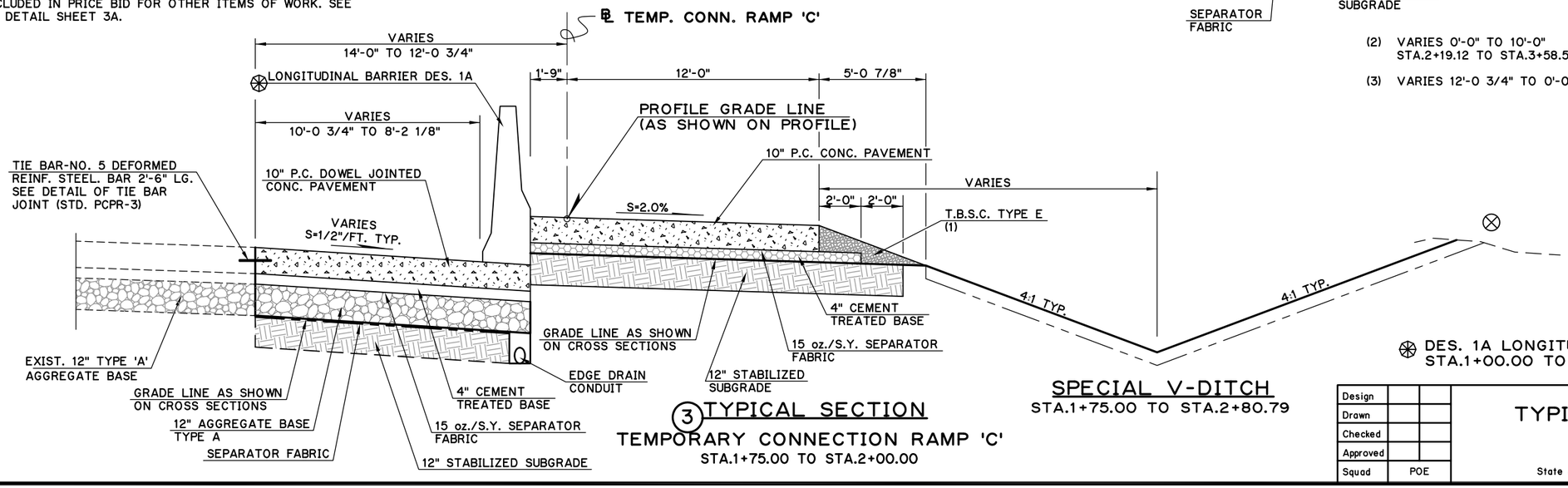

(3) TYPICAL SECTION TEMPORARY CONNECTION RAMP 'C'

STA.1+75.00 TO STA.2+00.00

SPECIAL V-DITCH

STA.1+75.00 TO STA.2+80.79

⊗ DES. 1A LONGITUDINAL BARRIER EXTENTS:
STA.1+00.00 TO STA.2+00.00

Design		
Drawn		
Checked		
Approved		
Squad	POE	

TYPICAL SECTIONS RAMP 'C'

State Job No. 09032(17) Sheet No. 8

SEPT 08, 2016 - 08:09:37
H:\PROJECTS\2789_CrossRoads_InterX_New\PHASE IA\Roadway\Drawings\2789-PHASE 1A_TYPSECTIONS-RAMPS.DWG

REVISIONS	
DESCRIPTION	DATE

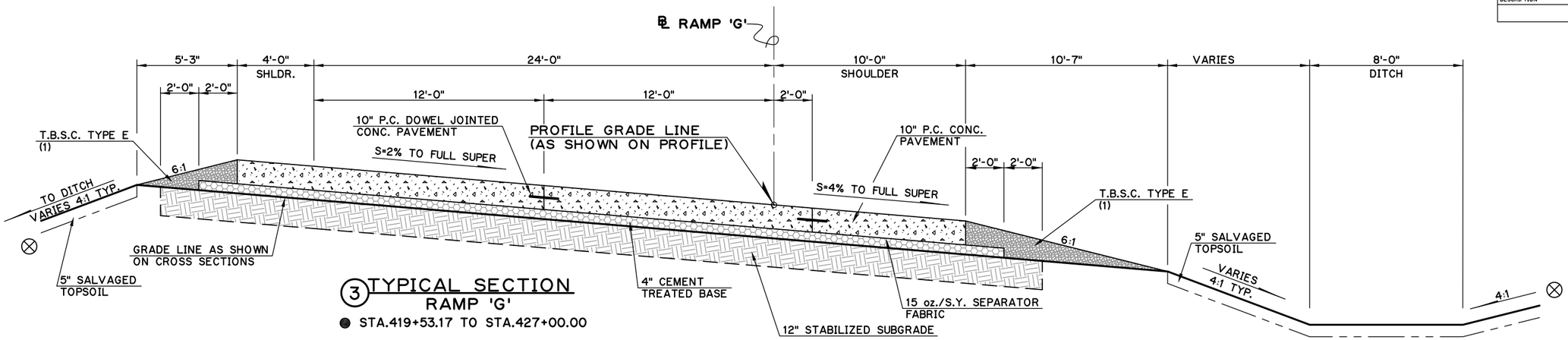

③ TYPICAL SECTION RAMP 'G'

● STA.419+53.17 TO STA.427+00.00

SPECIAL DITCH WHERE SHOWN ON PLANS

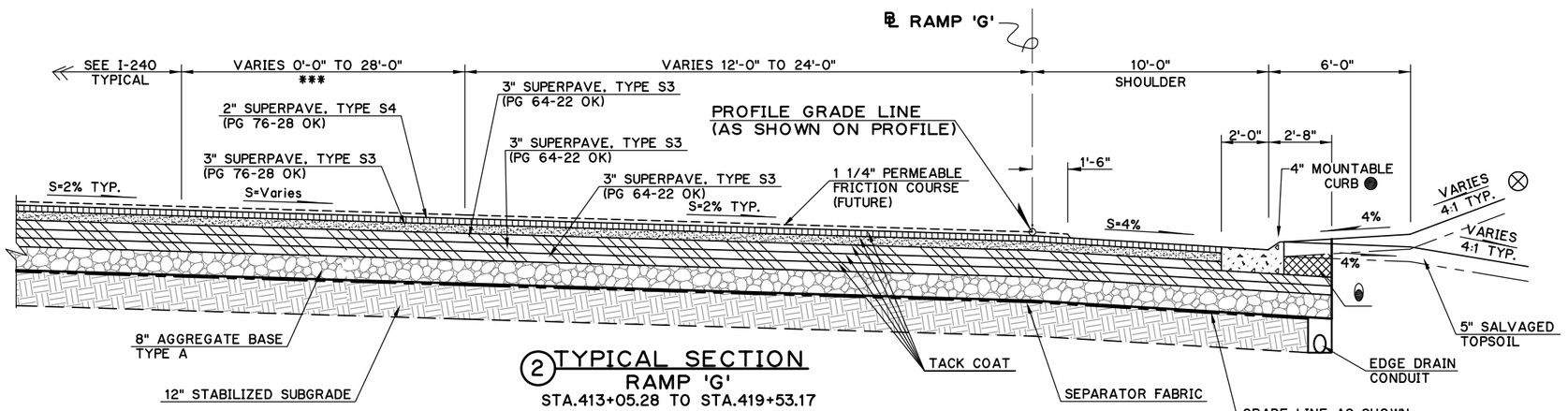

② TYPICAL SECTION RAMP 'G'

STA.413+05.28 TO STA.419+53.17

*** VARIES 0'-0" TO 28'-0"

STA.416+79.83 TO STA.419+53.17

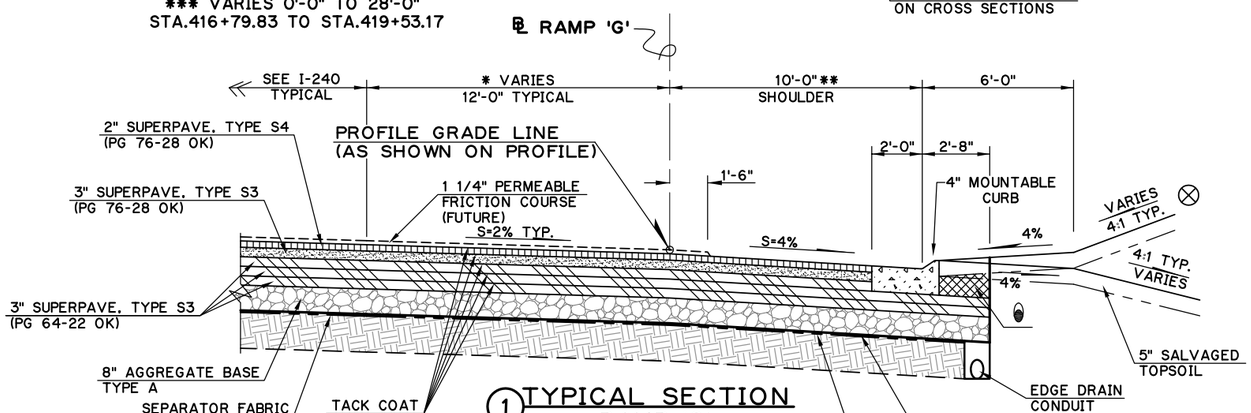

① TYPICAL SECTION RAMP 'G'

STA.403+46.03 TO STA.413+05.28

* VARIES 0'-0" TO 12'-0"

STA.403+46.03 TO STA.406+42.84

** VARIES 12'-0" TO 10'-0"

STA.403+46.03 TO STA.403+77.68

● 4" MOUNTABLE CURB END AT 420+00.00 (SEE TYPICAL SECTION 4)

(1) BACKFILL NOTE:
THIS AREA TO BE BACKFILLED AND COMPACTED USING TRAFFIC BOUND SURFACE COURSE, TYPE E.

TOPSOIL NOTE:
THE CONTRACTOR SHALL STRIP ALL OF THE AVAILABLE TOPSOIL, STOCKPILE IT, AND PLACE IT BACK ON THE SECTION IN ACCORDANCE WITH SECTION 205 OF THE STANDARD SPECIFICATIONS. RESERVED TOPSOIL SHALL BE SPREAD FIRST ON THE COMPLETED SLOPES OF THE CUT SECTIONS AND THE REMAINDER ON COMPLETED FILL SLOPES OR OTHER PRIORITY AREAS LOCATED BY THE ENGINEER. ALL ADDITIONAL COSTS ASSOCIATED WITH OPERATION SHALL BE INCLUDED IN THE PAY ITEM FOR SALVAGED TOPSOIL, LUMP SUM.

THE GRADING LINE AS SHOWN ON THE TYPICAL AND CROSS SECTIONS IS TO THE TOP OF THE TOPSOIL. EARTHWORK QUANTITIES WERE NOT ADJUSTED FOR SALVAGE.

⊗ INTERSECTION OF CUT AND/OR FILL SLOPES WITH GROUND LINE TO BE ROUNDED AS PART OF FINISHING OPERATIONS. ROUNDING SHALL BE 5' MIN. FOR SMALLER CUTS AND FILLS, TO 15' MAX. FOR LARGER CUTS AND FILLS, OR AS DESIGNATED BY THE ENGINEER. COST OF ROUNDING TO BE INCLUDED IN PRICE BID FOR OTHER ITEMS OF WORK. SEE ROUNDING DETAIL SHEET 3A.

● TO BE BACKFILLED AND COMPACTED AS PART OF FINISHING OPERATIONS. COST TO BE INCLUDED IN PRICE BID FOR OTHER ITEMS OF WORK.

Design		
Drawn		
Checked		
Approved		
Squad	POE	

TYPICAL SECTIONS RAMP 'G'

State Job No. 09032(17) Sheet No. 9

SEPT 08, 2016 - 08:09:37
H:\PROJECTS\2789_CrossRoads_InterX_New\PHASE IA\Roadway\Drawings\2789-PHASE 1A_TYPSECTIONS-RAMPS.DWG

REVISIONS	
DESCRIPTION	DATE

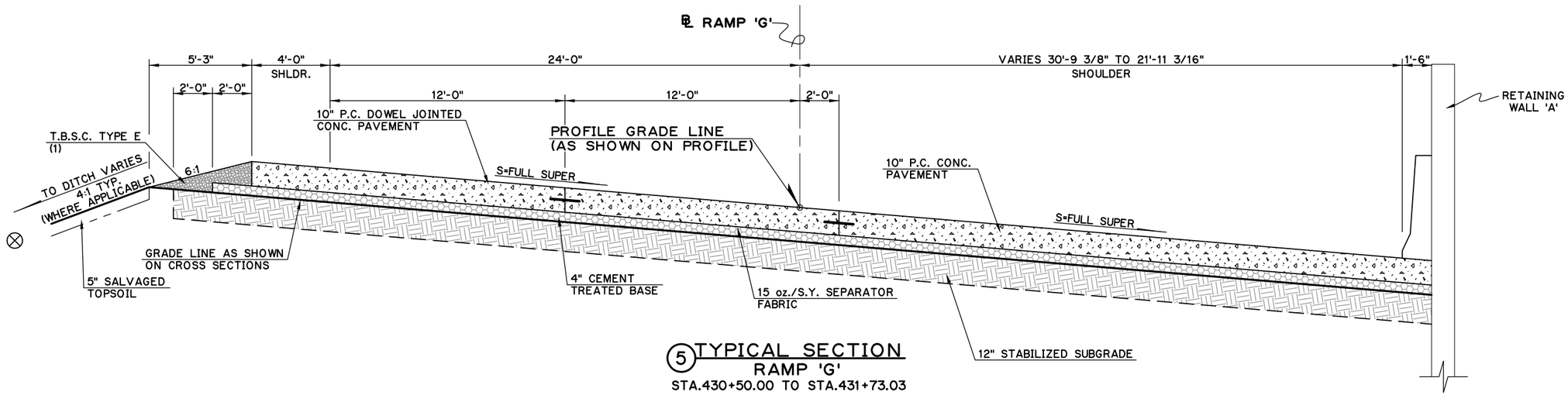

⑤ TYPICAL SECTION
RAMP 'G'
STA.430+50.00 TO STA.431+73.03

(1) BACKFILL NOTE:
THIS AREA TO BE BACKFILLED AND COMPACTED USING TRAFFIC BOUND SURFACE COURSE, TYPE E.

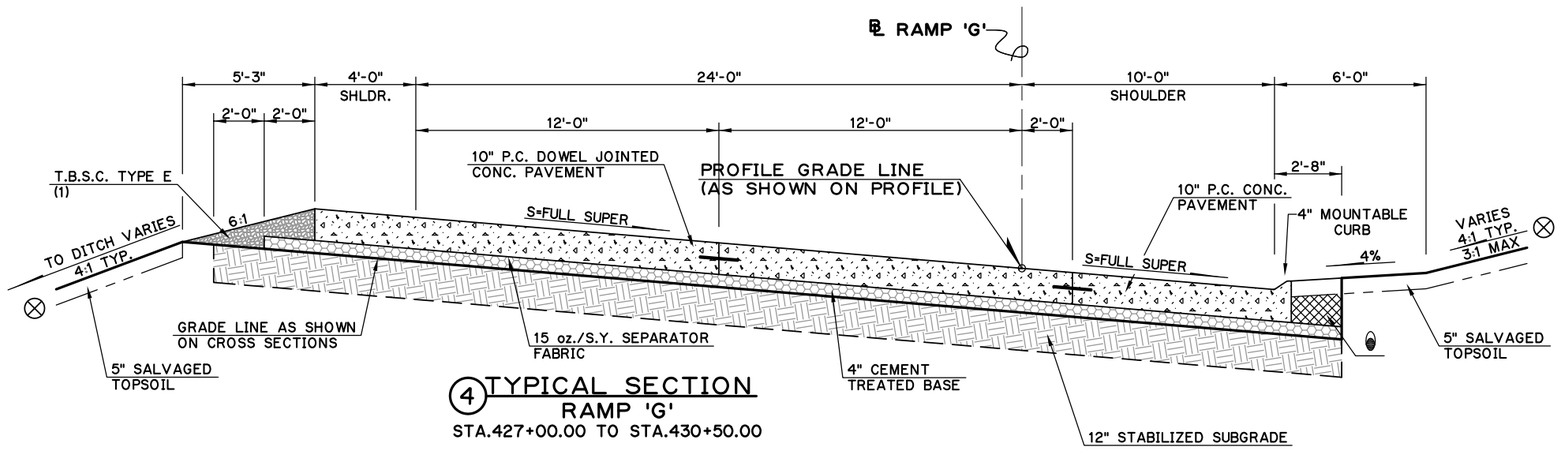

④ TYPICAL SECTION
RAMP 'G'
STA.427+00.00 TO STA.430+50.00

TOPSOIL NOTE:
THE CONTRACTOR SHALL STRIP ALL OF THE AVAILABLE TOPSOIL, STOCKPILE IT, AND PLACE IT BACK ON THE SECTION IN ACCORDANCE WITH SECTION 205 OF THE STANDARD SPECIFICATIONS. RESERVED TOPSOIL SHALL BE SPREAD FIRST ON THE COMPLETED SLOPES OF THE CUT SECTIONS AND THE REMAINDER ON COMPLETED FILL SLOPES OR OTHER PRIORITY AREAS LOCATED BY THE ENGINEER. ALL ADDITIONAL COSTS ASSOCIATED WITH OPERATION SHALL BE INCLUDED IN THE PAY ITEM FOR SALVAGED TOPSOIL, LUMP SUM.

THE GRADING LINE AS SHOWN ON THE TYPICAL AND CROSS SECTIONS IS TO THE TOP OF THE TOPSOIL. EARTHWORK QUANTITIES WERE NOT ADJUSTED FOR SALVAGE.

⊗ INTERSECTION OF CUT AND/OR FILL SLOPES WITH GROUND LINE TO BE ROUNDED AS PART OF FINISHING OPERATIONS. ROUNDING SHALL BE 5' MIN. FOR SMALLER CUTS AND FILLS, TO 15' MAX. FOR LARGER CUTS AND FILLS, OR AS DESIGNATED BY THE ENGINEER. COST OF ROUNDING TO BE INCLUDED IN PRICE BID FOR OTHER ITEMS OF WORK. SEE ROUNDING DETAIL SHEET 3A.

◉ TO BE BACKFILLED AND COMPACTED AS PART OF FINISHING OPERATIONS. COST TO BE INCLUDED IN PRICE BID FOR OTHER ITEMS OF WORK.

Design		
Drawn		
Checked		
Approved		
Squad	POE	

TYPICAL SECTIONS RAMP 'G'

State Job No. 09032(17) Sheet No. 10

SEPT 08, 2016 - 08:09:37
H:\PROJECTS\2789_CrossRoads_InterX_New\PHASE IA\Roadway\Drawings\2789-PHASE 1A_TYPSECTIONS-RAMPS.DWG

REVISIONS	
DESCRIPTION	DATE

▲ SLOPE VARIES STA. 443+00.00 TO STA. 444+89.75 SLOPES 1:3 AND STEEPER WILL BE SLOPEWALL

◩ COST TO BE INCLUDED IN PRICE BID FOR OTHER ITEMS OF WORK

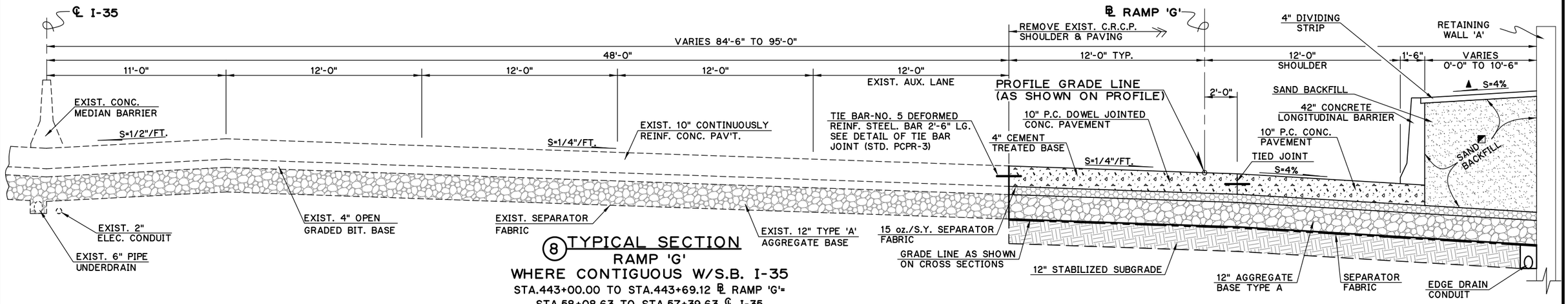

⑧ TYPICAL SECTION
RAMP 'G'
WHERE CONTIGUOUS W/S.B. I-35
STA.443+00.00 TO STA.443+69.12 ℄ RAMP 'G'=
STA.58+08.63 TO STA.57+39.63 ℄ I-35

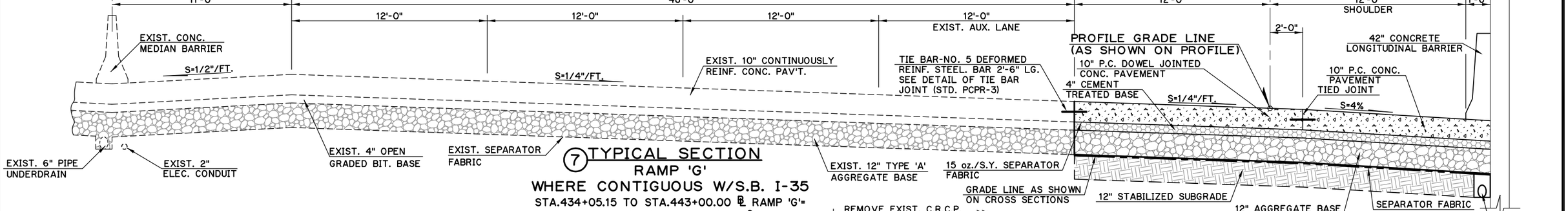

⑦ TYPICAL SECTION
RAMP 'G'
WHERE CONTIGUOUS W/S.B. I-35
STA.434+05.15 TO STA.443+00.00 ℄ RAMP 'G'=
STA.67+03.48 TO STA.58+08.63 ℄ I-35

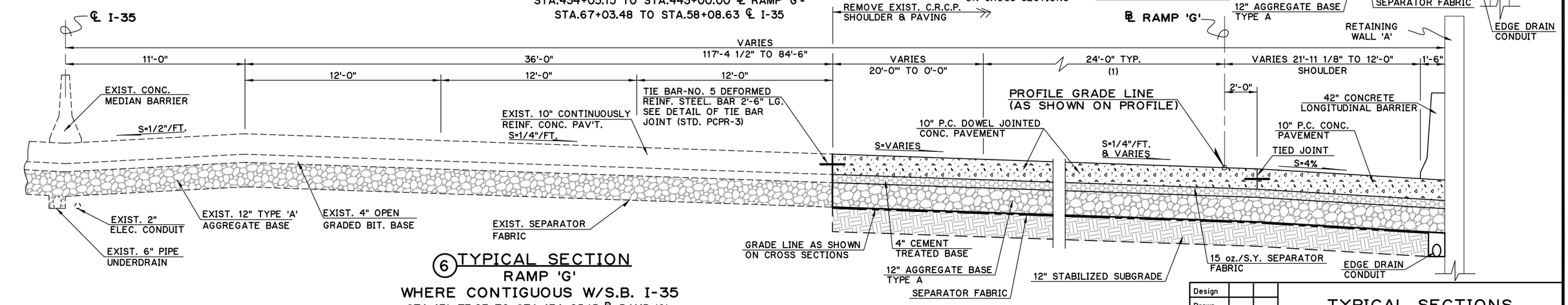

⑥ TYPICAL SECTION
RAMP 'G'
WHERE CONTIGUOUS W/S.B. I-35
STA.431+73.03 TO STA.434+05.15 ℄ RAMP 'G'=
STA.69+39.64 TO STA.67+03.48 ℄ I-35

(1) VARIES 28'-0" TO 24'-0" STA.431+73.03 TO STA.432+55.21

Design		
Drawn		
Checked		
Approved		
Squad	POE	

TYPICAL SECTIONS RAMP 'G'

State Job No. 09032(17) Sheet No. 11

SEPT 08, 2016 - 08:09:37
H:\PROJECTS\2789_CrossRoads_InterX_New\PHASE IA\Roadway\Drawings\2789-PHASE 1A_TYPSECTIONS-RAMPS.DWG

REVISIONS	
DESCRIPTION	DATE

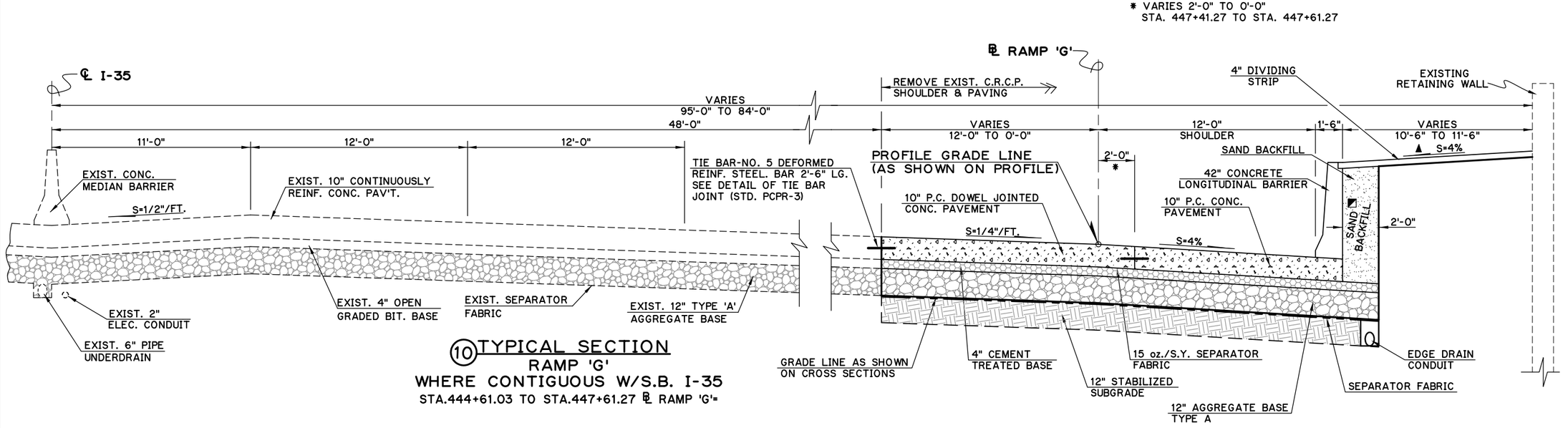

(10) TYPICAL SECTION
RAMP 'G'
WHERE CONTIGUOUS W/S.B. I-35
STA.444+61.03 TO STA.447+61.27 ℄ RAMP 'G'=

▲ SLOPE VARIES STA. 443+00.00 TO STA. 444+89.75
SLOPES 1:3 AND STEEPER WILL BE SLOPEWALL

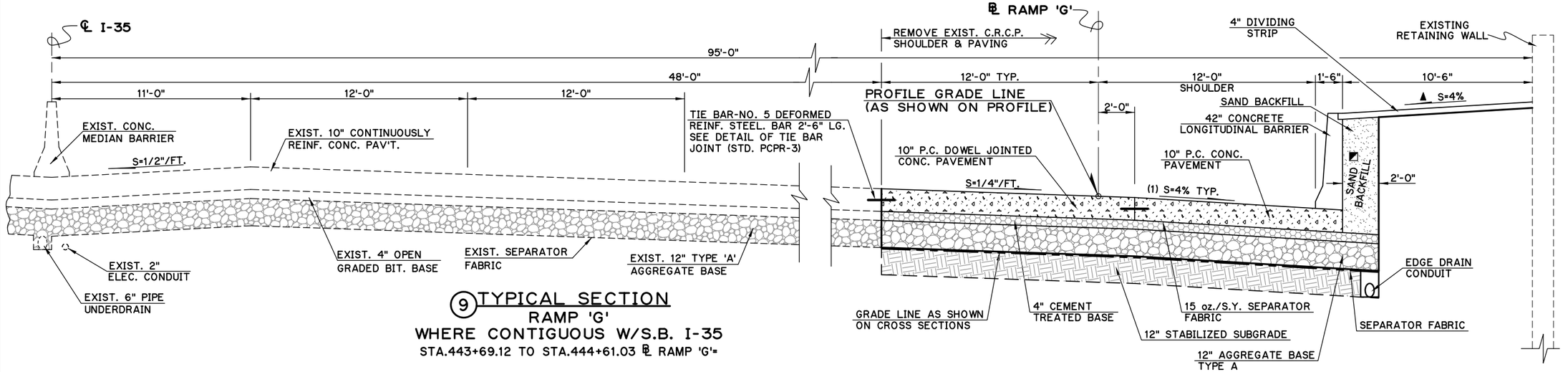

(9) TYPICAL SECTION
RAMP 'G'
WHERE CONTIGUOUS W/S.B. I-35
STA.443+69.12 TO STA.444+61.03 ℄ RAMP 'G'=

(1) SHOULDER SLOPE VARIES STA. 445+25.00 TO STA. 446+42.96

◩ COST TO BE INCLUDED IN PRICE BID FOR OTHER ITEMS OF WORK

Design		
Drawn		
Checked		
Approved		
Squad	POE	

TYPICAL SECTIONS
RAMP 'G'

State Job No. 09032(17) Sheet No. 12

SEPT 08, 2016 - 08:09:37
H:\PROJECTS\2789_CrossRoads_InterX_New\PHASE IA\Roadway\Drawings\2789-PHASE 1A_TYPSECTIONS-RAMPS.DWG

REVISIONS	
DESCRIPTION	DATE

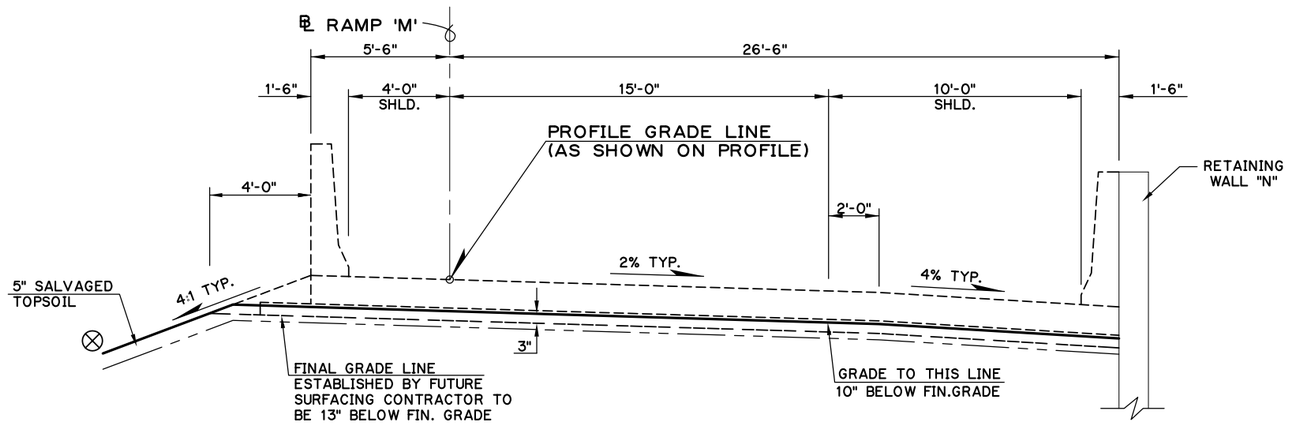

② TYPICAL SECTION RAMP 'M'

STA.426+70.07 TO STA.427+00.00 ■
(GRADING ONLY)

■ THE SOILS IN THE TOP 24 INCHES OF THIS GRADING SECTION SHALL BE RESTRICTED TO A-3, A-2-4, A-4, OR A-6 SOILS AS CLASSIFIED ACCORDING TO AASHTO M-145. THESE SOILS SHALL BE FURTHER RESTRICTED TO A MAXIMUM PLASTICITY INDEX OF 18.

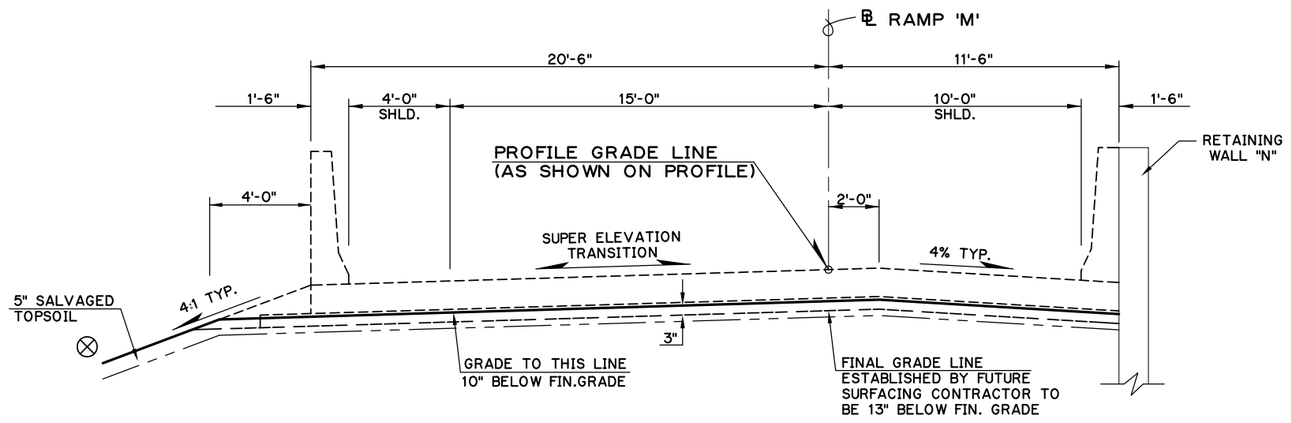

① TYPICAL SECTION RAMP 'M'

STA.425+97.33 TO STA.426+70.07 ■
(GRADING ONLY)

TOPSOIL NOTE:
THE CONTRACTOR SHALL STRIP ALL OF THE AVAILABLE TOPSOIL, STOCKPILE IT, AND PLACE IT BACK ON THE SECTION IN ACCORDANCE WITH SECTION 205 OF THE STANDARD SPECIFICATIONS. RESERVED TOPSOIL SHALL BE SPREAD FIRST ON THE COMPLETED SLOPES OF THE CUT SECTIONS AND THE REMAINDER ON COMPLETED FILL SLOPES OR OTHER PRIORITY AREAS LOCATED BY THE ENGINEER. ALL ADDITIONAL COSTS ASSOCIATED WITH OPERATION SHALL BE INCLUDED IN THE PAY ITEM FOR SALVAGED TOPSOIL, LUMP SUM.

THE GRADING LINE AS SHOWN ON THE TYPICAL AND CROSS SECTIONS IS TO THE TOP OF THE TOPSOIL. EARTHWORK QUANTITIES WERE NOT ADJUSTED FOR SALVAGE.

⊗ INTERSECTION OF CUT AND/OR FILL SLOPES WITH GROUND LINE TO BE ROUNDED AS PART OF FINISHING OPERATIONS. ROUNDING SHALL BE 5' MIN. FOR SMALLER CUTS AND FILLS, TO 15' MAX. FOR LARGER CUTS AND FILLS, OR AS DESIGNATED BY THE ENGINEER. COST OF ROUNDING TO BE INCLUDED IN PRICE BID FOR OTHER ITEMS OF WORK. SEE ROUNDING DETAIL SHEET 3A.

Design		
Drawn		
Checked		
Approved		
Squad	POE	

TYPICAL SECTIONS RAMP 'M'

State Job No. 09032(17) Sheet No. 13

SEPT 08, 2016 - 08:09:37
H:\PROJECTS\2789_CrossRoads_InterX_New\PHASE IA\Roadway\Drawings\2789-PHASE 1A_TYPSECTIONS-RAMPS.DWG

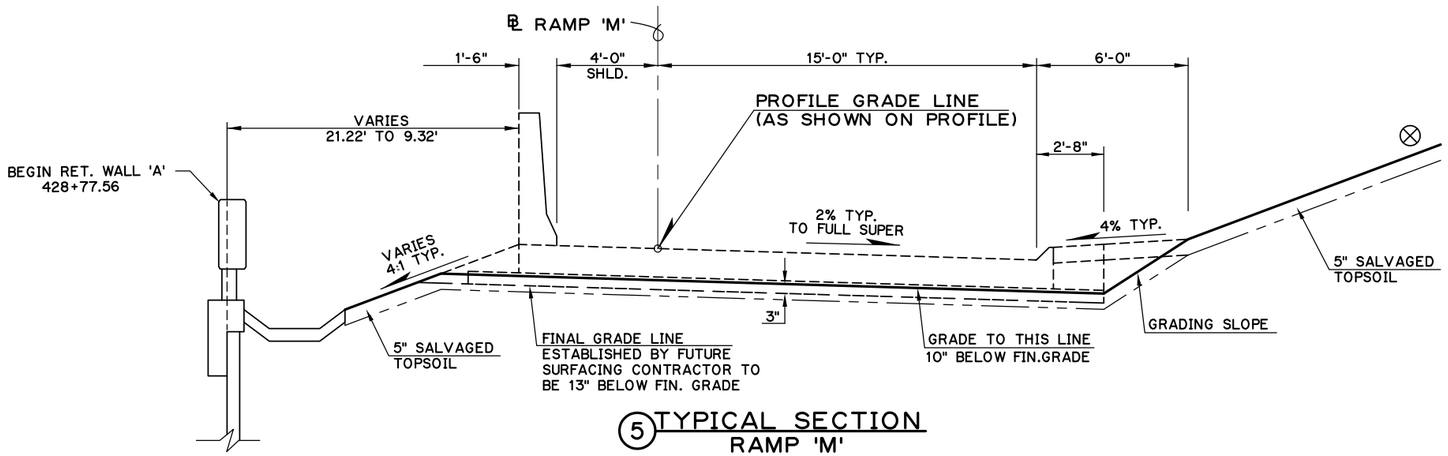

⑤ TYPICAL SECTION RAMP 'M'

STA.428+77.56 TO STA.430+00.00 ■
(GRADING ONLY)

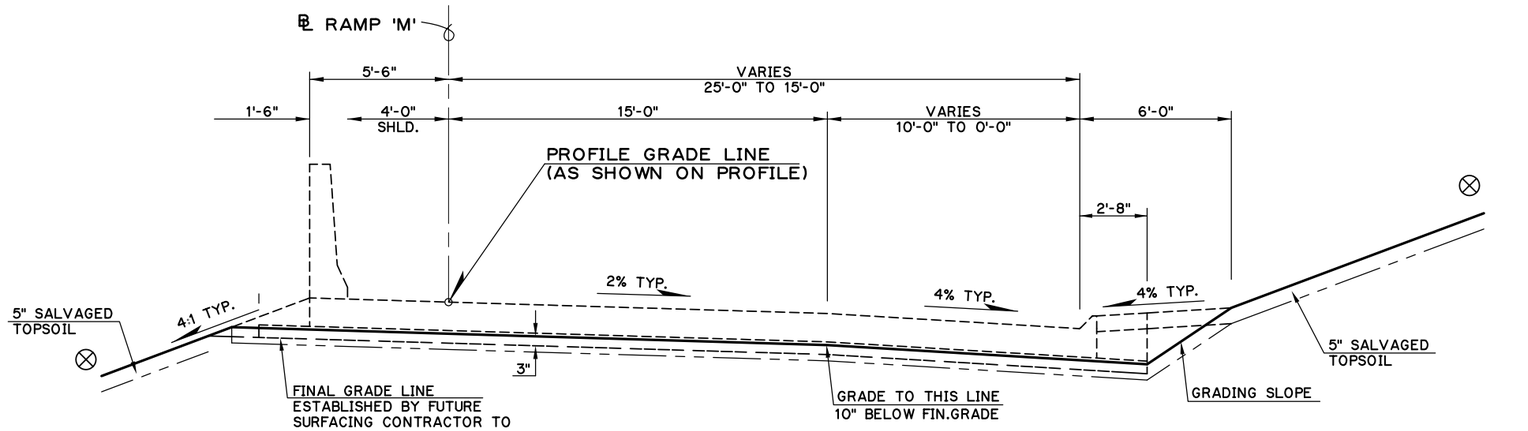

④ TYPICAL SECTION RAMP 'M'

STA.428+16.98 TO STA.428+77.56 ■
(GRADING ONLY)

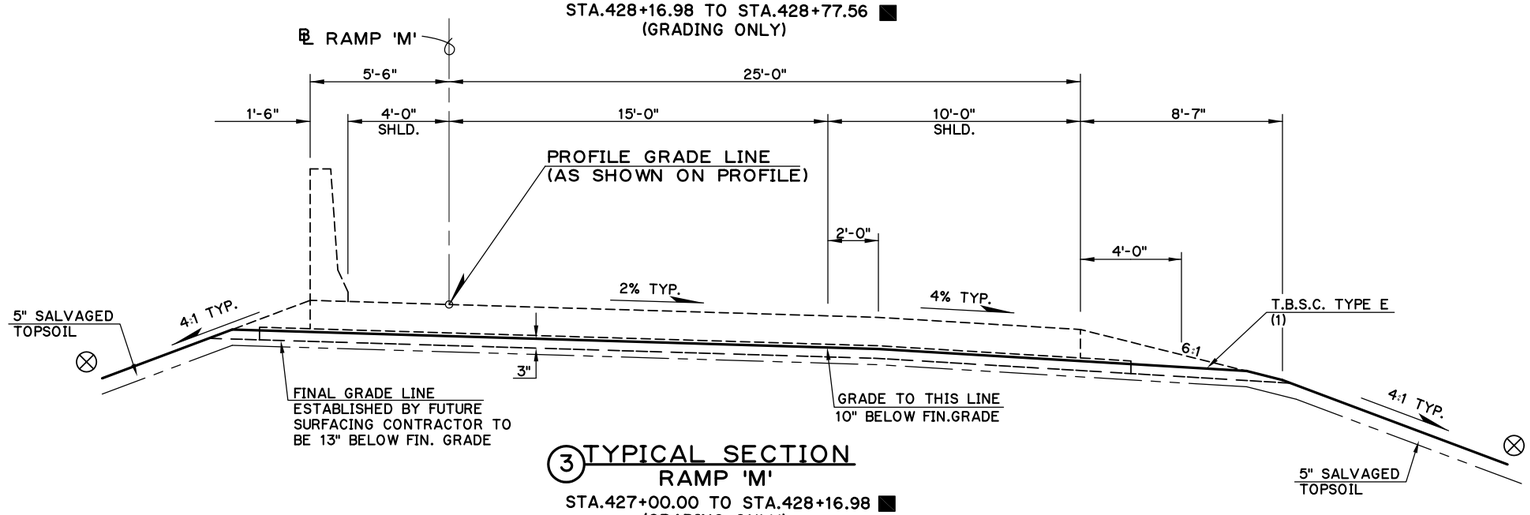

③ TYPICAL SECTION RAMP 'M'

STA.427+00.00 TO STA.428+16.98 ■
(GRADING ONLY)

■ THE SOILS IN THE TOP 24 INCHES OF THIS GRADING SECTION SHALL BE RESTRICTED TO A-3, A-2-4, A-4, OR A-6 SOILS AS CLASSIFIED ACCORDING TO AASHTO M-145. THESE SOILS SHALL BE FURTHER RESTRICTED TO A MAXIMUM PLASTICITY INDEX OF 18.

TOPSOIL NOTE:
THE CONTRACTOR SHALL STRIP ALL OF THE AVAILABLE TOPSOIL, STOCKPILE IT, AND PLACE IT BACK ON THE SECTION IN ACCORDANCE WITH SECTION 205 OF THE STANDARD SPECIFICATIONS. RESERVED TOPSOIL SHALL BE SPREAD FIRST ON THE COMPLETED SLOPES OF THE CUT SECTIONS AND THE REMAINDER ON COMPLETED FILL SLOPES OR OTHER PRIORITY AREAS LOCATED BY THE ENGINEER. ALL ADDITIONAL COSTS ASSOCIATED WITH OPERATION SHALL BE INCLUDED IN THE PAY ITEM FOR SALVAGED TOPSOIL, LUMP SUM.

THE GRADING LINE AS SHOWN ON THE TYPICAL AND CROSS SECTIONS IS TO THE TOP OF THE TOPSOIL. EARTHWORK QUANTITIES WERE NOT ADJUSTED FOR SALVAGE.

⊗ INTERSECTION OF CUT AND/OR FILL SLOPES WITH GROUND LINE TO BE ROUNDED AS PART OF FINISHING OPERATIONS. ROUNDING SHALL BE 5' MIN. FOR SMALLER CUTS AND FILLS, TO 15' MAX. FOR LARGER CUTS AND FILLS, OR AS DESIGNATED BY THE ENGINEER. COST OF ROUNDING TO BE INCLUDED IN PRICE BID FOR OTHER ITEMS OF WORK. SEE ROUNDING DETAIL SHEET 3A.

REVISIONS

DESCRIPTION	DATE

Design		
Drawn		
Checked		
Approved		
Squad	POE	

TYPICAL SECTIONS RAMP 'M'

State Job No. 09032(17) Sheet No. 14

SEPT 08, 2016 - 08:09:37
H:\PROJECTS\2789_CrossRoads_InterX_New\PHASE IA\Roadway\Drawings\2789-PHASE 1A_TYPSECTIONS-RAMPS.DWG

REVISIONS	
DESCRIPTION	DATE

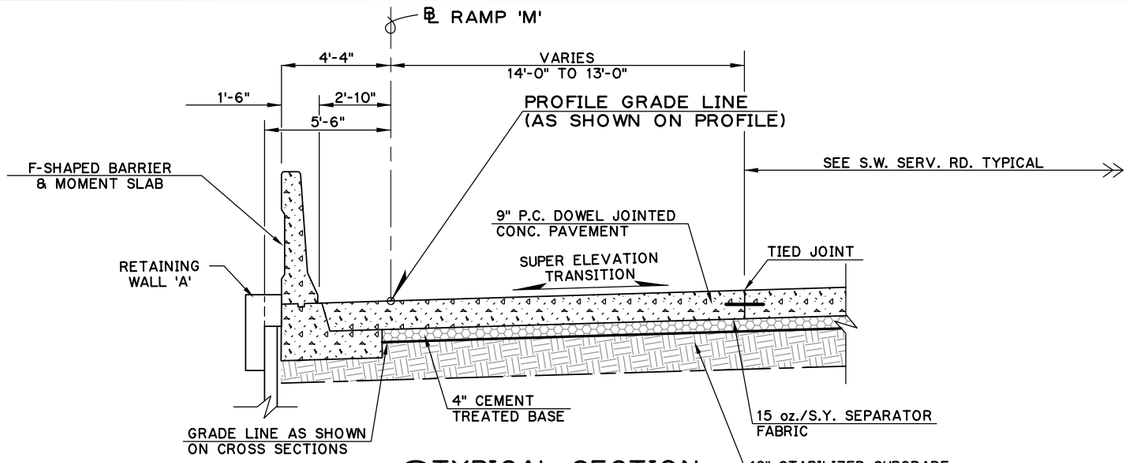

⑥ TYPICAL SECTION
RAMP 'M'
STA.432+79.57 TO STA.435+39.70

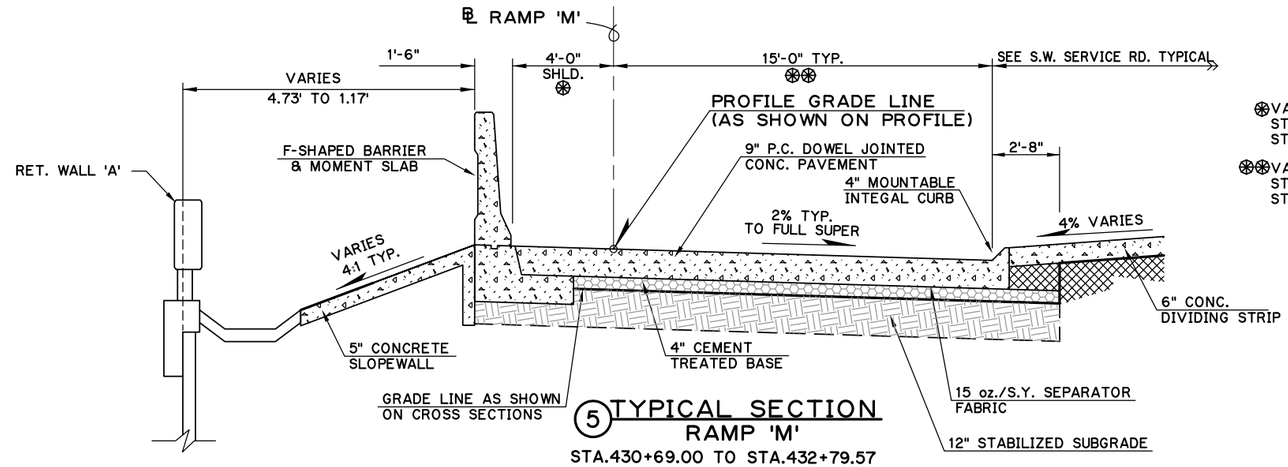

⑤ TYPICAL SECTION
RAMP 'M'
STA.430+69.00 TO STA.432+79.57

⊛ VARIES 4'-0" TO 2'-10"
STA.431+55.04 TO
STA.432+39.88

⊛⊛ VARIES 15'-0" TO 14'-0"
STA.431+88.84 TO
STA.432+39.88

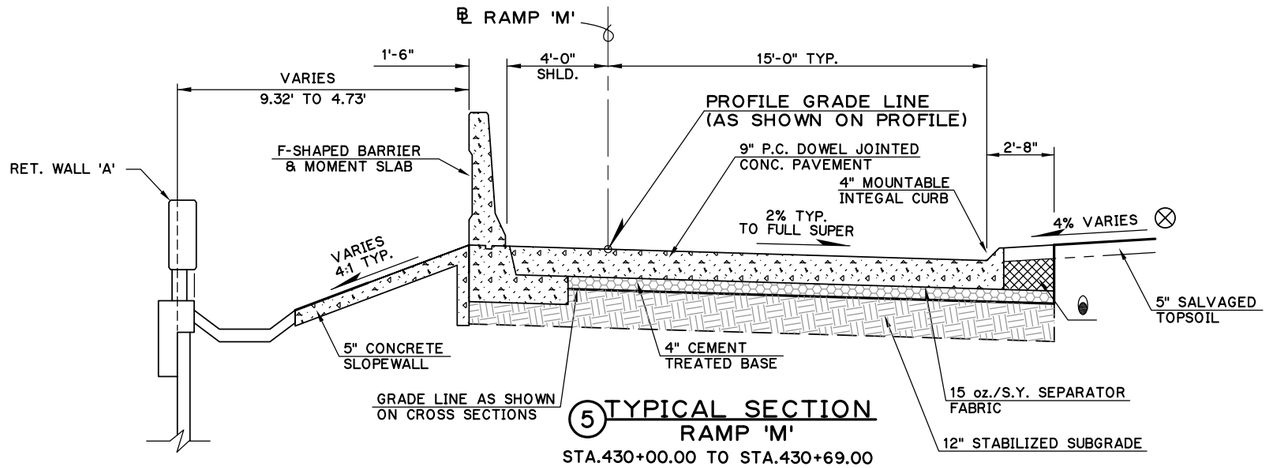

⑤ TYPICAL SECTION
RAMP 'M'
STA.430+00.00 TO STA.430+69.00
(BEGIN PAVING)

(1) BACKFILL NOTE:
THIS AREA TO BE BACKFILLED AND COMPACTED USING TRAFFIC BOUND SURFACE COURSE, TYPE E.

TOPSOIL NOTE:
THE CONTRACTOR SHALL STRIP ALL OF THE AVAILABLE TOPSOIL, STOCKPILE IT, AND PLACE IT BACK ON THE SECTION IN ACCORDANCE WITH SECTION 205 OF THE STANDARD SPECIFICATIONS. RESERVED TOPSOIL SHALL BE SPREAD FIRST ON THE COMPLETED SLOPES OF THE CUT SECTIONS AND THE REMAINDER ON COMPLETED FILL SLOPES OR OTHER PRIORITY AREAS LOCATED BY THE ENGINEER. ALL ADDITIONAL COSTS ASSOCIATED WITH OPERATION SHALL BE INCLUDED IN THE PAY ITEM FOR SALVAGED TOPSOIL, LUMP SUM.

THE GRADING LINE AS SHOWN ON THE TYPICAL AND CROSS SECTIONS IS TO THE TOP OF THE TOPSOIL. EARTHWORK QUANTITIES WERE NOT ADJUSTED FOR SALVAGE.

⊗ INTERSECTION OF CUT AND/OR FILL SLOPES WITH GROUND LINE TO BE ROUNDED AS PART OF FINISHING OPERATIONS. ROUNDING SHALL BE 5' MIN. FOR SMALLER CUTS AND FILLS, TO 15' MAX. FOR LARGER CUTS AND FILLS, OR AS DESIGNATED BY THE ENGINEER. COST OF ROUNDING TO BE INCLUDED IN PRICE BID FOR OTHER ITEMS OF WORK. SEE ROUNDING DETAIL SHEET 3A.

◉ TO BE BACKFILLED AND COMPACTED AS PART OF FINISHING OPERATIONS. COST TO BE INCLUDED IN PRICE BID FOR OTHER ITEMS OF WORK.

■ THE SOILS IN THE TOP 24 INCHES OF THIS GRADING SECTION SHALL BE RESTRICTED TO A-3, A-2-4, A-4, OR A-6 SOILS AS CLASSIFIED ACCORDING TO AASHTO M-145. THESE SOILS SHALL BE FURTHER RESTRICTED TO A MAXIMUM PLASTICITY INDEX OF 18.

Design		
Drawn		
Checked		
Approved		
Squad	POE	

TYPICAL SECTIONS
RAMP 'M'

State Job No. 09032(17) Sheet No. 15

SEPT 08, 2016 - 08:09:37
H:\PROJECTS\2789_CrossRoads_InterX_New\PHASE IA\Roadway\Drawings\2789-PHASE 1A_TYPSECTIONS-RAMPS.DWG

REVISIONS	
DESCRIPTION	DATE

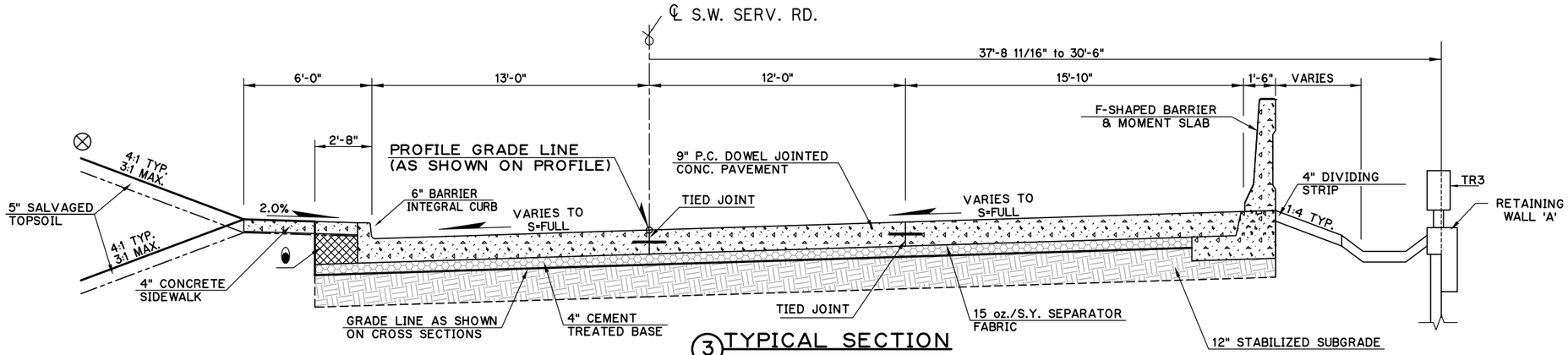

③ TYPICAL SECTION
S.W. SERVICE ROAD
STA.59+54.73 TO STA.61+57.54

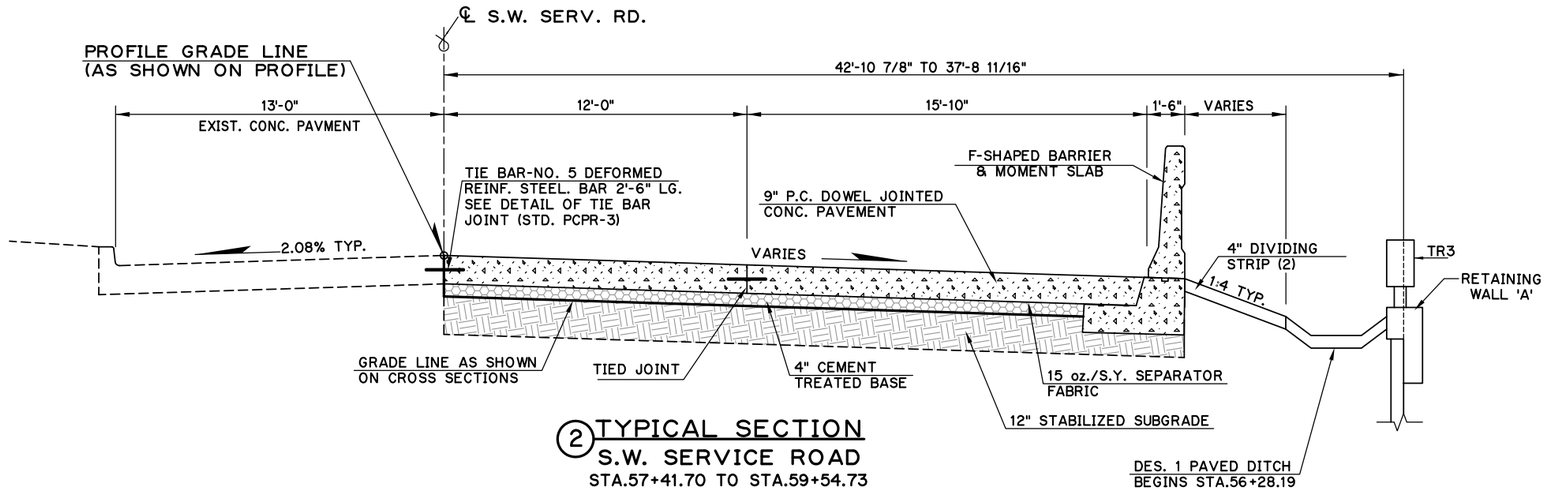

② TYPICAL SECTION
S.W. SERVICE ROAD
STA.57+41.70 TO STA.59+54.73

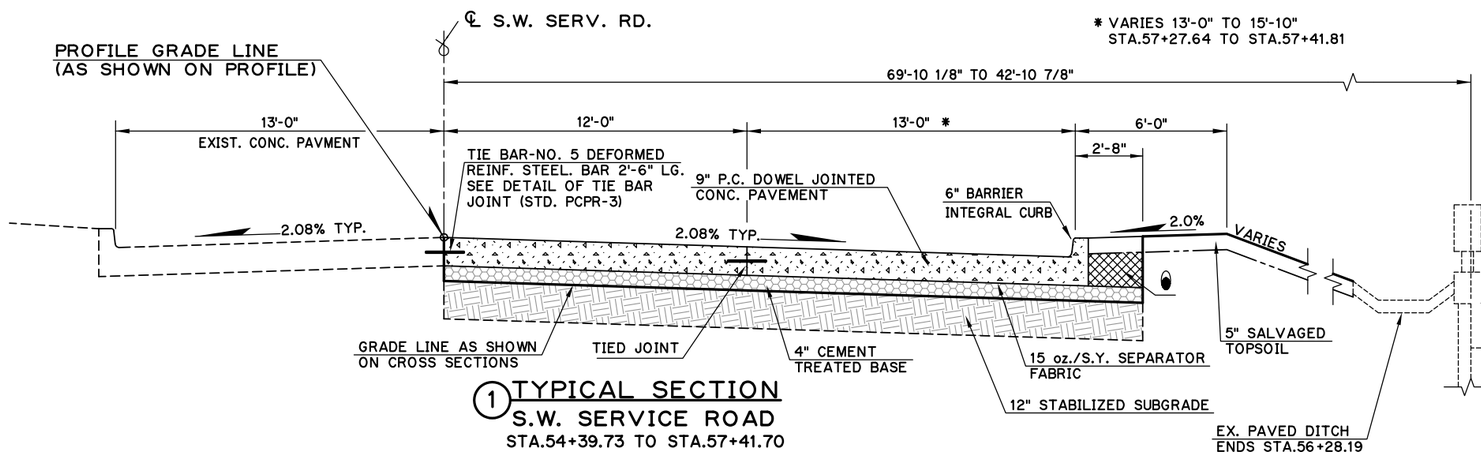

① TYPICAL SECTION
S.W. SERVICE ROAD
STA.54+39.73 TO STA.57+41.70

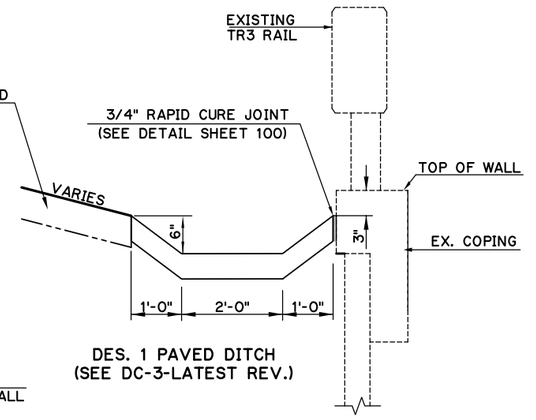

DES. 1 PAVED DITCH
(SEE DC-3-LATEST REV.)

(1) BACKFILL NOTE:
THIS AREA TO BE BACKFILLED AND COMPACTED USING TRAFFIC BOUND SURFACE COURSE, TYPE E.

(2) DIVIDING STRIP BEINGS AT STA. 57+27.64

TOPSOIL NOTE:
THE CONTRACTOR SHALL STRIP ALL OF THE AVAILABLE TOPSOIL, STOCKPILE IT, AND PLACE IT BACK ON THE SECTION IN ACCORDANCE WITH SECTION 205 OF THE STANDARD SPECIFICATIONS. RESERVED TOPSOIL SHALL BE SPREAD FIRST ON THE COMPLETED SLOPES OF THE CUT SECTIONS AND THE REMAINDER ON COMPLETED FILL SLOPES OR OTHER PRIORITY AREAS LOCATED BY THE ENGINEER. ALL ADDITIONAL COSTS ASSOCIATED WITH OPERATION SHALL BE INCLUDED IN THE PAY ITEM FOR SALVAGED TOPSOIL, LUMP SUM.

THE GRADING LINE AS SHOWN ON THE TYPICAL AND CROSS SECTIONS IS TO THE TOP OF THE TOPSOIL. EARTHWORK QUANTITIES WERE NOT ADJUSTED FOR SALVAGE.

⊗ INTERSECTION OF CUT AND/OR FILL SLOPES WITH GROUND LINE TO BE ROUNDED AS PART OF FINISHING OPERATIONS. ROUNDING SHALL BE 5' MIN. FOR SMALLER CUTS AND FILLS. TO 15' MAX. FOR LARGER CUTS AND FILLS, OR AS DESIGNATED BY THE ENGINEER. COST OF ROUNDING TO BE INCLUDED IN PRICE BID FOR OTHER ITEMS OF WORK. SEE ROUNDING DETAIL SHEET 3A.

● TO BE BACKFILLED AND COMPACTED AS PART OF FINISHING OPERATIONS. COST TO BE INCLUDED IN PRICE BID FOR OTHER ITEMS OF WORK.

Design		
Drawn		
Checked		
Approved		
Squad	POE	

TYPICAL SECTIONS
S.W. SERVICE ROAD

State Job No. 09032(17) Sheet No. 16

SEPT 08, 2016 - 15:26:03
H:\PROJECTS\2789_CrossRoads_InterX_New\PHASE 1A\Roadway\Drawings\2789-PHASE 1A_TYPSECTIONS-SERVRDS.DWG

REVISIONS	
DESCRIPTION	DATE

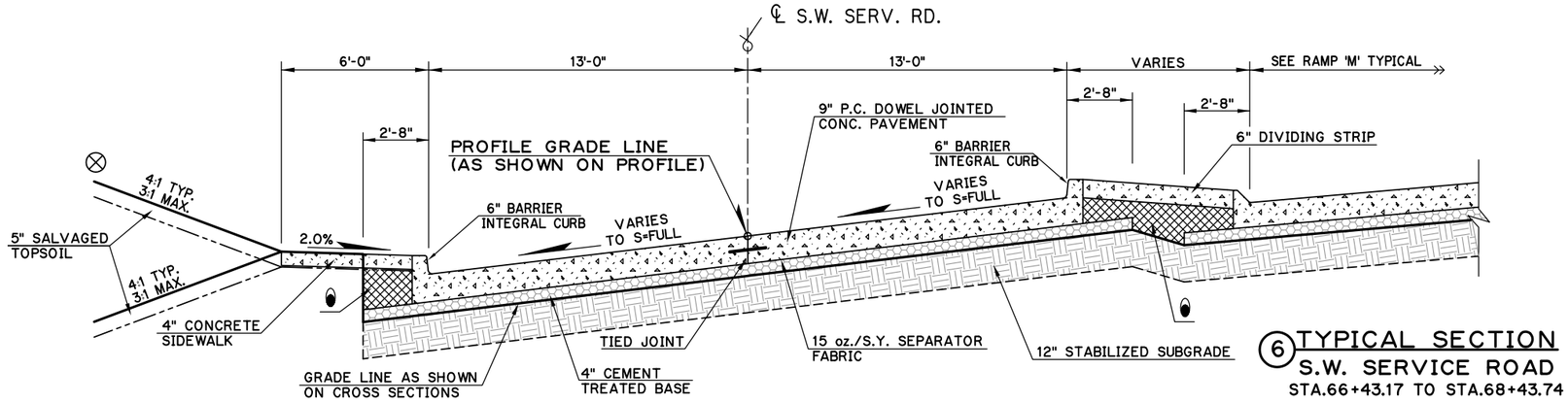

⑥ TYPICAL SECTION
S.W. SERVICE ROAD
STA.66+43.17 TO STA.68+43.74

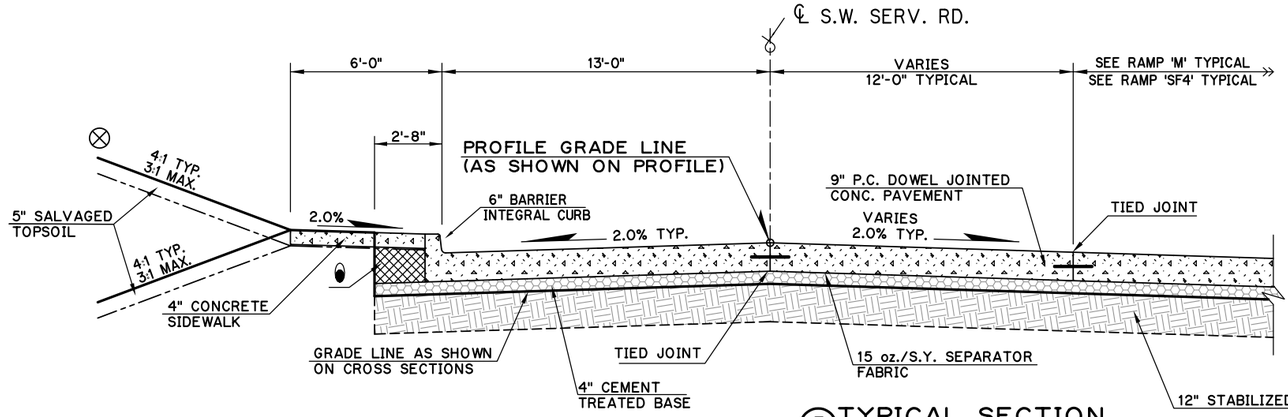

⑤ TYPICAL SECTION
S.W. SERVICE ROAD
STA.63+83.28 TO STA.66+43.17

TOPSOIL NOTE:
THE CONTRACTOR SHALL STRIP ALL OF THE AVAILABLE TOPSOIL, STOCKPILE IT, AND PLACE IT BACK ON THE SECTION IN ACCORDANCE WITH SECTION 205 OF THE STANDARD SPECIFICATIONS. RESERVED TOPSOIL SHALL BE SPREAD FIRST ON THE COMPLETED SLOPES OF THE CUT SECTIONS AND THE REMAINDER ON COMPLETED FILL SLOPES OR OTHER PRIORITY AREAS LOCATED BY THE ENGINEER. ALL ADDITIONAL COSTS ASSOCIATED WITH OPERATION SHALL BE INCLUDED IN THE PAY ITEM FOR SALVAGED TOPSOIL, LUMP SUM.

THE GRADING LINE AS SHOWN ON THE TYPICAL AND CROSS SECTIONS IS TO THE TOP OF THE TOPSOIL. EARTHWORK QUANTITIES WERE NOT ADJUSTED FOR SALVAGE.

⊗ INTERSECTION OF CUT AND/OR FILL SLOPES WITH GROUND LINE TO BE ROUNDED AS PART OF FINISHING OPERATIONS. ROUNDING SHALL BE 5' MIN. FOR SMALLER CUTS AND FILLS, TO 15' MAX. FOR LARGER CUTS AND FILLS, OR AS DESIGNATED BY THE ENGINEER. COST OF ROUNDING TO BE INCLUDED IN PRICE BID FOR OTHER ITEMS OF WORK. SEE ROUNDING DETAIL SHEET 3A.

● TO BE BACKFILLED AND COMPACTED AS PART OF FINISHING OPERATIONS. COST TO BE INCLUDED IN PRICE BID FOR OTHER ITEMS OF WORK.

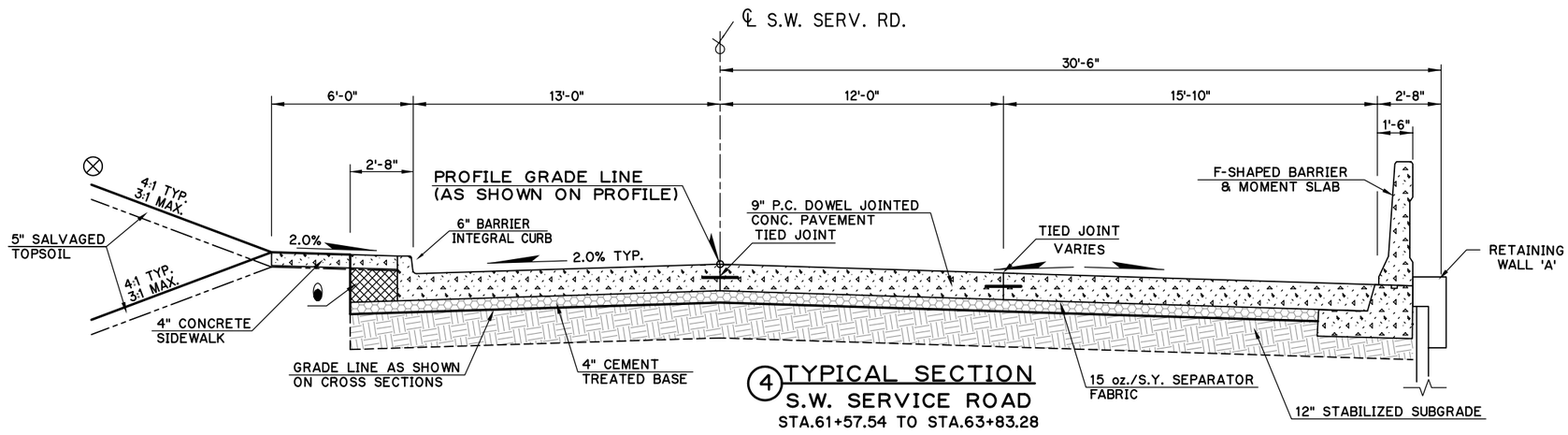

④ TYPICAL SECTION
S.W. SERVICE ROAD
STA.61+57.54 TO STA.63+83.28

Design		
Drawn		
Checked		
Approved		
Squad	POE	

TYPICAL SECTIONS
S.W. SERVICE ROAD

State Job No. 09032(17) Sheet No. 17

SEPT 08, 2016 - 15:26:03
H:\PROJECTS\2789_CrossRoads_InterX_New\PHASE IA\Roadway\Drawings\2789-PHASE 1A_TYPSECTIONS-SERVRDS.DWG

REVISIONS	
DESCRIPTION	DATE

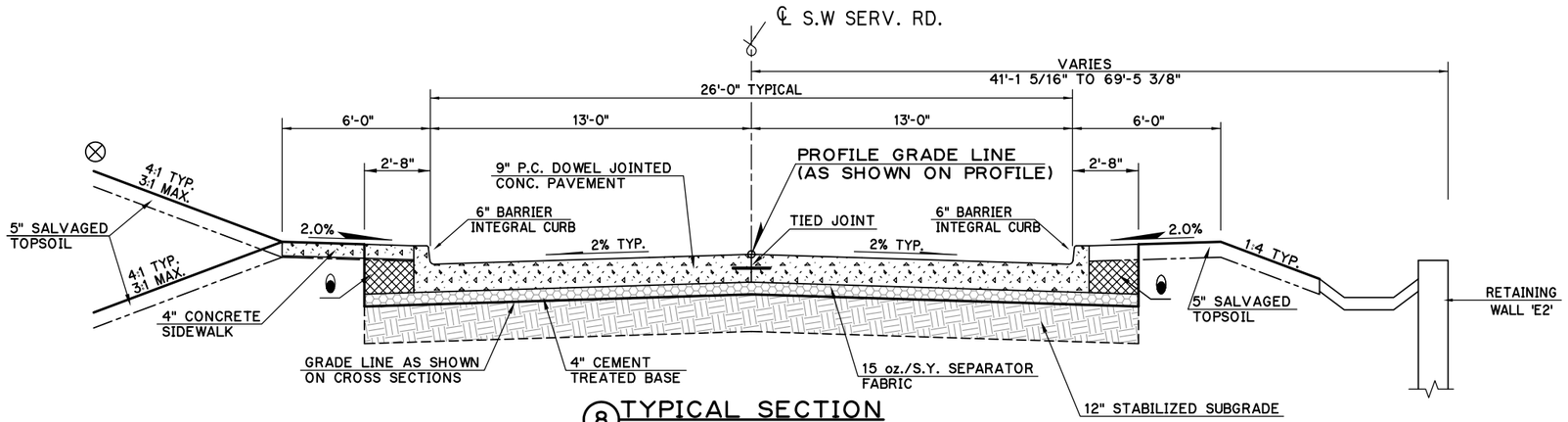

⑧ TYPICAL SECTION
S.W. SERVICE ROAD
STA.96+19.57 TO STA.105+22.20

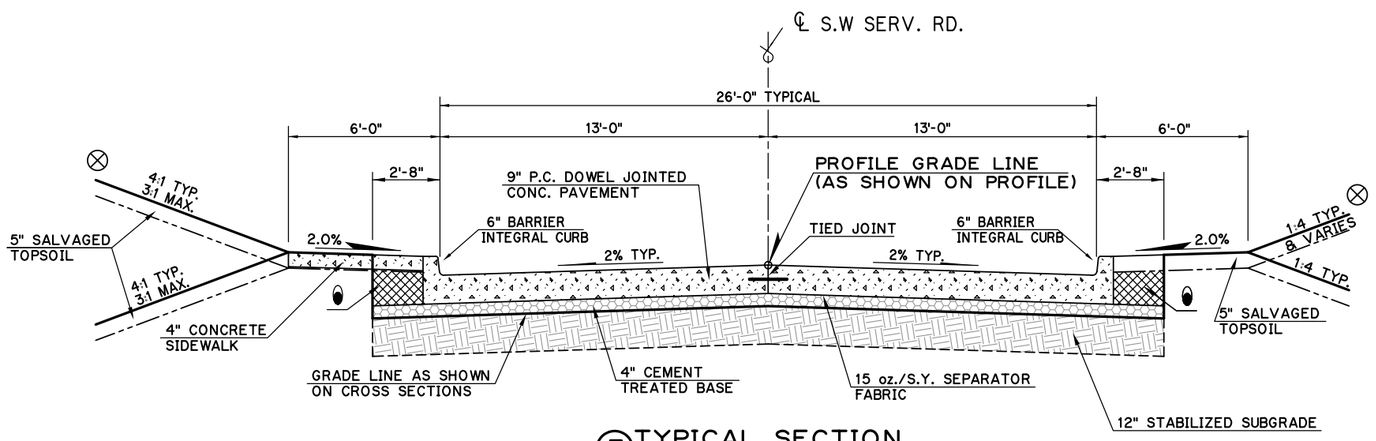

⑦ TYPICAL SECTION
S.W. SERVICE ROAD
STA.68+43+74 TO STA.96+19.57

TOPSOIL NOTE:
THE CONTRACTOR SHALL STRIP ALL OF THE AVAILABLE TOPSOIL, STOCKPILE IT, AND PLACE IT BACK ON THE SECTION IN ACCORDANCE WITH SECTION 205 OF THE STANDARD SPECIFICATIONS. RESERVED TOPSOIL SHALL BE SPREAD FIRST ON THE COMPLETED SLOPES OF THE CUT SECTIONS AND THE REMAINDER ON COMPLETED FILL SLOPES OR OTHER PRIORITY AREAS LOCATED BY THE ENGINEER. ALL ADDITIONAL COSTS ASSOCIATED WITH OPERATION SHALL BE INCLUDED IN THE PAY ITEM FOR SALVAGED TOPSOIL, LUMP SUM.

THE GRADING LINE AS SHOWN ON THE TYPICAL AND CROSS SECTIONS IS TO THE TOP OF THE TOPSOIL. EARTHWORK QUANTITIES WERE NOT ADJUSTED FOR SALVAGE.

⊗ INTERSECTION OF CUT AND/OR FILL SLOPES WITH GROUND LINE TO BE ROUNDED AS PART OF FINISHING OPERATIONS. ROUNDING SHALL BE 5' MIN. FOR SMALLER CUTS AND FILLS, TO 15' MAX. FOR LARGER CUTS AND FILLS, OR AS DESIGNATED BY THE ENGINEER. COST OF ROUNDING TO BE INCLUDED IN PRICE BID FOR OTHER ITEMS OF WORK. SEE ROUNDING DETAIL SHEET 3A.

TO BE BACKFILLED AND COMPACTED AS PART OF FINISHING OPERATIONS. COST TO BE INCLUDED IN PRICE BID FOR OTHER ITEMS OF WORK.

Design		
Drawn		
Checked		
Approved		
Squad	POE	

TYPICAL SECTIONS
S.W. SERVICE ROAD

State Job No. 09032(17) Sheet No. 18

SEPT 08, 2016 - 15:26:03
H:\PROJECTS\2789_CrossRoads_InterX_New\PHASE IA\Roadway\Drawings\2789-PHASE 1A_TYPSECTIONS-SERVRDS.DWG

REVISIONS	
DESCRIPTION	DATE

MATCHLINE STA. 94+00

MATCHLINE STA. 390+00

MATCHLINE STA. 445+00

℄ SHIELDS BLVD.

℄ I-240

℄ N.W. SERVICE RD.

℄ S.W. SERV. RD.

℄ N.N.E. SERV. RD.

℄ E.N.E. SERV. RD.

℄ S.E. SERV. RD.

℄ I-35

℄ RAMP 'A'

℄ RAMP 'B'

℄ RAMP 'C'

℄ RAMP 'D'

℄ RAMP 'E'

℄ RAMP 'F'

℄ RAMP 'G'

℄ RAMP 'H'

℄ RAMP 'I'

℄ RAMP 'J'

℄ RAMP 'M'

℄ RAMP 'SF 3'

℄ RAMP 'SF 4'

200' 0 200' 400'

Horizontal Scale in Feet

Design		
Drawn		
Checked		
Approved		
Squad	POE	

INTERCHANGE GEOMETRIC LAYOUT SHEET

State Job No. 09032(17) Sheet No. 19

SEPT 08, 2016 - 09:54:34
H:\PROJECTS\2789_CrossRoads_InterX_New\PHASE IA\Roadway\Drawings\2789-PHASE 1A GEOLAYA.DWG

POINT COORDINATE TABLE

I-240 (EASTBOUND & WESTBOUND) V = 60 mph e max = 0.08%

	PT.NO.	STATION AND LOCATION	X COORDINATE	Y COORDINATE	BEARING/CV. DATA
	6417	P.O.T. STA. 371+39.31	2,145,147.3663	143,039.5414	
	6416	P.O.T. STA. 376+33.72 = P.O.T. STA. 100+97.00 ℄ S. SANTA FE	2,145,641.7541	143,044.2284	N 89°27'24.62" E
	6001	P.O.T. STA. 393+43.79 = P.O.T. STA. 147+61.37 ℄ S. SHIELDS BLVD.	2,147,351.7473	143,060.4395	
CV. CV-1	6241	P.O.T. STA. 400+00.00 BK. = PC. CV. CV-1 STA. 399+96.14 AHD.	2,148,007.9278	143,066.6602	
CV. CV-1	6675	P.I. CV. CV-1 STA. 403+21.43	2,148,333.2057	143,069.7439	Δ = 06°29'55.94"RT. D = 01°00'00.00" L = 649.887' T = 325.293' R = 5729.5780'
CV. CV-1	16002	RAD. PT. CV. CV-1	2,148,062.2430	137,337.3397	
CV. CV-1	16005	P.T. CV. CV-1 STA. 406+46.03	2,148,656.7424	143,035.9917	
					S 84°02'39.43" E
CV. CV-2	16006	P.C. CV. CV-2 STA. 416+97.59	2,149,702.6326	142,926.8815	
CV. CV-2	6676	P.I. CV. CV-2 STA. 420+16.20	2,150,019.5179	142,893.8231	Δ = 06°21'55.96"LT. D = 01°00'00.00" L = 636.555' T = 318.605' R = 5729.5780'
CV. CV-2	1024	P.O.T. STA. 422+36.66 = P.O.T. STA. 419+30.06 ℄ RAMP "M"	2,150,240.6267	142,896.2341	
CV. CV-2	1010	P.O.C. STA. 422+85.90 = P.O.C. STA. 419+28.51 ℄ RAMP "B"	2,150,289.8655	142,895.9601	
CV. CV-2	16003	RAD. PT. CV. CV-2	2,150,297.1320	148,625.5335	
CV. CV-2	16001	P.T. CV. CV-2 STA. 423+34.15	2,150,338.1148	142,896.1020	
	18322	P.O.T. STA. 427+62.58 = P.O.T. STA. 85+49.78 ℄ RAMP "C"	2,150,766.5338	142,899.1665	
	6404	P.O.T. STA. 428+21.58 = P.O.T. STA. 78+80.37 ℄ I-35	2,150,825.5324	142,899.5886	
	1015	P.O.T. STA. 428+80.58 = P.O.T. STA. 78+80.28 ℄ RAMP "D"	2,150,884.5310	142,900.0106	
	1003	P.O.T. STA. 434+41.56 = P.O.T. STA. 79+77.81 ℄ RAMP "A"	2,151,445.4975	142,904.0232	N 89°35'24.61" E
	1020	P.O.T. STA. 434+74.79 = P.O.T. STA. 79+80.93 ℄ RAMP "J"	2,151,478.7251	142,904.2609	
	12076	P.O.T. STA. 450+36.27 = P.O.T. STA. 65+66.89 ℄ POLE RD.	2,153,040.1724	142,915.4300	
CV. CV-3	6105	P.C. CV. CV-3 STA. 463+07.99	2,154,311.8497	142,924.5263	
CV. CV-3	6242	P.I. CV. CV-3 STA. 468+91.34	2,154,895.1883	142,928.6990	Δ = 01°10'00.00"RT. D = 00°06'00.00" L = 1166.667' T = 583.35' R = 57295.7795'
CV. CV-3	6106	RADIUS PT. CV. CV-3	2,154,721.6783	85,630.2126	
CV. CV-3	6107	P.T. CV. CV-3 STA. 474+74.65	2,155,478.4909	142,920.9935	

I-35 (NORTHBOUND & SOUTHBOUND) V = 60 mph e max = 0.08%

1342	P.O.T. STA. 50+00.00	2,150,850.7429	140,019.3252	
1012	P.O.T. STA. 73+62.41 = P.O.C. STA. 427+00.74 ℄ RAMP "B".	2,150,830.0658	142,381.6492	N 00°30'05.4" W
6404	P.O.T. STA. 78+80.37 = P.O.T. STA. 428+21.58 ℄ I-240	2,150,825.5324	142,899.5886	
1084	P.I. STA. 79+79.43 Δ= 00°09'26.1" RT.	2,150,824.6653	142,998.6493	
1008	P.O.T. STA. 85+29.74 = P.O.C. STA. 89+27.71 ℄ RAMP "A"	2,150,821.3588	143,548.9515	N 00°20'29.3" W
2648	P.O.T. STA. 109+00.00	2,150,807.1173	145,919.1666	

RAMP "A" (N.B. I-35 TO W.B. I-240) V = 45 mph e max = 0.06%

18007	P.O.T. STA. 55+00.00 BEG. ℄ = 59' RT. P.O.T. STA. 55+00.00 ℄ I-35	2,150,905.3645	140,519.8265	N 03°16'40.93" E
CV. A-1	18008	P.C. CV. A-1 STA.60+75.69	2,150,938.2830	141,094.5720	
CV. A-1	18024	RAD. PT. CV. A-1	2,152,845.0174	140,985.3637	Δ = 13°43'49.22"RT. D = 03°00'00.00" L = 457.678' T = 229.94' R = 1909.8593'
CV. A-1	16626	P.I. CV. A-1 STA. 63+05.63	2,150,951.4313	141,324.1362	
CV. A-1	18031	P.T. CV. A-1 STA. 65+33.37 = SHIFT ℄ 24'LT.	2,151,018.6915	141,544.0195	
CV. A-2	18444	P.C. CV. A-2 STA. 65+27.90	2,150,995.7413	141,551.0398	Δ = 08°49'10.81"RT. D = 02°57'45.97" L = 297.683' T = 149.14' R = 1933.8593'
CV. A-2	16627	P.I. CV. A-2 STA. 66+77.04	2,151,039.3653	141,693.6531	
CV. A-2	18024	RAD. PT. CV. A-2	2,152,845.0174	140,985.3637	
CV. A-2	18025	P.T. CV. A-2 STA. 68+25.59	2,151,104.3398	141,827.8915	
					N 25°49'40.95" E
CV. A-3	18026	P.C. CV. A-3 STA. 74+54.34	2,151,378.2709	142,393.8382	
CV. A-3	1002	P.O.C. STA. 74+54.86 = P.O.C. STA. 432+59.34 ℄ RAMP "B"	2,151,378.4977	142,394.3072	
CV. A-3	1003	P.O.C. STA. 79+77.81 = P.O.T. STA. 434+41.56 ℄ I-240	2,151,445.4975	142,904.0232	
CV. A-3	1004	P.O.C. STA. 80+86.20 = P.O.T. STA. 434+15.00 ℄ RAMP "I"	2,151,418.1807	143,008.8305	
CV. A-3	1005	P.O.C. STA. 82+23.28 = P.O.T. STA. 433+38.43 ℄ RAMP "H"	2,151,364.2446	143,134.6747	Δ = 142°55'22.69"RT. D = 07°00'00.00" L = 2041.757' T = 2440.82' R = 818.5111'
CV. A-3	16629	P.I. CV. A-3 STA. 98+95.16	2,152,441.6662	144,590.8321	
CV. A-3	8040	RAD. PT. CV. A-3	2,150,641.5245	142,750.4404	
CV. A-3	1006	P.O.C. STA. 87+26.09 = P.O.T. STA. 428+37.77 ℄ RAMP "H"	2,151,010.6453	143,480.9951	
CV. A-3	1007	P.O.C. STA. 88+70.07 = P.O.T. STA. 85+14.69 ℄ RAMP "D"	2,150,877.0994	143,534.3185	

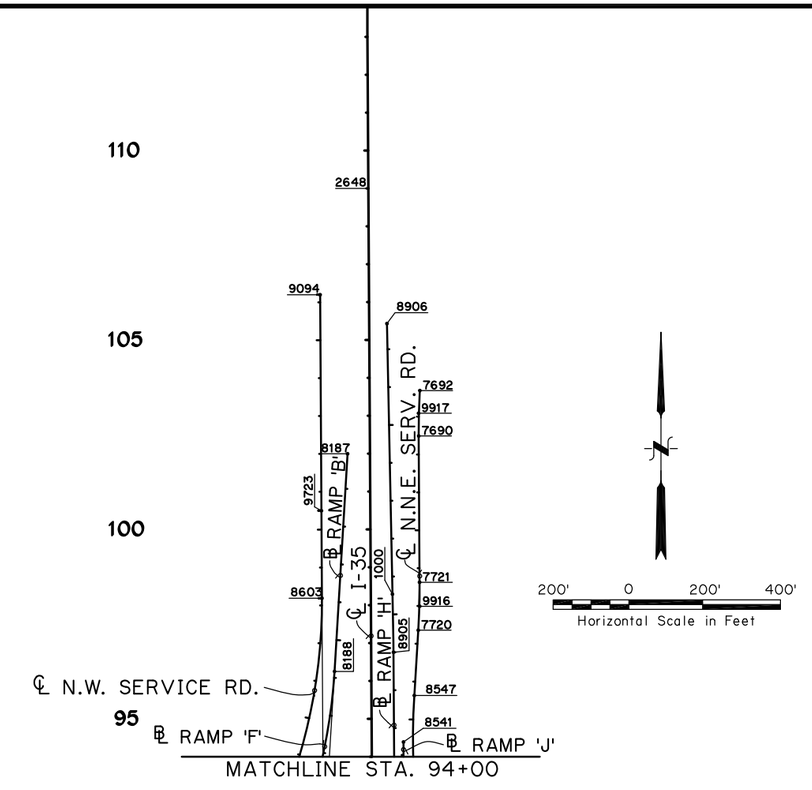

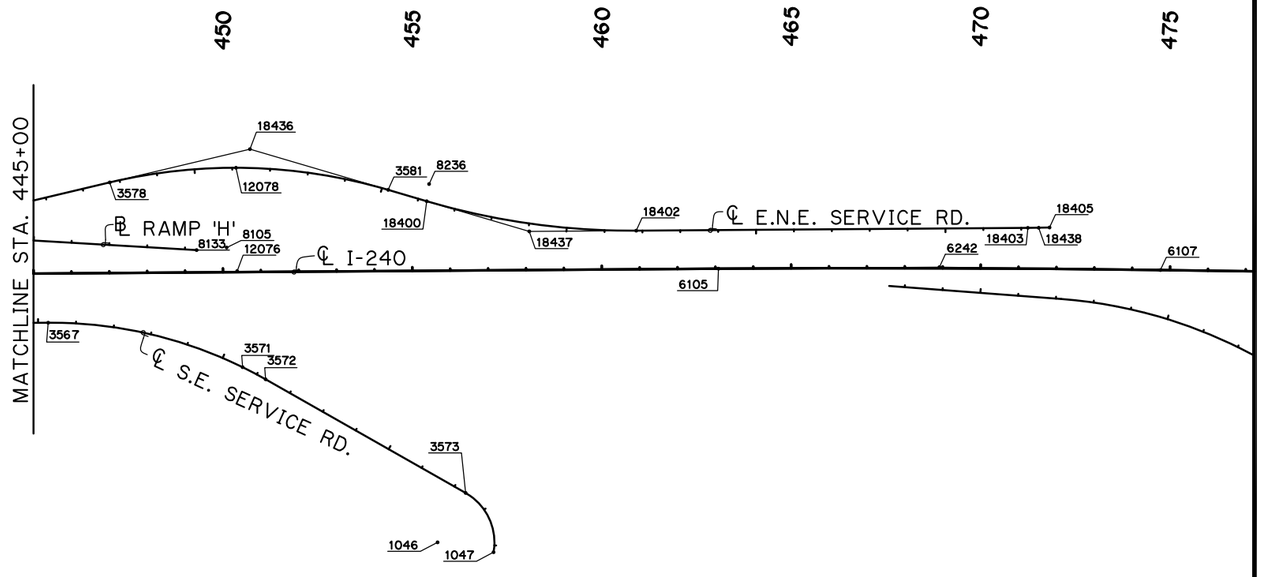

REVISIONS

DESCRIPTION	DATE

Design		
Drawn		
Checked		
Approved		
Squad	POE	

INTERCHANGE GEOMETRIC LAYOUT SHEET & POINT COORDINATE TABLE

State Job No. 09032(17) Sheet No. 20

SEPT 08, 2016 - 09:58:15
H:\PROJECTS\2789_CrossRoads_InterX_New\PHASE IA\Roadway\Drawings\2789-PHASE 1A GEOLAYB.DWG

POINT COORDINATE TABLE

RAMP "A" (N.B. I-35 TO W.B. I-240) CONTINUED — e max = 0.06%

	PT.NO.	STATION AND LOCATION	X COORDINATE	Y COORDINATE	BEARING/CV. DATA
CV. A-3	1008	P.O.C. STA. 89+27.71 = P.O.T. STA. 85+27.74 ℄ I-35	2,150,821.3588	143,548.9515	Δ = 142°55'22.69"RT. D = 07°00'00.00" L = 2041.757' T = 2440.82' R = 818.5111'
	1009	P.O.C. STA. 94+70.80 = P.O.T. STA. 413+21.31 ℄ RAMP "B"	2,150,291.4166	143,490.2950	
	8099	P.T. CV. A-3 STA. 94+96.10	2,150,268.7204	143,479.1224	
	8077	P.O.T. STA. 101+77.63 = SHIFT ℄ 24'RT.	2,149,661.9877	143,168.7094	S 62°54'18.27" W
CV. A-4	8057	P.C. CV. A-4 STA. 101+77.63	2,149,651.0565	143,190.0755	
	1021	P.O.C. STA. 104+16.56 = P.O.T. STA. 414+13.70 ℄ RAMP "L"	2,149,428.5804	143,104.1326	Δ = 33°03'02.30"RT. D = 05°00'00.00" L = 661.013' T = 339.99' R = 1145.9156'
	1022	P.O.C. STA. 104+52.55 = P.O.T. STA. 413+80.99 ℄ RAMP "L"	2,149,393.7022	143,095.2755	
	8861	P.I. CV. A-4 STA. 105+17.62	2,149,348.3824	143,035.2232	
	8039	RAD. PT. CV. A-4	2,149,129.1309	144,210.2305	
	8038	P.T. CV. A-4 STA. 108+38.64	2,149,010.2310	143,070.5001	
CV. A-5	8333	P.C. CV. A-5 STA. 111+86.64	2,148,664.1094	143,106.6085	N 84°02'39.43" W
	9900	P.I. CV. A-5 STA. 112+63.59	2,148,587.5784	143,114.5924	Δ = 01°31'12.00"LT. D = 00°59'15.94" L = 153.884' T = 76.95' R = 5800.578'
	16002	RAD. PT. CV. A-5	2,148,062.2430	137,337.3397	
	8334	P.T. CV. A-5 STA. 113+40.53 BEGIN 25:1 TAPER	2,148,510.8626	143,120.5434	N 89°19'43.36" W
	8335	P.O.T. STA. 116+44.13 END ℄ = 59'LT. P.O.C. STA. 401+94.03 ℄ I-240	2,148,207.2776	143,124.1005	

RAMP "B" (S.B. I-35 TO E.B. I-240) V=45 (V=50) e max = 0.06%

	8187	P.O.T. STA. 395+07.46 BEGIN ℄ = 59' LT. P.O.T. STA. 102+00.00 ℄ I-35	2,150,752.3242	145,218.8247	S 03°26'06.67" W
CV. B-1	8188	P.C. CV. B-1 STA. 400+83.03	2,150,717.8366	144,644.2908	
	8862	P.I. CV. B-1 STA. 403+44.36	2,150,702.1779	144,383.4310	Δ = 20°40'44.10"RT. D = 04°00'00.00" L = 516.973' T = 261.329' R = 1432.3945'
	8189	RAD. PT. CV. B-1	2,150,668.7469	144,348.8898	
	8190	P.O.C. CV. B-1 STA. 406+00.00 BK.= SHIFT ℄ 24'LT. STA. 405+98.58 AHD.	2,150,595.4104	144,144.9069	
CV. B-2	18320	P.C. CV. B-2 STA. 405+98.58	2,150,617.3160	144,135.1015	Δ = 03°22'50.88"RT. D = 03°56'02.70" L = 85.936' T = 42.98' R = 1456.3945'
	18439	P.I. CV. B-2 STA. 406+41.56	2,150,599.7561	144,095.8718	
	8189	RAD. PT. CV. B-2	2,149,288.0158	144,730.1189	
	8201	P.T. CV. B-2 STA. 406+84.52	2,150,579.9133	144,057.7458	
CV. B-3	8105	P.C. CV. B-3 STA. 412+19.79	2,150,332.7935	143,582.9299	S 27°29'41.64" W
	1009	P.O.C. STA. 413+21.31 = P.O.C. STA. 94+70.80 ℄ RAMP "A"	2,150,291.4166	143,490.2950	
	1001	P.O.C. STA. 418+43.36 = P.O.C. STA. 422+60.93 ℄ RAMP "L"	2,150,266.3137	142,977.1501	
	1010	P.O.C. STA. 419+28.51 = P.O.C. STA. 422+85.90 ℄ I-240	2,150,289.8655	142,895.9601	Δ = 151°26'41.10"LT. D = 06°45'00.00" L = 2243.626' T = 3335.52' R = 848.8264'
	1011	P.O.C. STA. 426+37.93 = P.O.C. STA. 90+46.20 ℄ RAMP "C"	2,150,770.9270	142,402.7664	
	1012	P.O.C. STA. 427+00.74 = P.O.T. STA. 73+62.41 ℄ I-35	2,150,830.0658	142,381.6492	
	1002	P.O.C. STA. 432+59.34 = P.O.T. STA. 74+56.43 ℄ RAMP "A"	2,151,378.4977	142,394.3072	
	8863	P.I. CV. B-3 STA. 445+55.31	2,148,792.8849	140,624.1501	
	8102	RAD. PT. CV. B-3	2,151,085.7466	143,191.0525	
	8191	P.T. CV. B-3 STA. 434+63.42	2,151,559.7882	142,486.9283	
	8094	P.O.T. STA. 438+39.71 BK. = SHIFT ℄ 24' RT.	2,151,871.9346	142,697.0765	N 56°03'00.54" E
CV. B-4	8056	P.C. CV. B-4 STA. 438+48.39 AHD. =	2,151,885.3378	142,677.1678	
	8864	P.I. CV. B-4 STA. 441+36.16	2,152,124.0465	142,837.8751	Δ = 33°32'24.06"RT. D = 06°00'00.00" L = 559.000' T = 287.765' R = 954.9297'
	8067	RAD. PT. CV. B-3	2,152,418.6346	141,885.0281	
	8068	P.T. CV. B-4 STA. 444+07.39 = 77' RT. P.O.T. STA. 444+07.39 ℄ I-240	2,152,411.8041	142,839.9334	

RAMP "C" (W.B. I-240 TO S.B. I-35) V=25 (V=30) e max = 0.8%

CV. C-1	8163	P.C. CV. C-1 STA. 71+30.93 BEG. ℄ = P.O.T. STA. 425+32.69 ℄ RAMP "I"	2,150,535.9001	143,002.5195	Δ = 270°03'56.06"RT. D = 24°54'40.35" L = 1084.113' T = 00.00' R = 230.0000'
	8164	RAD. PT. CV. C-1	2,150,534.2549	143,232.5136	
	8170	P.O.C. STA. 72+50.69	2,150,421.2623	143,032.1822	
	8165	P.T. CV. C-1 STA. 82+15.04	2,150,764.2508	143,233.8956	
	1013	P.O.T. STA. 84+44.78 = P.O.T. STA. 427+62.89 ℄ RAMP "I"	2,150,766.0961	143,004.1661	S 00°20'39.33" E
	8981	P.I. STA. 84+50.73 Δ= 00°09'26.1" RT.	2,150,765.6669	142,998.2137	
	18322	P.O.T. STA. 85+49.78 = P.O.T. STA. 427+62.58 ℄ I-240	2,150,766.5338	142,899.1665	S 00°30'05.37" E
	1011	P.O.T. STA. 90+46.20 = P.O.C. STA. 426+37.93 ℄ RAMP "B"	2,150,770.9270	142,402.7664	
	8166	P.I. STA. 91+13.23 = BEGIN 25:1 TAPER	2,150,771.4654	142,335.7384	S 02°47'31.57"E
	8167	P.O.T. STA. 94+13.47 END ℄ = 47' LT. P.O.T. STA. 70+17.01 ℄ I-35	2,150,786.0907	142,035.8549	

POINT COORDINATE TABLE

RAMP "D" (E.B. I-240 TO N.B. I-35) V=25 (V=30) e max = 0.08%

	PT.NO.	STATION AND LOCATION	X COORDINATE	Y COORDINATE	BEARING/CV. DATA
CV. D-1	8024	P.C. CV. C-1 STA. 65+07.43 BEGIN ℄ = 59' RT. P.O.T. STA. 431+11.04 ℄ I-240	2,151,115.4097	142,842.6606	Δ = 269°54'30.02"RT. D = 24°54'40.35" L = 1083.482' T = 00.00' R = 230.0000'
	8021	RAD. PT. CV. D-4	2,151,117.0548	142,612.6664	
	8239	P.O.C. CV. C-1 STA. 66+19.54	2,151,223.3229	142,816.6446	
	8025	P.T. CV. D-1 STA. 75+90.91	2,150,887.0637	142,610.6533	
	18323	P.O.T. STA. 78+80.28 = P.O.T. STA. 428+80.58 ℄ I-240	2,150,884.5309	142,900.0106	N 00°30'05.37" W
	2026	P.I. STA. 79+79.34 Δ = 00°09'26.1" RT.	2,150,883.6339	142,999.0696	
	1016	P.O.T. STA. 79+85.28 = P.O.T. STA. 428+80.43 ℄ RAMP "I"	2,150,883.6282	143,005.0068	N 00°20'39.33" W
	8235	P.I. STA. 84+30.91 BEG. 25:1 TAPER = 59' RT. P.O.T. STA. 84+31.07 ℄ I-35	2,150,880.9507	143,450.6304	
	1007	P.O.T. STA. 85+14.69 = P.O.C. STA. 88+70.08 ℄ RAMP "A"	2,150,877.0994	143,534.3185	N 02°38'05.53" W
	8236	P.O.T. STA. 87+31.15 END ℄ = 47' RT. P.O.T. STA. 87+31.07 ℄ I-35	2,150,867.1484	143,750.5528	

RAMP "E" (N.B. I-35 TO E.B. I-240) V=45 (V=40) e max = 0.06%

CV. E-1	18031	P.C. CV. E-1 STA. 65+33.37 BEG. ℄ = P.T. CV. A-1 STA. 65+33.37 ℄ RAMP "A"	2,151,018.6915	141,544.0195	Δ = 24°09'04.32"RT. D = 04°00'00.00" L = 603.780' T = 306.44' R = 1432.3945'
	18465	P.I. CV. E-1 STA. 68+39.81	2,151,108.3299	141,837.0572	
	18030	RAD. PT. CV. E-1	2,152,388.4360	141,125.0277	
	18029	P.T. CV. E-1 STA. 71+37.15	2,151,310.0156	142,067.7701	N 41°09'34.46" E
CV. E-2	8275	P.C. CV. E-2 STA. 77+29.21	2,151,699.6876	142,513.5232	
	8866	P.I. CV. E-2 STA. 78+54.00	2,151,781.8201	142,607.4760	Δ = 14°53'26.08"RT. D = 06°00'00.00" L = 248.1763' T = 124.791' R = 954.9297'
	8067	RAD. PT. CV. E-2	2,152,418.6346	141,885.0281	
	8056	P.T. CV. E-2 STA. 79+77.39 END ℄ = P.C. CV. B-4 STA. 438+48.39 ℄ RAMP "B"	2,151,885.3378	142,677.1678	

RAMP "F" (S.B. I-35 TO W.B. I-240) V=45 e max = 0.06%

CV. F-1	8190	P.C. CV. F-1 STA. 406+00.00 BEG. ℄ = P.T. CV.B-1 STA.406+00.00 BK. ℄ RAMP "B"	2,150,595.4104	144,144.9069	Δ = 22°06'17.86"RT. D = 05°00'00.00" L = 442.099' T = 223.83' R = 1145.9156'
	8867	P.I. CV. F-1 STA. 408+23.83	2,150,503.9624	143,940.6071	
	18309	RAD. PT. CV. F-1	2,149,549.4947	144,613.0765	
	18310	P.T. CV. F-1 STA. 410+42.10	2,150,342.3572	143,785.7364	S 46°13'08.62" W
CV. F-2	18311	P.C. CV. F-2 STA. 416+24.33	2,149,921.9933	143,382.8904	
	8868	P.I. CV. F-2 STA. 417+92.38	2,149,800.6632	143,266.6164	Δ = 16°41'09.65"RT. D = 05°00'00.00" L = 333.720' T = 168.05' R = 1145.9156'
	8039	RAD. PT. CV. F-2	2,149,129.1309	144,210.2305	
	8057	P.T. CV. F-2 STA. 419+58.05 END ℄ = P.C. CV. A-3 STA. 101+77.63 ℄ RAMP "A"	2,149,651.0565	143,190.0755	

RAMP "G" (E.B. I-240 TO S.B. I-35) V=55 (V=50) e max = 0.06%

	8232	P.O.T. STA. 403+46.03 BEG. ℄ = 59' RT. P.O.C. STA. 403+46.03 ℄ I-240	2,148,354.6410	143,000.3741	S 83°13'40.62" E
	8229	P.I. STA. 406+42.84 = END 25:1 TAPER	2,148,649.3755	142,965.3749	
CV. G-1	8196	P.C. CV. G-1 STA. 413+05.28	2,149,308.2458	142,896.6397	S 84°02'39.43" E
	8194	P.I. CV. G-1 STA. 414+64.52	2,149,466.6282	142,880.1168	Δ = 03°11'02.05"RT. D = 01°00'00.00" L = 318.402' T = 159.24' R = 5729.789'
	8213	RAD. PT. CV. G-1	2,148,713.7245	137,197.7779	
	8214	P.T. CV. G-1 STA. 416+23.68	2,149,623.8485	142,854.8227	S 80°51'37.38" E
CV. G-2	8217	P.C. CV. G-2 STA. 418+78.95	2,149,875.8792	142,814.2752	
	8227	P.I. CV. G-2 STA. 420+84.51	2,150,078.8259	142,781.6244	Δ = 24°17'45.73"RT. D = 06°00'00.00" L = 404.934' T = 205.56' R = 954.9297'
	8220	RAD. PT. CV. G-2	2,149,724.1975	141,871.4690	
	8224	P.C.C. CV. G-2 & G-3 STA. 422+83.89	2,150,250.3638	142,668.3628	
CV. G-3	1017	P.O.C. STA. 424+15.75 = P.O.T. STA. 422+57.84 ℄ RAMP "M"	2,150,355.9821	142,589.5452	Δ = 56°03'46.28"RT. D = 05°00'00.00" L = 1121.257' T = 610.10' R = 1145.9156'
	9901	P.I. CV. G-3 STA. 428+93.99	2,150,759.4960	142,332.1973	
	8470	RAD. PT. CV. G-3	2,149,618.9642	141,712.0903	
	8471	P.T. CV. G-3 STA. 434+05.15	2,150,764.8359	141,722.1200	S 00°30'05.37" E
	8218	P.I. STA. 444+61.03 = BEGIN 25:1 TAPER	2,150,774.0776	140,666.2760	
	8219	P.O.T. STA. 447+61.27 END ℄ = 59' LT. P.O.T. STA. 53+47.59 ℄ I-35	2,150,788.7029	140,366.3925	S 02°47'31.57" E

RAMP "H" (W.B. I-240 TO N.B. I-35) V=45 (V=50) e max = 0.06%

	8906	P.O.T. STA. 407+32.25 BEG. ℄ = 47' RT. P.O.T. STA. 105+43.03 ℄ I-35	2,150,856.2613	145,562.4815	S 01°09'45.76" E
	1000	P.O.T. STA. 414+32.34 BEG. CONST. 57' RT. STA. 98+43.02 ℄ I-35	2,150,873.3082	144,722.5145	S 01°09'05.76" E
	8905	P.I. STA. 415+33.91 = END TAPER	2,150,873.0772	144,760.9983	S 00°20'39.33" E

POINT COORDINATE TABLE

RAMP "H" (W.B. I-240 TO N.B. I-35) CONTINUED — e max = 0.06%

	PT.NO.	STATION AND LOCATION	X COORDINATE	Y COORDINATE	BEARING/CV. DATA
CV. H-1	8129	P.C. CV. H-1 STA. 423+33.91	2,150,877.8840	143,961.0128	S 00°20'39.33" E
	1006	P.O.C. STA. 428+37.77 = P.O.C. STA. 87+26.09 ℄ RAMP "A"	2,151,010.6453	143,480.9951	
	1005	P.O.C. STA. 433+38.43 = P.O.C. STA. 82+23.28 ℄ RAMP "A"	2,151,364.2446	143,134.6747	Δ = 90°03'56.06"LT. D = 06°00'00.00" L = 1501.093' T = 956.02' R = 954.9297'
	8870	P.I. CV. H-1 STA. 432+89.93	2,150,883.6282	143,005.0068	
	8116	RAD. PT. CV. H-1	2,151,832.7964	143,966.7504	
	1018	P.O.C. STA. 434+19.90 = P.O.C. STA. 81+79.21 ℄ RAMP "J"	2,151,436.8552	143,097.7733	
	8109	P.T. CV. 21B-1 STA. 438+35.00	2,151,839.6269	143,011.8451	N 89°35'24.60" E
CV. H-2	8136	P.C. CV. H-2 STA. 441+38.54	2,152,143.1560	143,014.0163	
	8012	P.I. CV. H-2 STA. 442+33.06	2,152,237.6760	143,014.6924	Δ = 03°46'46.30"RT. D = 02°00'00.00" L = 188.976' T = 94.52' R = 2864.789'
	8135	RAD. PT. CV. H-2	2,152,163.6474	140,149.3006	
	8132	P.T. CV. H-2 STA. 443+27.51	2,152,332.0351	143,009.1365	
	8133	P.O.T. STA. 449+30.83 END ℄ = 59' LT. P.O.T. STA. 449+30.83 ℄ I-240	2,152,934.3129	142,973.6743	S 86°37'49.10" E

RAMP "I" (W.B. I-240 TO RAMP "C" & "L") V=55 mph e max = 0.06%

8163	P.O.T. STA. 425+32.69 BEG. ℄ = P.C. CV. C-1 STA. 71+30.93 ℄ RAMP "C"	2,150,535.9001	143,002.5195	N 89°35'24.60" E
1013	P.O.T. STA. 427+62.89 = P.O.T. STA. 84+44.78 ℄ RAMP "C"	2,150,766.0961	143,004.1661	
1025	P.O.T. STA. 428+21.43 = P.O.T. STA. 79+85.37 ℄ I-35	2,150,824.6337	143,004.5848	
1016	P.O.T. STA. 428+80.43 = P.O.T. STA. 79+85.28 ℄ RAMP "D"	2,150,883.6282	143,005.0068	
1004	P.O.T. STA. 434+15.00 = P.O.C. STA. 80+86.20 ℄ RAMP "A"	2,151,418.1807	143,008.8305	
1019	P.O.T. STA. 434+57.61 = P.O.C. STA. 80+87.37 ℄ RAMP "J"	2,151,460.7901	143,009.1353	
8109	P.O.T. STA. 438+36.46 END ℄ = P.T. CV. H-1 STA. 438+35.00 ℄ RAMP "H"	2,151,839.6269	143,011.8451	

RAMP "J" (N.B. I-35 TO N.E. SERVICE RD.) V=40 mph e max = 0.06%

CV. J-1	8463	P.C. CV. J-1 STA. 77+07.36 BEG. ℄ = 24' RT. P.O.C. STA. 77+07.36 ℄ RAMP "A"	2,151,475.5959	142,631.4878	Δ = 27°31'30.50"LT. D = 05°27'12.52" L = 504.727' T = 257.33' R = 1050.6285'
	1020	P.O.C. STA. 79+80.93 = P.O.T. STA. 434+74.79 ℄ I-240	2,151,478.7251	142,904.2609	
	1019	P.O.C. STA. 80+87.37 = P.O.T. STA. 434+57.61 ℄ RAMP "I"	2,151,460.7901	143,009.1353	
	9902	P.I. CV. J-1 STA. 79+64.69	2,151,511.9281	142,886.2416	
	8464	RAD. PT. CV. J-1	2,150,435.4918	142,779.8241	
	1018	P.O.C. STA. 81+79.21 = P.O.C. STA. 434+19.90 ℄ RAMP "H"	2,151,436.8552	143,097.7733	
	8458	P.T. CV. J-1 STA. 82+12.09	2,151,426.4164	143,128.9497	N 19°24'30.74" W
CV. J-2	8477	P.C. CV. J-2 STA. 82+14.63	2,151,425.5709	143,131.3495	
	9903	P.I. CV. J-2 STA. 83+62.09	2,151,376.5711	143,270.4257	Δ = 28°51'53.07"LT. D = 10°00'00.00" L = 288.647' T = 147.46' R = 572.9578'
	8478	RAD. PT. CV. J-2	2,150,885.1725	142,940.9546	
	8479	P.T. CV. J-2 STA. 85+03.28	2,151,266.5209	143,368.5690	N 48°16'23.81" W
CV. J-3	9010	P.O.T. STA. 86+17.72 SHIFT ℄ 15' LT.	2,151,181.1098	143,444.7390	
	9000	P.O.T. STA. 86+17.72	2,151,171.1261	143,433.5440	Δ = 48°05'33.97"RT. D = 11°00'00.65" L = 437.200' T = 232.41' R = 520.8622'
	8485	RAD. PT. CV. J-3	2,151,080.8371	143,514.0641	
	8481	RAD. PT. CV. J-3	2,151,437.5011	143,913.9994	
	8540	P.O.T. STA. 91+88.49	2,150,901.6331	143,912.3033	N 00°10'52.85" W
	8898	P.O.T. STA. 92+08.49	2,150,901.5698	143,932.3032	
	8545	P.O.T. STA. 95+41.49	2,150,900.5158	144,265.3012	
	8541	P.O.T. STA. 97+34.20 END ℄ = 25'LT. P.O.C. STA. 94+40.75 ℄ N.E.SERV.RD.	2,150,900.5158	144,265.3012	

REVISIONS

DESCRIPTION	DATE

Design			POINT COORDINATE TABLES I-35 & I-240 INTERCHANGE
Drawn			
Checked			
Approved			
Squad	POE		State Job No. 09032(17) Sheet No. 21

SEPT 08, 2016 - 10:02:16
H:\PROJECTS\2789_CrossRoads_InterX_New\PHASE IA\Roadway\Drawings\2789-PHASE 1A PNTCDS1.DWG

POINT COORDINATE TABLE

RAMP "K" (E.B. I-240 TO POLE RD.)

e max = 0.06%

	PT.NO.	STATION AND LOCATION	X COORDINATE	Y COORDINATE	BEARRING/CV. DATA
		EDGE OF RIGHT TURN LANE			
CV. K-3	8951	P.C.C. STA. 461+21.66	2,153,837.5502	142,424.5344	Δ = 99°42'35.26"RT. D = 45°50'11.85" L = 217.533' T = 148.21' R = 125.000'
CV. K-3	9907	P.I. CV. K-3 STA. 462+69.87	2,153,801.2702	142,280.8383	
CV. K-3	8265	RAD. PT. CV. K-3	2,153,716.3534	142,455.1339	
CV. K-3	8264	P.T. CV. K-3 STA. 463+39.19 EDGE LANE	2,153,665.7515	142,340.8342	N 66°07'13.53" W
CV. K-3	12101	P.O.T. STA. 463+86.09 END LANE = 13' LT. ℄ EXIST. SERVICE ROAD	2,153,622.8697	142,359.8185	

RAMP "L" (W.B. I-240 TO N.W. SERVICE RD.)

V=45 e max = 0.06%

	PT.NO.	STATION AND LOCATION	X COORDINATE	Y COORDINATE	BEARRING/CV. DATA
	6737	P.O.T. STA. 404+06.51 BEG. ℄ = 25'RT.P.O.T. STA. 66+46.67 ℄ N.W.SERV.RD.	2,148,423.5056	143,154.6038	N 89°27'24.62" E
CV. L-1	8347	P.C. CV. L-1 STA. 407+47.18	2,148,764.1619	143,157.8333	Δ = 10°55'46.38"LT. D = 02°00'00.00" L = 546.477' T = 274.07' R = 2864.789'
CV. L-1	8346	P.I. CV. L-1 STA. 410+21.23	2,149,038.2199	143,160.4314	
CV. L-1	8350	RAD. PT. CV. L-1	2,148,791.3196	140,293.1730	
CV. L-1	8351	P.T. CV. L-1 STA. 412+93.66	2,149,307.7994	143,111.0205	
	1022	P.O.T. STA. 413+80.99 = P.O.C. STA. 104+52.55 ℄ RAMP "A"	2,149,393.7022	143,095.2755	
	8910	P.O.T. STA. 414+06.16 BK.	2,149,418.4561	143,090.7384	S 79°36'49.00" E
CV. L-2	8339	P.C. CV. L-2 STA. 417+75.78	2,149,782.0208	143,024.1011	
CV. L-2	8362	P.I. CV. L-2 STA. 420+49.31	2,150,050.9963	142,990.0507	Δ = 10°47'46.40"RT. D = 02°00'00.00" L = 539.811' T = 270.71' R = 2864.789'
CV. L-2	8290	RAD. PT. CV. L-2	2,150,301.2049	145,856.7028	
CV. L-2	1023	P.O.C. STA. 422+18.37 = P.O.C. STA. 418+46.11 ℄ RAMP "M"	2,150,221.7688	142,978.0096	
CV. L-2	1001	P.O.C. STA. 422+60.93 = P.O.C. STA. 418+43.36 ℄ RAMP "B"	2,150,264.3137	142,977.1501	
CV. L-2	8179	P.T. CV. L-2 STA. 423+18.42	2,150,321.8037	142,976.9874	
	8359	P.O.T. STA. 424+08.82 = 96' LT. P.O.T. STA. 424+08.81 ℄ I-240	2,150,412.0927	142,992.6337	N 89°35'24.60" E
	8139	P.O.T. STA. 424+08.82 END ℄	2,150,412.2000	142,977.6341	

RAMP "M" (S.B. I-35 TO S.W. SERVICE RD.)

V=45 e max = 0.06%

	PT.NO.	STATION AND LOCATION	X COORDINATE	Y COORDINATE	BEARRING/CV. DATA
CV. M-1	8711	P.C. CV. M-1 STA. 414+39.37 BEG. ℄ = 15' RT. P.O.C. STA. 414+39.37 ℄ RAMP "B"	2,150,242.9660	143,380.5701	Δ = 37°37'51.34"LT. D = 06°31'16.81" L = 577.043' T = 299.36' R = 878.5895'
CV. M-1	9908	P.I. CV. M-1 STA. 417+38.73	2,150,159.0625	143,093.2078	
CV. M-1	8717	RAD. PT. CV. M-1	2,151,086.3413	143,134.3230	
CV. M-1	1023	P.O.C. STA. 418+46.11 = P.O.C. STA. 422+18.37 ℄ RAMP "L"	2,150,221.7688	147,978.0096	
CV. M-1	1024	P.O.C. STA. 419+30.06 = P.O.C. STA. 422+36.66 ℄ I-240	2,150,240.6267	142,896.2341	
CV. M-1	8616	P.T. CV. M-1 STA. 420+16.41	2,150,268.0699	142,814.3990	
	1017	P.O.T. STA. 422+57.84 = P.O.C. STA. 424+15.75 ℄ RAMP "G"	2,150,355.9821	142,589.5452	S 21°21'15.40" E
CV. M-2	8690	P.C. CV. M-2 STA. 423+49.76	2,150,389.4532	142,503.9361	Δ = 08°58'43.64"LT. D = 04°00'00.00" L = 224.470' T = 112.47' R = 1432.3945'
CV. M-2	8643	P.I. CV. M-2 STA. 424+62.23	2,150,430.4056	142,399.1921	
CV. M-2	8691	RAD. PT. CV. M-2	2,151,723.5091	143,025.5191	
CV. M-2	8692	P.T. CV. M-2 STA. 425+74.23	2,150,487.2033	142,302.1229	
	18975	P.O.T. STA. 426+70.07 BK. SHIFT ℄ 15' LT.	2,150,535.6050	142,219.4030	S 30°19'59.04"E
	18976	P.O.T. STA. 426+70.07 AHD. SHIFTED ℄ 15' LT.	2,150,548.5516	142,226.9784	
CV. M-3	8619	P.C. CV. M-3 STA. 428+66.98	2,150,647.9978	142,057.0219	Δ = 29°49'53.64"RT. D = 08°00'00.00" L = 372.895' T = 190.78' R = 716.1972'
CV. M-3	9909	P.I. CV. M-3 STA. 430+57.76	2,150,744.3449	141,892.3618	
CV. M-3	8683	RAD. PT. CV. M-3	2,150,029.8449	141,695.3239	
CV. M-3	8684	P.T. CV. M-3 STA. 432+39.88	2,150,746.0147	141,701.5925	
	8743	P.O.T. STA. 435+39.70 END ℄ = 25'RT.P.O.T. STA. 63+83.28 ℄ S.W.SERV.RD.	2,150,748.6390	141,401.7775	S 00°30'05.40" E

POINT COORDINATE TABLE

NORTHWEST SERVICE ROAD

e max = 0.08%

	PT.NO.	STATION AND LOCATION	X COORDINATE	Y COORDINATE	BEARRING/CV. DATA
	6728	P.I. STA. 55+27.59	2,147,304.4828	143,204.3943	S 88°39'01.99" E
CV. NW-3	6732	.C. CV. NW-3 STA. 65+52.04	2,148,328.6447	143,180.2685	
CV. NW-3	6729	P.I. CV. NW-3 STA. 65+99.36	2,148,375.9511	143,179.1541	Δ = 1°53'33.39"LT. D = 2°00'00.00" L = 94.63' T = 47.32' R = 2,864.789'
CV. NW-3	6731	RAD. PT. CV. NW-3	2,148,396.1109	146,044.2629	
CV. NW-3	6730	P.T. CV. NW-3 STA. 66+46.67	2,148,423.2686	143,179.6027	N 89°27'24.62" E
CV. NW-4	8597	P.I. CV. NW-4 STA. 72+69.02	2,149,045.5948	143,185.5025	
CV. NW-4	9924	P.I. CV. NW-4 STA. 78+36.69	2,149,613.2408	143,190.8839	Δ = 43°14'16.00"LT. D = 04°00'00.00" L = 1080.945' T = 567.67' R = 1432.3945'
CV. NW-4	8598	RAD. PT. CV. NW-4	2,149,032.0160	144,617.8326	
CV. NW-4	8599	P.T. CV. NW-4 STA. 83+49.96	2,150,023.0941	143,583.6575	N 46°13'08.62" E
CV. NW-5	8601	P.C. CV. NW-5 STA. 86+55.01	2,150,243.3293	143,794.7148	
CV. NW-5	9925	P.I. CV. NW-5 STA. 92+71.35	2,150,688.3231	144,221.1645	Δ = 46°33'47.95"LT. D = 04°00'00.00" L = 1164.083' T = 616.341' R = 1432.3945'
CV. NW-5	8602	RAD. PT. CV. NW-5	2,149,252.2512	144,828.8900	
CV. NW-5	8603	P.T. CV. NW-5 STA. 98+19.09	2,150,684.6199	144,837.4964	
	9723	P.O.T. STA. 100+50.00 ℄ = 128.99'LT. P.O.T. STA. 100+50.00 ℄ I-35	2,150,683.2325	145,068.4046	N 00°20'39.33" W
	9094	P.O.T. STA. 106+20.18 END ℄ = P.O.T. STA. 207+74.00 ℄ S.E. 66th ST.	2,150,679.8066	145,638.5743	

EAST NORTHEAST SERVICE ROAD

e max = 0.08%

	PT.NO.	STATION AND LOCATION	X COORDINATE	Y COORDINATE	BEARRING/CV. DATA
CV. NE-1	18405	P.C. CV. NE-1 STA. 42+25.27 BEG. ℄ = 109.24'LT. P.O.T. STA. 471+81.11 ℄ I-240	2,155,185.8491	143,033.3536	Δ = 01°08'45.00"RT. D = 02°00'00.00" L = 57.292' T = 28.65' R = 2864.789'
CV. NE-1	18438	P.I. CV. NE-1 STA. 42+53.92	2,155,157.2128	143,032.5759	
CV. NE-1	18404	RAD. PT. CV. NE-1	2,155,108.0753	145,897.0867	
CV. NE-1	18403	P.T. CV. NE-1 STA. 42+82.56	2,155,128.5668	143,032.3909	S 89°35'24.60" W
CV. NE-2	18402	P.C. CV. NE-2 STA. 53+16.41	2,154,094.7478	143,024.9760	
CV. NE-2	18437	P.I. CV. NE-2 STA. 55+98.70	2,153,812.4625	143,022.9568	Δ = 16°48'56.88"RT. D = 03°00'00.00" L = 560.527' T = 282.29' R = 1909.8593'
CV. NE-2	18401	RAD. PT. CV. NE-2	2,154,081.0868	144,934.7864	
CV. NE-2	18400	P.T. CV. NE-2 STA. 58+76.93	2,153,541.6635	143,102.6879	N 73°35'38.51" W
CV. NE-3	3581	P.C. CV. NE-3 STA. 59+82.86	2,153,440.0475	143,132.6066	
CV. NE-3	12078	P.O.C. STA. 63+90.29 = P.O.T. STA. 62+91.39 ℄ POLE RD.	2,153,038.2018	143,190.9246	Δ = 29°45'21.60"LT. D = 04°00'00.00" L = 743.900' T = 380.542' R = 1432.3945'
CV. NE-3	18436	P.I. CV. NE-3 STA. 63+63.40	2,153,074.9996	143,240.0874	
CV. NE-3	3579	RAD. PT. CV. NE-3	2,153,035.4800	141,758.5327	
CV. NE-3	3578	P.T. CV. NE-3 STA. 67+26.76	2,152,704.7409	143,152.2205	S 76°38'59.89" W
CV. NE-4	8662	P.C. CV. NE-4 STA. 69+89.93	2,152,448.6825	143,091.4547	
CV. NE-4	9912	P.I. CV. NE-4 STA. 70+98.23	2,152,343.3132	143,066.4493	Δ = 12°56'24.72"RT. D = 06°00'00.00" L = 215.670' T = 108.30' R = 954.9297'
CV. NE-4	8388	RAD. PT. CV. NE-4	2,152,228.1898	144,020.5799	
CV. NE-4	8660	P.T. CV. NE-4 STA. 72+05.60	2,152,235.0202	143,065.6747	S 89°35'24.60" W
CV. NE-5	9187	P.I. CV. NE-5 STA. 73+98.56	2,152,042.0648	143,064.2945	
CV. NE-5	9190	P.C. CV. NE-5 STA. 74+46.23	2,151,994.3963	143,063.9535	Δ = 78°28'12.78"RT. D = 229°10'59.23" L = 34.239' T = 20.42' R = 25.000'
CV. NE-5	9913	P.I. CV. NE-5 STA. 74+66.65	2,151,973.9818	143,063.8075	
CV. NE-5	9191	RAD. PT. CV. NE-5	2,151,994.2174	143,088.9528	
CV. NE-5	9192	P.T. CV. NE-5 STA. 74+80.47	2,151,969.7583	143,083.7808	N 11°56'22.62" W
CV. NE-5	9188	P.O.T. STA. 76+16.16 END ℄	2,151,941.6875	143,216.5315	

SOUTHEAST SERVICE ROAD

e max = 0.08%

	PT.NO.	STATION AND LOCATION	X COORDINATE	Y COORDINATE	BEARRING/CV. DATA
	7729	P.O.T. STA. 55+00.00 BEG. ℄ = 177.63'RT. P.O.T. STA. 54+97.14 ℄ I-35	2,151,024.0136	140,518.0042	N 04°26'13.60" E
CV. SE-1	8792	P.C. CV. SE-1 STA. 62+27.40	2,151,080.2890	141,243.2273	
CV. SE-1	9910	P.I. CV. SE-1 STA. 64+70.65	2,151,099.1080	141,485.7480	Δ = 28°34'55.58"RT. D = 06°00'00.00" L = 476.368' T = 243.25' R = 954.9297'
CV. SE-1	8793	RAD. PT. CV. SE-1	2,152,032.3566	141,169.3494	
CV. SE-1	8826	P.T. CV. SE-1 STA. 67+03.77	2,151,231.6597	141,689.7100	N 33°01'09.18" E
CV. SE-2	8827	P.C. CV. SE-2 STA. 75+26.82	2,151,680.1528	142,379.8220	
CV. SE-2		P.I. CV. SE-2 STA. 80+01.16	2,151,938.6283	142,777.5473	Δ = 56°34'15.42"RT. D = 06°30'00.00" L = 870.3223' T = 474.34' R = 881.4735'
CV. SE-2	8790	RAD. PT. CV. SE-2	2,152,419.2576	141,899.4892	
CV. SE-2	8791	P.T. CV. SE-2 STA. 83+97.14 END ℄ = 130.0' RT. P.O.T. STA. 444+08.11 ℄ I-240	2,152,412.9526	142,780.9401	N 89°35'24.60" E
CV. SE-3	3567	P.C. CV. SE-3 STA. 85+26.59	2,152,542.4008	142,781.8661	
CV. SE-3	3568	RAD. PT. CV. SE-3	2,152,550.5974	141,635.9798	Δ = 30°00'00.00"RT. D = 05°00'00.00" L = 600.0000' T = 307.05' R = 1145.9156'
CV. SE-3	3571	P.O.C. CV. SE-3	2,153,055.6882	142,664.5739	
CV. SE-3	3572	P.T. CV. SE-3 STA. 91+26.59	2,153,116.4421	142,632.4447	
CV. SE-3	3573	P.O.T. CV. SE-3 STA. 97+01.59	2,153,616.4504	142,348.5139	S 60°24'35.40" E

POINT COORDINATE TABLE

SOUTHEAST SERVICE ROAD CONTINUED

e max = 0.08%

	PT.NO.	STATION AND LOCATION	X COORDINATE	Y COORDINATE	BEARRING/CV. DATA
CV. SE-4	1044	P.C. CV. SE-4 STA. 97+33.78	2,153,644.4423	142,332.6187	S 60°24'35.40" E
CV. SE-4	1046	RAD. PT. CV. SE-4	2,153,570.3734	142,202.1817	Δ = 70°25'09.54"RT. D = 38°11'49.87" L = 184.3573' T = 105.85' R = 150.0000'
CV. SE-4	1047	P.T. CV. SE-4 STA. 99+18.14	2,153,718.0902	142,176.1100	

SOUTHWEST SERVICE ROAD

e max = 0.08%

	PT.NO.	STATION AND LOCATION	X COORDINATE	Y COORDINATE	BEARRING/CV. DATA
	9712	P.O.T. STA. 54+39.73 BEG. ℄ = 156.09'LT. P.O.T. STA. 54+41.02 ℄ I-35	2,150,690.7987	140,458.9682	N 03°16'40.93"E
CV. SW-1	18339	P.C. CV. SW-1 STA. 59+68.57	2,150,721.0382	140,986.9378	Δ = 03°46'46.33"LT. D = 02°00'00.00" L = 188.977' T = 94.52' R = 2864.789'
CV. SW-1	9918	P.I. CV. SW-1 STA. 60+63.09	2,150,726.4431	141,081.3058	
CV. SW-1	18336	RAD. PT. CV. SW-1	2,147,860.9365	141,150.7502	
CV. SW-1	18338	P.T. CV. SW-1 STA. 61+57.54	2,150,725.6158	141,175.8249	
	8744	P.I. STA. 63+83.28 = 114.99'LT. P.O.T. STA. 63+83.00 ℄ I-35	2,150,723.6399	141,401.5586	N 00°30'05.40"W
CV. SW-2	18745	P.C. CV. SW-2 STA. 66+92.82	2,150,714.7420	141,710.9637	N 01°38'50.15 W
CV. SW-2	9919	P.I. CV. SW-2 STA. 68+40.42	2,150,710.4989	141,858.5099	Δ = 34°21'27.96"LT. D = 12°00'00.00" L = 286.315' T = 147.61' R = 477.4648'
CV. SW-2	18799	RAD. PT. CV. SW-2	2,150,237.4745	141,697.2384	
CV. SW-2	18089	P.T. CV. SW-2 STA. 69+79.13	2,150,623.7270	141,977.9191	N 36°00'18.10" W
CV. SW-3	8697	P.C. CV. SW-3 STA. 76+14.77	2,150,250.0605	142,492.1321	Δ = 44°51'19.28"LT. D = 08°00'00.00" L = 560.692' T = 295.60' R = 716.1972'
CV. SW-3	9920	P.I. CV. SW-3 STA. 79+10.37	2,150,076.2901	142,731.2623	
CV. SW-3	8693	RAD. PT. CV. SW-3	2,149,670.6817	142,071.1111	
CV. SW-3	8689	P.T. CV. SW-3 STA. 81+75.47	2,149,784.4430	142,778.2156	N 80°51'37.38" W
CV. SW-4	8688	P.C. CV. SW-4 STA. 84+26.68	2,149,536.4175	142,818.1188	Δ = 03°11'02.05"LT. D = 02°00'00.00" L = 159.195' T = 79.62' R = 2864.789'
CV. SW-4	9921	P.I. CV. SW-4 STA. 85+06.30	2,149,457.8102	142,830.7654	
CV. SW-4	8687	RAD. PT. CV. SW-4	2,149,081.3722	139,989.7005	
CV. SW-4	8658	P.T. CV. SW-4 STA. 85+85.88	2,149,378.6219	142,839.0265	N 84°02'39.43" W
CV. SW-5	6698	P.C. CV. SW-5 STA. 95+82.78	2,148,387.1017	142,942.4647	Δ = 08°17'52.86"LT. D = 03°00'00.00" L = 276.601' T = 138.54' R = 1909.8593'
CV. SW-5	6693	P.I. CV. SW-5 STA. 97+21.32	2,148,249.3069	142,956.8398	
CV. SW-5	6699	RAD. PT. CV. SW-5	2,148,188.9352	141,042.9141	
CV. SW-5	6700	P.T. CV. SW-5 STA. 98+59.38	2,148,110.8801	142,951.1777	
	6761	P.I. STA. 105+73.65 = P.O.T. STA. 146+15.65 ℄ SHIELDS BLVD.	2,147,397.2056	142,921.9857	S 87°39'27.70" W

REVISIONS

DESCRIPTION	DATE

Design		
Drawn		
Checked		
Approved		
Squad	POE	

POINT COORDINATE TABLES
I-35 & I-240 INTERCHANGE

State Job No. 09032(17) Sheet No. 22

SEPT 08, 2016 - 10:07:03
H:\PROJECTS\2789__CrossRoads__InterX__New\PHASE IA\Roadway\Drawings\2789-PHASE 1A PNTCDS2.DWG

POINT COORDINATE TABLE

NORTH NORTHEAST SERVICE ROAD CON'T.

e max = 0.08%

	PT.NO.	STATION AND LOCATION	X COORDINATE	Y COORDINATE	BEARRING/CV. DATA
	9172	STA. 87+62.70 BEGIN CONST.	2,151,111.9505	143,933.3731	S 86°26'56.73" W
CV. NNE-1	9169	P.C. CV. NNE-1 STA. 88+75.52	2,150,999.3467	143,926.3856	Δ = 90°38'52.92"RT. D = 108°06'18.88" L = 83.852' T = 53.60' R = 53.0000'
CV. NNE-1	9914	P.I. CV. NNE-1 STA. 89+29.12	2,150,945.8194	143,923.5409	
CV. NNE-1	9166	RAD. PT. CV. NNE-1	2,150,996.5340	143,979.3109	
CV. NNE-1	9164	P.T. CV. NNE-1 STA. 89+59.37	2,150,943.5803	143,977.0970	N 02°23'38.57" W
CV. NNE-2	8533	P.C. CV. NNE-2 STA. 93+66.49	2,150,926.5744	144,383.8548	Δ = 05°52'17.54"RT. D = 02°58'46.98" L = 197.050' T = 98.61' R = 1922.8593'
CV. NNE-2	9915	P.I. CV. NNE-2 STA. 94+65.10	2,150,922.4553	144,482.3802	
CV. NNE-2	3161	RAD. PT. CV. NNE-2	2,152,847.7554	144,464.1762	
CV. NNE-2	8547	P.T. CV. NNE-2 STA. 95+63.54	2,150,928.4367	144,580.8100	N 03°28'38.97" E
CV. NNE-3	7720	P.C. CV. NNE-3 STA. 97+36.17	2,150,938.9075	144,753.1170	Δ = 03°49'18.27"LT. D = 03°01'14.02" L = 126.524' T = 63.29' R = 1896.8593'
CV. NNE-3	9916	P.I. CV. NNE-3 STA. 97+99.46	2,150,942.9462	144,816.2861	
CV. NNE-3	3164	RAD. PT. CV. NNE-3	2,149,045.5409	144,868.1738	
CV. NNE-3	7721	P.T. CV. NNE-3 STA. 98+62.69	2,150,942.3659	144,879.5706	N 00°20'39.30" W
CV. NNE-4	7690	P.C. CV. NNE-4 STA. 102+48.86	2,150,940.0457	145,265.7300	Δ = 03°35'43.00"RT. D = 03°00'00.00" L = 119.843' T = 59.94' R = 1909.8593'
CV. NNE-4	9917	P.I. CV. NNE-4 STA. 103+08.80	2,150,939.6856	145,325.6699	
CV. NNE-4	7691	RAD. PT. CV. NNE-4	2,152,849.8706	145,277.2050	
CV. NNE-4	7692	P.T. CV. NNE-4 STA. 103+68.70 END ℄ = 132.76'RT. P.O.T. STA.103+65.54 ℄ I-35	2,150,943.0849	145,385.5144	

℄ RAMP 'SF3'

e max = 0.06%

	PT.NO.	STATION AND LOCATION	X COORDINATE	Y COORDINATE	BEARRING/CV. DATA
	7216	P.O.T. STA. 380+37.16 BEG. ℄ RAMP 'SF3' = P.O.T.STA.380+37.26 ℄ I-240 89.65'LT.	2,146,044.4230	143,137.7041	S 88°05'29.38" E
CV. SF3-1	7288	P.C. CV. SF3-1 STA. 381+51.98	2,146,159.1725	143,133.8804	Δ = 03°35'29.38"RT. D = 02°30'00.00" L = 143.66' T = 71.85' R = 2291.831'
CV. SF3-1	9914	P.I. CV. SF3-1 STA. 382+23.83	2,146,230.9861	143,131.4874	
CV. SF3-1	7289	RAD. PT. CV. SF3-1	2,146,082.8464	140,843.3205	
CV. SF3-1	7290	P.T. CV. SF3-1 STA. 382+95.64	2,146,302.5087	143,124.6006	S 84°30'00.00" E
	31383	P.O.T. STA. 383+96.623 BK ℄ RAMP 'SF3' =	2,146,403.0308	143,114.9214	℄ SHIFT 19' LT.
	31384	P.O.T. STA. 383+96.62 FWD. ℄ RAMP 'SF3'	2,146,404.8518	143,133.8339	S 84°30'00.00" E
CV. SF3-2	7280	P.C. CV. SF3-2 STA. 384+97.61	2,146,505.3724	143,124.1549	Δ = 06°02'35.38"LT. D = 02°30'00.00" L = 241.73' T = 120.98' R = 2291.831'
CV. SF3-2	31379	P.I. CV. SF3-2 STA. 386+18.58	2,146,625.7909	143,112.5599	
CV. SF3-2	7284	RAD. PT. CV. SF3-2	2,146,725.0347	145,405.4349	
CV. SF3-2	7285	P.T. CV. SF3-2 STA. 387+39.34 END ℄ = P.O.T.STA. 387+39.34 ℄ I-240, 59.00' LT.	2,146,746.7608	143,113.7067	N 89°27'24.62" E

℄ RAMP 'SF4'

e max = 0.06%

	PT.NO.	STATION AND LOCATION	X COORDINATE	Y COORDINATE	BEARRING/CV. DATA
	7261	P.O.T. STA. 378+47.69 BEG. ℄ RAMP 'SF4' = P.O.T.STA.378+47.90 ℄ I-240 98.10' RT.	2,145,856.8555	142,948.1608	N 85°47'00.60" E
CV. SF4-1	7400	P.C. CV. SF4-1 STA. 380+07.49	2,146,016.5286	142,959.9327	Δ = 01°59'59.99"LT. D = 01°30'00.00" L = 133.33' T = 66.67' R = 3819.7186'
CV. SF4-1	7204	P.I. CV. SF4-1 STA. 380+74.16	2,146,083.0215	142,964.8349	
CV. SF4-1	7401	RAD. PT. CV. SF4-1	2,145,735.6821	146,769.3126	
CV. SF4-1	7402	P.T. CV. SF4-1 STA. 381+40.82	2,146,149.3028	142,972.0546	N 83°47'00.60" E
	7428	P.O.T. STA. 382+63.29 BK ℄ RAMP 'SF4' =	2,146,271.0441	142,985.3154	℄ SHIFT 19' RT.
	31615	P.O.T. STA. 382+63.291 FWD. ℄ RAMP 'SF4'	2,146,273.1016	142,966.4272	4 83°47'00.60" E
CV. SF4-2	7425	P.C. CV. SF4-2 STA. 383+83.22	2,146,392.3296	142,979.4142	Δ = 05°40'24.02"RT. D = 02°10'16.11" L = 261.31' T = 130.76' R = 2638.970'
CV. SF4-2	31700	P.I. CV. SF4-2 STA. 385+13.98	2,146,522.3210	142,993.5737	
CV. SF4-2	7427	RAD. PT. CV. SF4-2	2,146,678.0922	140,355.9620	
CV. SF4-2	7426	P.T. CV. SF4-2 STA.386+44.53 END ℄ = P.O.T.STA. 386+44.53 ℄ I-240, 59.00' RT.	2,146,653.0753	142,994.9133	N 89°27'24.62" E

REVISIONS

DESCRIPTION	DATE

Design		
Drawn		
Checked		
Approved		
Squad	POE	

POINT COORDINATE TABLES
I-35 & I-240 INTERCHANGE

State Job No. 09032(17) Sheet No. 23

SEPT 08, 2016 - 10:07:03
H:\PROJECTS\2789_CrossRoads_InterX_New\PHASE IA\Roadway\Drawings\2789-PHASE 1A PNTCDS2.DWG

MATCH LINE 2 SEE NEXT SHEET

REVISIONS	
DESCRIPTION	DATE

200' 0 200' 400'
Horizontal Scale in Feet

2030 ADT

K=.....9%
D=.....55%
T(dhv).....6%
T(adt).....10%
T(3).....7%
AXLES.....15

SEC. 34, T11N, R3W

SEC. 27, T11N, R3W

SEC. 35, T11N, R3W

SEC. 26, T11N, R3W

S.E. 82ND ST.

S.E. 79TH ST.

I-35

I-240

S.E. SERV. RD.

S.W. SERV. RD.

N.W. SERV. RD.

N.E. SERV. RD.

POLE RD.

RAMP "A"
RAMP "B"
RAMP "C"
RAMP "D"
RAMP "E"
RAMP "F"
RAMP "G"
RAMP "H"
RAMP "I"
RAMP "K"
RAMP "L"
RAMP "M"

66740
67000
38400
3160
43000
17200
2500
8250
9015
6515
21200
48550
24000
40300
9200
72550
9200
78450
35800
42650
54900
5250
11410
4300
60150
12250
28340
25500
10300
30750
16815
16660
47565
45000
6500
41065

MATCH LINE 1

MATCH LINE 1

TRAFFIC COUNTS FURNISHED BY:
OKLAHOMA DEPARTMENT OF TRANSPORTATION

Design		
Drawn		
Checked		
Approved		
Squad	POE	

ULTIMATE FACILITY TRAFFIC DATA

SHEET 1 OF 2

State Job No. 09032(17) Sheet No. 24

SEPT 08, 2016 - 15:43:28
H:\PROJECTS\2789__CrossRoads__InterX__New\PHASE IA\Roadway\Drawings\2789-PHASE 1A-TRAFDAT1.DWG

REVISIONS	
DESCRIPTION	DATE

200' 0 200' 400'
Horizontal Scale in Feet

SEC. 27, T11N, R3W

S.E. 66TH ST.

26215
66515
7835
74350
8800
40300
I-35
LT. SERV. RD.
RT. SERV. RD.
65550
4800
55350
60150

SEC. 26, T11N, R3W

S.E. 59TH ST.

SEC. 22, T11N, R3W

HIGH AVE.

I-35

SEC. 23, T11N, R3W

I-240
SHIELDS BLVD.
67000
66740

MATCH LINE 2

Design		
Drawn		
Checked		
Approved		
Squad	POE	

ULTIMATE FACILITY TRAFFIC DATA

SHEET 2 OF 2

State Job No. 09032(17) Sheet No. 25

SEPT 08, 2016 - 15:47:19
H:\PROJECTS\2789_CrossRoads_InterX_New\PHASE 1A\Roadway\Drawings\2789-PHASE 1A-TRAFDAT2.DWG

STORM WATER MANAGEMENT PLAN

REVISIONS	
DESCRIPTION	DATE

SITE DESCRIPTION

PROJECT LIMITS: I-240/I-35 INTERCHANGE RECONSTRUCTION - PHASE IA

PROJECT DESCRIPTION: GRADING, DRAINAGE, SURFACING AND EROSION CONTROL PLANS FOR APPROX. 1700' OF 2 LANE CONSTRUCTION OF RE-ALIGNED I-240 EASTBOUND LANES FROM APPROX. 900' EAST OF SHIELDS BLVD. EASTERLY., PROPOSED SW SERVICE ROAD REALIGNMENT FROM SHIELDS BLVD. EAST/SOUTH TO S.W. 82ND ST.

SUGGESTED SEQUENCE OF EROSION CONTROL ACTIVITIES: PRIOR TO INITIATED SOIL DISTURBING ACTIVITIES, THE CONTRACTOR WILL INSTALL A PERIMETER TEMPORARY SEDIMENT CONTROLS SPECIFIED. STRIP AND STOCKPILE AND STABILIZE TOPSOIL. CLEAR AND GRUB ONLY IN NECESSARY AREAS PRESERVING AS MUCH NATIVE VEGETATION AS POSSIBLE. INSTALL, MAINTAIN AND/OR MOVE TEMPORARY SEDIMENT ITEMS WITH CONSTRUCTION OPERATIONS AS PRACTICAL. REPLACE SALVAGED TOPSOIL AND DEVICES WHEN AN ACCEPTABLE VEGETATIVE COVER (AT LEAST 70%) HAS BEEN ATTAINED. AS SITE CONDITIONS WARRANT, THE CONTRACTOR MAY CHOOSE TO MODIFY THE TYPE OR ARRANGEMENT OF SPECIFIED PRACTICES TO IMPROVE THEIR EFFECTIVENESS AS APPROVED BY THE ENGINEER. THE CONTRACTOR WILL MAINTAIN A LOG OF THE DATES OF MAJOR SOIL DISTURBANCE ACTIVITIES, AND ALSO THE DATES OF INSTALLATION OF EROSION CONTROL MEASURES.

SOIL TYPE: SANDY LOAM

AREA TO BE DISTURBED: 23.5 ACRES

OFFSITE AREA TO BE DISTURBED: (FOR CONTRACTOR USE) _____

MAXIMUM ACRES TO BE DISTURBED AT ANY ONE TIME: (FOR CONTRACTOR USE) _____

LATITUDE & LONGITUDE OF CENTER OF PROJECT: 35°23'29.43" N 97°29'53.44" W

NAME OF RECEIVING WATERS: UNNAMED TRIBUTARY OF LIGHTENING CREEK

SENSITIVE WATERS OR WATERSHEDS: YES ☐ NO ☒

303(d) IMPAIRED WATERS: YES ☐ NO ☒

NOTE:
THIS SHEET SHOULD BE USED IN CONJUNCTION WITH A DRAINAGE MAP THAT ILLUSTRATES THE DRAINAGE PATTERNS/PATHWAYS AND RECEIVING WATERS FOR THIS PROJECT. THIS SHEET SHOULD ALSO BE USED WITH THE EROSION CONTROL SUMMARIES, PAY ITEMS, & NOTES.

EROSION AND SEDIMENT CONTROLS

SOIL STABILIZATION PRACTICES:

- _____ TEMPORARY SEEDING
- __X__ PERMANENT SODDING, SPRIGGING OR SEEDING
- __X__ VEGETATIVE MULCHING
- _____ SOIL RETENTION BLANKET
- _____ PRESERVATION OF EXISTING VEGETATION

NOTE: TEMPORARY EROSION CONTROL METHODS MUST BE USED ON ALL DISTURBED AREAS WHERE CONSTRUCTION ACTIVITIES HAVE CEASED FOR OVER 14 DAYS. METHODS USED WILL BE AS SHOWN ON PLANS, OR AS DIRECTED BY THE ENGINEER.

STRUCTURAL PRACTICES:

- __X__ STABILIZED CONSTRUCTION EXIT
- __X__ TEMPORARY SILT FENCE
- __X__ TEMPORARY SILT DIKES
- __X__ TEMPORARY FIBER LOG
- _____ DIVERSION, INTERCEPTOR OR PERIMETER DIKES
- _____ DIVERSION, INTERCEPTOR OR PERIMETER SWALES
- __X__ ROCK FILTER DAMS
- _____ TEMPORARY SLOPE DRAIN
- __X__ PAVED DITCH W/ DITCH LINER PROTECTION
- _____ TEMPORARY DIVERSION CHANNELS
- _____ TEMPORARY SEDIMENT BASINS
- _____ TEMPORARY SEDIMENT TRAPS
- __X__ TEMPORARY SEDIMENT FILTERS
- __X__ TEMPORARY SEDIMENT REMOVAL
- __X__ RIP RAP
- __X__ INLET SEDIMENT FILTER
- _____ TEMPORARY BRUSH SEDIMENT BARRIERS
- _____ SANDBAG BERMS
- _____ TEMPORARY STREAM CROSSINGS

OFFSITE VEHICLE TRACKING:

- __X__ HAUL ROADS DAMPENED FOR DUST CONTROL
- __X__ LOADED HAUL TRUCKS TO BE COVERED WITH TARPAULIN
- __X__ EXCESS DIRT ON ROAD REMOVED DAILY

NOTES:

-

THE CONTRACTOR SHALL ALSO BE RESPONSIBLE FOR THE FOLLOWING:

MAINTENANCE AND INSPECTION:

ALL EROSION AND SEDIMENT CONTROLS WILL BE MAINTAINED IN GOOD WORKING ORDER FROM THE BEGINNING OF CONSTRUCTION UNTIL AN ACCEPTABLE VEGETATIVE COVER IS ESTABLISHED. INSPECTION BY THE CONTRACTOR AND ANY NECESSARY REPAIRS SHALL BE PERFORMED ONCE EVERY 7 CALENDAR DAYS AND WITHIN 24 HOURS AFTER ANY STORM EVENT GREATER THAN 0.5 INCH AS RECORDED BY A NON-FREEZING RAIN GAUGE TO BE LOCATED ON SITE. POTENTIALLY ERODIBLE AREAS, DRAINAGEWAYS, MATERIAL STORAGE, STRUCTURAL DEVICES, CONSTRUCTION ENTRANCES AND EXITS ALONG WITH EROSION AND SEDIMENT CONTROL LOCATIONS ARE EXAMPLES OF SITES THAT NEED TO BE INSPECTED.

WASTE MATERIALS:

PROPER MANAGEMENT AND DISPOSAL OF CONSTRUCTION WASTE MATERIAL IS REQUIRED BY THE CONTRACTOR. MATERIALS INCLUDE STOCKPILES, SURPLUS, DEBRIS AND ALL OTHER BY-PRODUCTS FROM THE CONSTRUCTION PROCESS. PRACTICES INCLUDE DISPOSAL, PROPER MATERIALS HANDLING, SPILL PREVENTION AND CLEANUP MEASURES. CONTROLS AND PRACTICES SHALL MEET THE REQUIREMENTS OF ALL FEDERAL, STATE AND LOCAL AGENCIES.

HAZARDOUS MATERIALS:

PROPER MANAGEMENT AND DISPOSAL OF HAZARDOUS WASTE MATERIALS IS REQUIRED. THE CONTRACTOR IS RESPONSIBLE FOR FOLLOWING MANUFACTURER'S RECOMMENDATIONS, STATE AND FEDERAL REGULATIONS TO ENSURE CORRECT HANDLING, DISPOSAL, SPILL PREVENTION AND CLEANUP MEASURES. EXAMPLES INCLUDE BUT ARE NOT LIMITED TO: PAINTS, ACIDS, CLEANING SOLVENTS, CHEMICAL ADDITIVES, CONCRETE CURING COMPOUNDS AND CONTAMINATED SOILS.

GENERAL NOTES:

A STORM WATER POLLUTION PREVENTION PLAN (SWPPP) IS REQUIRED TO COMPLY WITH THE OKLAHOMA POLLUTION DISCHARGE ELIMINATION SYSTEM (OPDES) REGULATIONS. THIS PLAN IS INITIATED DURING THE DESIGN PHASE, CONFIRMED IN THE PRE-WORK MEETINGS AND AVAILABLE ON THE JOB SITE ALONG WITH COPIES OF THE NOTICE OF INTENT (NOI) FORM AND PERMIT CERTIFICATE THAT HAVE BEEN FILED WITH THE OKLAHOMA DEPARTMENT OF ENVIRONMENTAL QUALITY (ODEQ). THE PLAN MUST BE KEPT CURRENT WITH UP-TO-DATE AMENDMENTS DURING THE PROGRESSION OF THE PROJECT. ALL CONTRACTOR OFF-SITE OPERATIONS ASSOCIATED WITH THE PROJECT MUST BE DOCUMENTED IN THE SWPPP, I.E., BORROW PITS, WORK ROADS, DISPOSAL SITES, ASPHALT/CONCRETE PLANTS, ETC. THE BASIC GOAL OF STORM WATER MANAGEMENT IS TO IMPROVE WATER QUALITY BY REDUCING POLLUTANTS IN STORM WATER DISCHARGES. RUNOFF FROM CONSTRUCTION SITES HAS A POTENTIAL FOR POLLUTION DUE TO EXPOSED SOILS AND THE PRESENCE OF HAZARDOUS MATERIALS USED IN THE CONSTRUCTION PROCESS. THE PREVENTION OF SOIL EROSION, CONTAINMENT OF HAZARDOUS MATERIALS AND/OR THE INTERCEPTION OF THESE POLLUTANTS BEFORE LEAVING THE CONSTRUCTION SITE ARE THE BEST PRACTICES FOR CONTROLLING STORM WATER POLLUTION.

THE FOLLOWING SECTIONS OF THE 2009 ODOT STANDARD SPECIFICATIONS SHOULD BE NOTED:

103.05 BONDING REQUIREMENTS
104.10 FINAL CLEANING UP
104.12 CONTRACTOR'S RESPONSIBILITY FOR WORK
104.13 ENVIRONMENTAL PROTECTION
106.08 STORAGE AND HANDLING OF MATERIAL
107.01 LAWS, RULES AND REGULATIONS TO BE OBSERVED
107.20 STORM WATER MANAGEMENT
220 MANAGEMENT OF EROSION, SEDIMENTATION AND STORM WATER POLLUTION PREVENTION AND CONTROL
221 TEMPORARY SEDIMENT CONTROL

IN ADDITION:

"ODEQ GENERAL PERMIT (OKR10) FOR STORM WATER DISCHARGES FROM CONSTRUCTION ACTIVITIES WITHIN THE STATE OF OKLAHOMA." ODEQ, WATER QUALITY DIVISION, SEPTEMBER 13, 2012.

Design			OKLAHOMA DEPARTMENT OF TRANSPORTATION ROADWAY DESIGN DRAWING
Drawn			STORM WATER MANAGEMENT PLAN
Checked			
Approved			
Squad			

County OKLAHOMA Highway I-240 State Job No. 09032(17) SHEET NO 26

SEPT 08, 2016 - 11:48:45
H:\PROJECTS\2789_CrossRoads_InterX_New\PHASE IA\Roadway\Drawings\2789-PHASE1A-SWMP.DWG

REVISED 04/01/2015

REVISIONS	
DESCRIPTION	DATE

RECEIVING WATERS: UNNAMED TRIBUTARY OF LIGHTNING CREEK

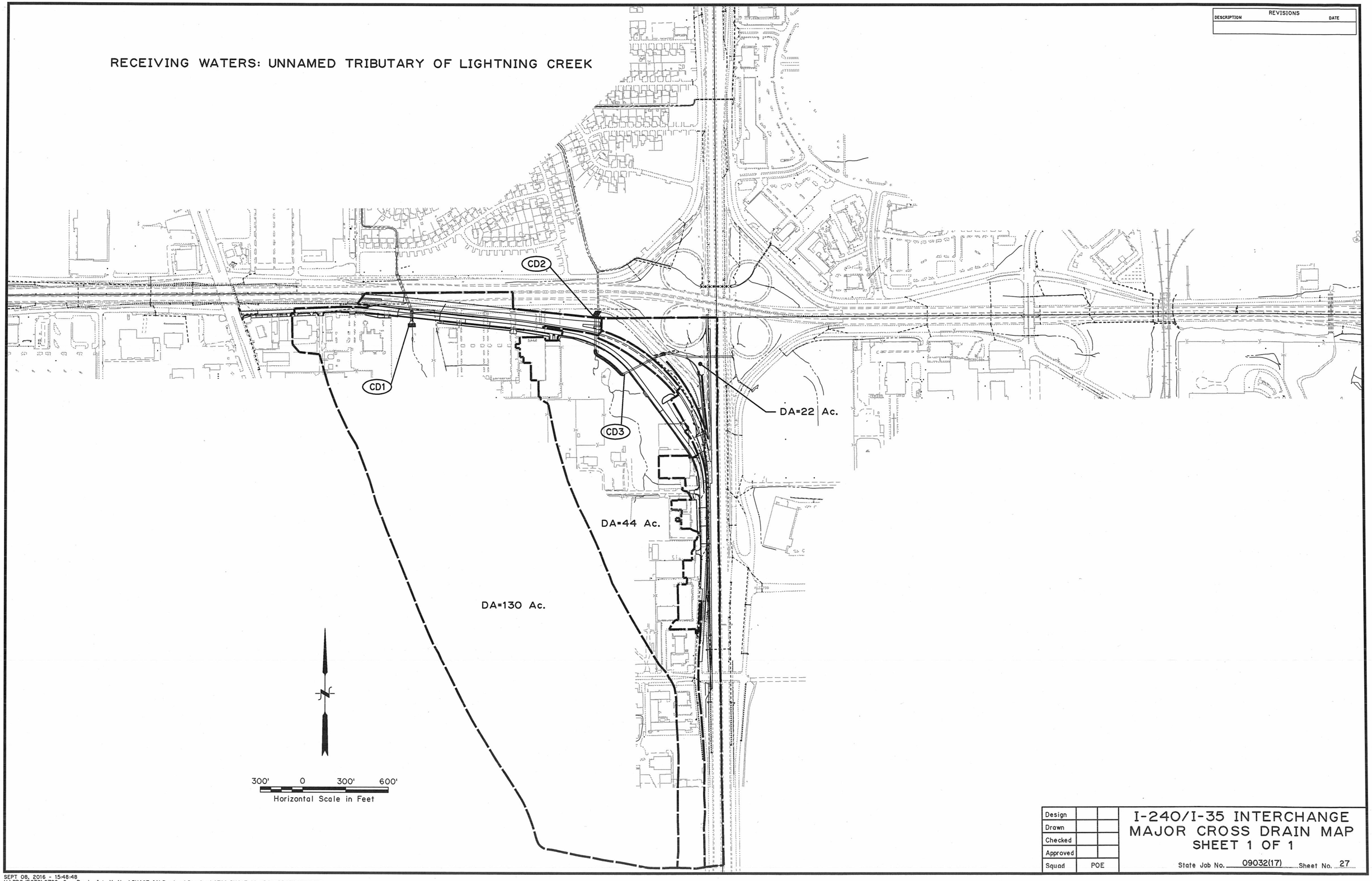

Design		
Drawn		
Checked		
Approved		
Squad	POE	

I-240/I-35 INTERCHANGE
MAJOR CROSS DRAIN MAP
SHEET 1 OF 1

State Job No. 09032(17) Sheet No. 27

SEPT 08, 2016 - 15:48:48
H:\PROJECTS\2789_CrossRoads_InterX_New\PHASE IA\Roadway\Drawings\2789-PHASE 1A CROSSDRAIN-MAP.DWG

REVISIONS	
DESCRIPTION	DATE

RECEIVING WATERS: UNNAMED TRIBUTARY OF LIGHTNING CREEK

SHIELDS BLVD.

BYERS AVE.

72ND ST.

395

400

405

50' 0 50' 100'
Horizontal Scale in Feet

MATCHLINE

I-240

MATCHLINE A

DA=0.25 Ac.

DA=0.99 Ac.

DA=0.07 Ac.

DA=0.6 Ac.

DA=0.89 Ac.

DA=1.2 Ac.

DA=1.16 Ac.

DA=0.27 Ac.

DA=0.05 Ac.

DA=0.14 Ac.

DA=0.13 Ac.

1

2

G27

SW46

SW47

SW48

SW49

SW51

SW52

SW53

SW54

SW55

CD1

Design		
Drawn		
Checked		
Approved		
Squad	POE	

I-240/I-35 INTERCHANGE DRAINAGE MAP SHEET 1 OF 4

State Job No. 09032(17) Sheet No. 28

SEPT 08, 2016 - 15:50:24
H:\PROJECTS\2789_CrossRoads_InterX_New\PHASE IA\Roadway\Drawings\2789-PHASE 1A_DRAINMAP 10F4.DWG

REVISIONS	
DESCRIPTION	DATE

I-240

DA=2.25 Ac.

DA=0.79 Ac.

DA=0.70 Ac.

DA=0.61 Ac.

DA=0.4 Ac.

DA=0.35 Ac.

DA=0.05 Ac.

DA=0.63 Ac.

DA=0.37 Ac.

DA=0.48 Ac.

DA=2.24 Ac.

DA=0.08 Ac.

DA=0.12 Ac.

DA=0.08 Ac.

DA=0.08 Ac.

DA=0.13 Ac.

G10 G24 G25 G26

SW26 SW28 SW29 SW32 SW34 SW35 SW37 SW38 SW40 SW41 SW43 SW44

CD2

MATCHLINE A

MATCHLINE B

W.E. 1272.4

50' 0 50' 100'

Horizontal Scale in Feet

RECEIVING WATERS: UNNAMED TRIBUTARY OF LIGHTNING CREEK

Design		
Drawn		
Checked		
Approved		
Squad	POE	

I-240/I-35 INTERCHANGE DRAINAGE MAP SHEET 2 OF 4

State Job No. 09032(17) Sheet No. 29

SEPT 08, 2016 - 15:50:36
H:\PROJECTS\2789_CrossRoads_InterX_New\PHASE 1A\Roadway\Drawings\2789-PHASE 1A_DRAINMAP 2OF4.DWG

REVISIONS	
DESCRIPTION	DATE

I-35

BM "I" 1290.53

DA=0.03 Ac.

DA=0.15 Ac.

DA=0.28 Ac.

DA=0.24 Ac.

DA=0.30 Ac.

DA=0.38 Ac.

DA=0.09 Ac.

DA=0.14 Ac.

DA=0.35 Ac.

DA=0.76 Ac.

DA=0.72 Ac.

DA=2.32 Ac.

DA=0.31 Ac.

DA=0.44 Ac.

DA=0.04 Ac.

DA=0.1 Ac.

DA=0.14 Ac.

DA=0.08 Ac.

DA=0.30 Ac.

DA=1.07 Ac.

DA=1.34 Ac.

G18 G35 G23 G15 G14 G13 G12 G11 M1

SW22 SW21 SW18 SW17 SW15 SW13 SW11 SW9 SW8 SW4 SW24 SW20 G28 CD3

MATCHLINE B

MATCHLINE C

RECEIVING WATERS: UNNAMED TRIBUTARY OF LIGHTNING CREEK

50' 0 50' 100'

Horizontal Scale in Feet

Design			I-240/I-35 INTERCHANGE DRAINAGE MAP SHEET 3 OF 4
Drawn			
Checked			
Approved			
Squad	POE		State Job No. 09032(17) Sheet No. 30

SEPT 08, 2016 - 15:50:51
H:\PROJECTS\2789__CrossRoads__InterX__New\PHASE 1A\Roadway\Drawings\2789-PHASE 1A_DRAINMAP 3OF4.DWG

REVISIONS	
DESCRIPTION	DATE

DA=0.12 Ac.

DA=0.35 Ac.

I-35

DA=0.25 Ac.

DA=0.25 Ac.

DA=0.27 Ac.

DA=0.31 Ac.

DA=0.20 Ac.

G9 G37 G8 G7 G6 G2 G1

SW4 SW2 SW1

DA=0.20 Ac.

DA=0.28 Ac.

MATCHLINE C

DA=1.50 Ac.

BM " 1308.4

82ND ST.

50' 0 50' 100'

Horizontal Scale in Feet

RECEIVING WATERS: UNNAMED TRIBUTARY OF LIGHTNING CREEK

Design		
Drawn		
Checked		
Approved		
Squad	POE	

I-240/I-35 INTERCHANGE DRAINAGE MAP SHEET 4 OF 4

State Job No. 09032(17) Sheet No. 31

SEPT 08, 2016 - 15:50:59
H:\PROJECTS\2789__CrossRoads__InterX__New\PHASE IA\Roadway\Drawings\2789-PHASE 1A__DRAINMAP 4OF4.DWG

REVISIONS	
DESCRIPTION	DATE

DRAINAGE STRUCTURE DESIGN RECORD

STRUCTURE NO.	STATION & LOCATION	DESCRIPTION	DESIGN	DESIGN YEAR	DRAINAGE AREA	ANTICIPATED LAND USE	AVG. SLOPE OF WATERSHED	RUNOFF COEFFICIENT (WEIGHTED)	LENGTH OF OVERLAND FLOW	SLOPE OF OVERLAND	LENGTH OF CHANNEL FLOW	SLOPE OF CHANNEL	TIME OF CONCENTRATION	INTENSITY OF DESIGN YEAR "I" (RAINFALL)	DESIGN YEAR DISCHARGE Q_N	DESIGN DISCHARGE BYPASS Q_{BYPASS}	SPREAD	DESIGN TAILWATER	TOP OF COVER OR GRATE	STRUCTURE FLOW LINE	OUTLET FLOW LINE	STRUCTURE SLOPE	MAXIMUM ALLOWABLE HEADWATER	FLOW VELOCITY V_N	CONTROLLING HEADWATER	TYPE OF HYDRAULIC CONTROL
				N	ACRES		%	C	FT.	%	FT.	%	MIN.	IN/HR	CFS	CFS	FT.	FT.				%	ELEV.	FT/SEC	ELEV.	
CD1	BL RAMP G STA. 406+65.46	EXTEND EXIST. 2 - 8' x 4' RCB 75.1' RT. w/ WING WALLS	RCB-C2-8(2-12), SBI-4, DET.	50	130	CM	1.37	0.73	1086	1.78	3085	1.16	28.96	5.24	497			3.93		1264.36	1264.07	0.39	1273.00	10.11	1269.78	
	16.04' RT.		SHTS. 109A-109C																							
CD2	CL I-240 STA. 419+64.43	CONST. 10' x 5' x 235' LG. RCB w/ WING WALLS RT. & STD. CURB LT.	RCB-C1-10(2-14), RCB-E1-H5-0-1,	50	44	CM	1.60	0.73	1027	1.95	1456	1.35	27.33	5.40	518			4.50		1266.37	1265.19	0.50	1280.20	13.97		
	CL		RCB-E1-H5-0-2, SBI-4																						1274.58	
CD3	CL SWSR STA. 76+58.40	CONST. 10' x 4' x 286.5' LG. RCB 57.4' LT. & 229.1' RT. w/ WING WALLS	RCB-C1-10(2-14), RCB-E1-H4-0-1,	50	22	CM	1.53	0.72			3750	1.53	16.78	6.77	347			3.31		1268.69	1267.80	0.31	1281.50	10.81		
	CL		RCB-E1-H4-0-2, SBI-4																						1274.83	
1	CL I-240 STA. 402+75.00	CONST. ILB TYPE 1 DES. 2 w/ 18" x 61.6' LG. RCP TO EXIST. STR. AND REMOVE PLUG	CLB-1, SPI-4	10	0.25	PV	2.37	0.90	100	2.96	118	1.86	5.21	9.75	2.01	0.90	5.72		1266.63	1262.13	1260.91	1.99		5.16		
	71.00' RT.																									
2	CL I-240 STA. 403+46.00	CONST. SMD-TYPE 2 w/ 18" x 9.7' LG. RCP TO STR. 3	SMD-3, SPI-4	50	0.07	PV	2.13	0.90	15	18.20	143	0.45	5.00	9.83	0.62		3.00		1272.55	1269.70	1268.61	11.24		7.59		
	76.14' RT.																									
3	CL I-240 STA. 403+52.00	CONST. 4.0' DIA. MH w/ 18" x 44.3' LG. RCP TO STR. G27	MFC-4, MJB-3, SPI-4	10											0.62				1272.17	1268.61	1266.40	4.50		5.51		
	87.50' RT.																									
SW1	S.W. SERV. RD. STA. 55+70.00	CONST. CI DES. 2(D) ON EXIST 18" RCP	CI-1, SPI-4	10	0.28	PV	2.12	0.95	36	2.14	233	2.12	5.00	7.46	1.75	0.20	7.21		1303.68	1298.62						
	25.00' RT.																									
SW2	S.W. SERV. RD. STA. 58+68.07	CONST. ILB TYPE 1 DES. 2 w/ 18" x 37.0' LG. RCP TO EXIST. INLET	CLB-1, SPI-4	10	0.20	PV	2.11	0.95	35	2.48	295	2.07	5.00	7.46	1.20	0.44	7.97		1297.47	1294.04	1293.85	0.51		3.11		
	27.83' RT.																									
SW3	S.W. SERV. RD. STA. 61+00.00	CONST. 4.0' DIA. MH ON EXIST. 24" RCP	MFC-4, MJB-3	10											18.96				1293.46	1286.63						
	18.33' LT.																									
SW4	S.W. SERV. RD. STA. 61+00.00	CONST. CI DES. 3(D) w/ 18" x 2.9' LG. RCP TO STR. SW3	CI-1, SPI-4	10	1.50	CM	1.54	0.74	70	2.42	547	1.43	8.26	6.61	7.14	1.58	12.47		1292.82	1287.23	1287.13	3.45		10.19		
	13.00' LT																									
SW5	S.W. SERV. RD. STA. 61+71.31	CONST. 24" x 99.3' LG. RCP TO STR. SW6	SPI-4	10											18.96					1282.05	1281.05	1.01		8.10		
	14.66' LT.																									
SW6	S.W. SERV. RD. STA. 62+74.00	CONST. 4.0' DIA. MH w/ 30" x 47.9' LG. RCP TO STR. G11	MFC-4, MJB-3, SPI-4	10											24.87				1291.50	1278.63	1278.15	1.00		8.75		
	18.11' LT.																									
SW7	S.W. SERV. RD. STA. 64+00.00	CONST. 4.0' DIA. MH w/ 18" x 122.0' LG. RCP TO STR. SW6	MFC-4, MJB-3, SPI-4	10											5.91				1291.30	1282.92	1281.55	1.12		6.39		
	22.00' LT.																									
SW8	S.W. SERV. RD. STA. 64+00.00	CONST. CI DES. 3(STD) w/ 18" x 6.5' LG. RCP TO STR. SW7	CI-1, SPI-4	10	0.76	CM	1.54	0.76	160	2.63	292	0.95	8.54	6.55	4.53	0.83	14.62		1289.93	1283.11	1282.92	2.92		8.78		
	13.00' LT.																									
SW9	S.W. SERV. RD. STA. 64+00.00	CONST. ILB TYPE 1 DES. 2 w/ 18" x 38.6' LG. RCP TO STR. SW8	CLB-1, SPI-4	10	0.14	PV	0.90	0.90	96	1.36	154	0.62	6.78	6.97	0.70	0.17	7.39		1289.45	1285.20	1283.11	5.41		6.10		
	26.90' RT.																									
SW10	S.W. SERV. RD. STA. 65+30.00	CONST. 4.0' DIA. MH w/ 18" x 126.4' LG. RCP TO STR. SW7	MFC-4, MJB-3, SPI-4	10											0.70				1290.18	1284.05	1282.92	0.89		7.19		
	22.50' LT.																									
SW11	S.W. SERV. RD. STA. 65+30.00	CONST. ILB TYPE 1 DES. 2 w/ 18" x 50.1' LG. RCP TO STR. SW10	CLB-1, SPI-4	10	0.09	PV	0.87	0.95	31	2.15	127	0.55	5.00	7.46	0.68	0.16	7.30		1288.72	1284.43	1284.05	0.74		3.01		
	30.77' RT.																									
SW12	S.W. SERV. RD. STA. 68+00.00	CONST. 4.0' DIA. MH w/ 18" x 91.6' LG. RCP TO STR. SW14	MFC-4, MJB-3, SPI-4	10											8.30				1287.23	1281.64	1281.14	0.55		5.44		
	22.00' LT.																									
SW13	S.W. SERV. RD. STA. 68+00.00	CONST. CI DES. 2(B) w/ 18" x 6.5' LG. RCP TO STR. SW12	CI-1, SPI-4	10	1.34	PV	0.97	0.95	80.3	0.22	464	1.10	10.19	6.21	8.30	0.69	6.96		1286.20	1281.74	1281.64	1.54		5.44		
	13.00' LT.																									
SW14	S.W. SERV. RD. STA. 69+00.00	CONST. 4.0' DIA. MH w/ 24" x 207.7' LG. RCP TO STR. SW16	MFC-4, MJB-3, SPI-4	10											15.91				1286.95	1280.64	1279.17	0.71		6.79		
	21.90' LT.																									
SW15	S.W. SERV. RD. STA. 69+00.00	CONST. CI DES. 2(STD) w/ 18" x 6.5' LG. RCP TO STR. SW14	CI-1, SPI-4	10	1.07	CM	1.17	0.73	154	1.39	90	0.78	7.86	6.71	4.99	0.93	5.95		1285.57	1281.26	1281.14	1.85		8.21		
	13.00' LT.																									
SW16	S.W. SERV. RD. STA. 71+15.00	CONST. 4.0' DIA. MH w/ 24" x 181.6' LG. RCP TO STR. SW19	MFC-4, MJB-3, SPI-4	10											18.96				1285.28	1279.17	1277.35	1.00		8.06		
	22.00' LT.																									
SW17	S.W. SERV. RD. STA. 71+15.00	CONST. CI DES. 3(STD) w/ 18" x 6.5' LG. RCP TO STR. SW16	CI-1, SPI-4	10	0.44	PV	0.96	0.83	83	2.26	169	0.32	7.29	6.84	3.05	0.35	11.50		1284.99	1279.53	1279.17	5.54		9.50		
	13.00' LT.																									
SW18	S.W. SERV. RD. STA. 72+05.00	CONST. CI DES. 3(STD) w/ 18" x 87.0' LG. RCP TO STR. SW21	CI-1, SPI-4	10	0.31	PV	6.86	0.78	213	8.40	54	0.71	5.79	7.24	1.56	0.11	8.54		1284.42	1278.09	1277.64	0.52		3.37		
	13.00' RT.																									
SW19	S.W. SERV. RD. STA. 73+00.00	CONST. 4.0' DIA. MH w/ 24" x 196.6' LG. RCP TO STR. SW23	MFC-4, MJB-3, SPI-4	10											22.57				1284.41	1273.18	1271.21	1.00		8.21		
	22.00' LT.																									
SW20	S.W. SERV. RD. STA. 73+00.00	CONST. CI DES. 2(STD) w/ 18" x 6.5' LG. RCP TO STR. SW19	CI-1, SPI-4	10	0.08	PV	0.74	0.95	14	2.09	182	0.63	5.00	7.46	0.76	0.15	7.01		1283.82	1277.52	1277.42	1.54		6.31		
	13.00' LT.																									
SW21	S.W. SERV. RD. STA. 73+00.00	CONST. CI DES. 2(STD) w/ 18" x 23.4' LG. RCP TO STR. SW20	CI-1, SPI-4	10	0.14	PV	7.56	0.66	43	22.30	92	0.63	5.00	7.46	0.66	0.12	6.62		1283.82	1277.64	1277.52	0.51		6.61		
	13.00' RT.																									
SW22	S.W. SERV. RD. STA. 74+52.00	CONST. CI DES. 2(STD) w/ 18" x 146.7' LG. RCP TO STR. SW21	CI-1, SPI-4	10	0.10	PV	7.35	0.82	53	20.40	147	1.00	5.00	7.46	0.63	0.11	6.49		1282.83	1278.80	1277.64	0.79		3.01		
	13.00' RT.																									

LAND USES	
CM	COMMERCIAL
CV	CULTIVATION
PS	PASTURE
PV	PAVED
RS	RESIDENTIAL
WD	WOODLAND

Design		
Drawn		
Checked		
Approved		
Squad	POE	

DRAINAGE STRUCTURE DESIGN RECORD
SHEET 1 OF 4

State Job No. 09032(17) Sheet No. 32

SEPT 08, 2016 - 14:30:40
H:\PROJECTS\2789_CrossRoads_InterX_New\PHASE 1A\Roadway\Drawings\2789-PHASE 1A_DDR.DWG

REVISIONS	
DESCRIPTION	DATE

DRAINAGE STRUCTURE DESIGN RECORD

STRUCTURE NO.	STATION & LOCATION	DESCRIPTION	DESIGN	DESIGN YEAR	DRAINAGE AREA	ANTICIPATED LAND USE	AVG. SLOPE OF WATERSHED	RUNOFF COEFFICIENT (WEIGHTED)	LENGTH OF OVERLAND FLOW	SLOPE OF OVERLAND	LENGTH OF CHANNEL FLOW	SLOPE OF CHANNEL	TIME OF CONCENTRATION	INTENSITY OF DESIGN YEAR "I" (RAINFALL)	DESIGN YEAR DISCHARGE Qn	DESIGN DISCHARGE BYPASS Qbypass	SPREAD	DESIGN TAILWATER	TOP OF COVER OR GRATE	STRUCTURE FLOW LINE	OUTLET FLOW LINE	STRUCTURE SLOPE	MAXIMUM ALLOWABLE HEADWATER	FLOW VELOCITY Vn	CONTROLLING HEADWATER	TYPE OF HYDRAULIC CONTROL
				N	ACRES		%	C	FT.	%	FT.	%	MIN.	IN/HR	CFS	CFS	FT.	FT.				%	ELEV.	FT/SEC	ELEV.	
SW23	S.W. SERV. RD. STA. 75+00.00	CONST. 4.0' DIA. MH w/ 24" x 155.6' LG. RCP TO STR. CD3	MFC-4, MJB-3, SPI-4	10											23.06				1283.00	1271.21	1269.65	1.00		8.87		
	22.00' LT.																									
SW24	S.W. SERV. RD. STA. 75+00.00	CONST. CI DES. 2(STD) w/ 18" x 6.5' LG. RCP TO STR. SW23	CI-1, SPI-4	10	0.04	PV	0.73	0.95	14	1.18	196	0.69	5.00	7.46	0.49	0.07	5.85		1282.56	1278.29	1278.19	1.54		3.53		
	13.00' LT.																									
SW25	S.W. SERV. RD. STA. 79+00.00	CONST. 4.0' DIA. MH w/ 18" x 63.3' LG. RCP TO STR. CD2	MFC-4, MJB-3, SPI-4	10											2.21				1279.62	1275.06	1269.58	8.66		10.14		
	22.00' LT.																									
SW26	S.W. SERV. RD. STA. 79+00.00	CONST. CI DES. 2(STD) w/ 18" x 6.5' LG. RCP TO STR. SW25	CI-1, SPI-4	10	0.35	PV	0.73	0.95	88	0.66	381	0.74	9.13	6.42	2.21	0.21	4.91		1279.72	1276.66	1276.56	1.54		5.49		
	13.00' LT.																									
SW27	S.W. SERV. RD. STA. 81+46.00	CONST. 4.0' DIA. MH w/ 24" x 162.1' LG. RCP TO STR. CD2	MFC-4, MJB-3, SPI-4	10											14.23				1279.42	1271.30	1268.06	2.00		9.89		
	24.00' LT.																									
SW28	S.W. SERV. RD. STA. 81+46.00	CONST. CI DES. 2(STD) w/ 18" x 8.5' LG. RCP TO STR. SW27	CI-1, SPI-4	50	0.61	CM	1.08	0.80	26	6.90	239	0.45	5.59	9.61	4.89		6.08		1278.64	1274.02	1273.92	1.18		6.21		
	13.00' LT.																									
SW29	S.W. SERV. RD. STA. 82+43.00	CONST. CI DES. 2(STD) w/ 18" x 26.9' LG. RCP TO STR. SW30	CI-1, SPI-4	10	2.24	CM	0.85	0.70	340	1.41	150	0.49	11.43	7.87	9.36		19.80		1279.73	1276.65	1275.84	3.01		10.37		
	55.00' LT.																									
SW30	S.W. SERV. RD. STA. 82+35.00	CONST. 4.0' DIA. MH w/ 18" x 84.5' LG. RCP TO STR. SW27	MFC-4, MJB-3, SPI-4	10											9.36				1280.08	1275.84	1272.21	4.30		11.85		
	27.00' LT.																									
SW31	S.W. SERV. RD. STA. 85+00.00	CONST. 4.0' DIA. MH w/ 18" x 126.7' LG. RCP TO STR. SW33	MFC-4, MJB-3, SPI-4	10											1.93				1278.92	1272.93	1271.58	1.07		4.62		
	22.00' LT.																									
SW32	S.W. SERV. RD. STA. 85+00.00	CONST. CI DES. 3(STD) w/ 18" x 6.5' LG. RCP TO STR. SW31	CI-1, SPI-4	10	0.40	CM	0.68	0.73	27	2.56	260	0.48	6.46	7.06	1.93	0.10	8.34		1277.52	1273.06	1272.93	2.00		5.80		
	13.00' LT.																									
SW33	S.W. SERV. RD. STA. 86+31.00	CONST. 4.0' DIA. MH w/ 18" x 108.5' LG. RCP TO STR. SW36	MFC-4, MJB-3, SPI-4	10											3.83				1278.58	1271.58	1271.04	0.50		4.24		
	22.60' LT.																									
SW34	S.W. SERV. RD. STA. 86+31.00	CONST. CI DES. 3(STD) w/ 18" x 7.2' LG. RCP TO STR. SW33	CI-1, SPI-4	10	0.37	CM	2.60	0.73	132	3.20	46	0.87	5.00	7.46	1.90	0.13	9.76		1277.01	1271.68	1271.58	1.39		5.07		
	13.00' LT.																									
SW35	S.W. SERV. RD. STA. 87+43.00	CONST. CI DES. 2(STD) w/ 18" x 9.1' LG. RCP TO STR. SW36	CI-1, SPI-4	10	0.48	CM	1.01	0.70	233	1.16	89	0.64	9.48	6.35	2.11		8.28		1277.99	1273.53	1273.43	1.10		4.81		
	33.67' LT.																									
SW36	S.W. SERV. RD. STA. 87+43.00	CONST. 4.0' DIA. MH w/ 24" x 170.7' LG. RCP TO STR. SW 39	MFC-4, MJB-3, SPI-4	10											6.87				1277.84	1270.50	1269.69	0.47		4.90		
	22.00' LT.																									
SW37	S.W. SERV. RD. STA. 87+43.00	CONST. CI DES. 2(STD) w/ 18" x 6.5' LG. RCP TO STR. SW36	CI-1, SPI-4	10	0.08	PV	1.98	0.88	20	1.02	109	0.45	5.00	7.46	0.59	0.09	6.67		1276.49	1271.07	1270.97	1.54		4.27		
	13.00' LT.																									
SW38	S.W. SERV. RD. STA. 87+43.00	CONST. CI DES. 2(STD) w/ 18" x 23.4' LG. RCP TO STR. SW37	CI-1, SPI-4	10	0.05	PV	0.66	0.95	21	0.67	97	0.66	5.00	7.46	0.34	0.03	5.31		1276.49	1271.19	1271.07	0.51		3.04		
	13.00' RT.																									
SW39	S.W. SERV. RD. STA. 89+17.00	CONST. 4.0' DIA. MH w/ 24" x 179.8' LG. RCP TO STR. SW42	MFC-4, MJB-3, SPI-4	10											6.84				1276.88	1269.69	1267.22	1.37		7.14		
	22.00' LT.																									
SW40	S.W. SERV. RD. STA. 89+17.00	CONST. CI DES. 2(STD) w/ 18" x 6.5' LG. RCP TO STR. SW39	CI-1, SPI-4	10	0.12	PV	0.58	0.88	13	2.02	171	0.46	5.00	7.46	0.73	0.13	7.29		1275.69	1270.33	1270.23	1.54		4.65		
	13.00' LT.																									
SW41	S.W. SERV. RD. STA. 89+17.00	CONST. CI DES. 2(STD) w/ 18" x 23.4' LG. RCP TO STR. SW40	CI-1, SPI-4	10	0.08	PV	0.58	0.95	13	2.02	171	0.46	5.00	7.46	0.51	0.06	6.25		1275.69	1270.56	1270.33	0.98		3.05		
	13.00' RT.																									
SW42	S.W. SERV. RD. STA. 91+00.00	CONST. 4.0' DIA. MH w/ 24" x 6.6' LG. RCP TO STR. SW43	MFC-4, MJB-3, SPI-4	10											6.84				1275.92	1267.22	1267.12	1.52		7.34		
	22.00' LT.																									
SW43	S.W. SERV. RD. STA. 91+00.00	CONST. CI DES. 2(STD) w/ 36" x 22" x 23.4' LG. RCPA TO STR. SW44	CI-1, SPI-4	10	0.13	PV	0.57	0.90	13	2.02	180	0.46	5.00	7.46	0.73	0.12	7.26		1274.85	1267.12	1266.98	0.60		5.30		
	13.00' LT.																									
SW44	S.W. SERV. RD. STA. 91+00.00	CONST. CI DES. 2(STD) w/ 36" x 22" x 17.4' LG. RCPA TO STR. G32	CI-1, SPI-4	10	0.08	PV	0.57	0.95	13	2.02	180	0.46	5.00	7.46	0.55	0.08	6.49		1274.85	1266.98	1266.60	2.18		8.42		
	13.00' RT.																									
SW45	S.W. SERV. RD. STA. 94+00.00	CONST. 4.0' DIA. MH w/ 24" x 6.6' LG. RCP TO STR. SW46	MFC-4, MJB-3, SPI-4	10											16.24				1273.28	1266.51	1266.41	1.52		9.21		
	22.00' LT.																									
SW46	S.W. SERV. RD. STA. 94+00.00	CONST. CI DES. 2(STD) w/ 24" x 23.4' LG. RCP TO STR. SW47	CI-1, SPI-4	10	0.14	PV	0.77	0.95	17	4.56	297	0.56	5.47	7.33	0.90	0.18	7.94		1273.47	1266.41	1266.18	0.98		7.92		
	13.00' LT.																									
SW47	S.W. SERV. RD. STA. 94+00.00	CONST. CI DES. 2(STD) w/ 24" x 22.2' LG. RCP TO STR. G29	CI-1, SPI-4	10	0.13	PV	0.53	0.95	13	2.02	297	0.46	5.88	7.21	0.82	0.16	7.66		1273.47	1266.18	1264.91	5.72		15.58		
	13.00' RT.																									
SW48	S.W. SERV. RD. STA. 94+80.00	CONST. CI DES. 2(STD) w/ 18" x 74.7' LG. RCP TO STR. SW47	CI-1, SPI-4	50	0.05	PV	0.70	0.95	13	2.02	77	0.47	5.00	7.46	0.54		3.53		1273.10	1270.14	1268.43	2.29		4.53		
	13.00' RT.																									
SW49	S.W. SERV. RD. STA. 95+41.00	CONST. CI DES. 2(STD) w/ 18" x 16.6' LG. RCP TO STR. SW50	CI-1, SPI-4	10	1.16	PV	0.88	0.70	224	1.12	65	0.06	10.64	6.12	4.97		13.81		1274.53	1268.53	1268.36	1.02		5.86		
	41.00' LT.																									
SW50	S.W. SERV. RD. STA. 95+41.00	CONST. 4.0' DIA. MH w/ 24" x 137.6' LG. RCP TO STR. SW45	MFC-4, MJB-3, SPI-4	10											16.24				1274.57	1267.86	1266.51	0.98		7.77		
	22.00' LT.																									
SW51	S.W. SERV. RD. STA. 95+41.00	CONST. CI DES. 3(STD) w/ 18" x 6.5' LG. RCP TO STR. SW50	CI-1, SPI-4	50	0.60	PV	1.47	0.88	29	4.22	246	1.15	5.00	9.83	6.20		11.89		1272.92	1268.46	1268.36	1.54		7.29		
	13.00' LT.																									
SW52	S.W. SERV. RD. STA. 98+00.00	CONST. 4.0' DIA. MH w/ 18" x 252.7' LG. RCP TO STR. SW50	MFC-4, MJB-3, SPI-4	10												5.07			1277.45	1271.42	1268.36	1.21		6.33		
	22.00' LT.																									

LAND USES	
CM	COMMERCIAL
CV	CULTIVATION
PS	PASTURE
PV	PAVED
RS	RESIDENTIAL
WD	WOODLAND

Design		
Drawn		
Checked		
Approved		
Squad	POE	

DRAINAGE STRUCTURE DESIGN RECORD
SHEET 2 OF 4

State Job No. 09032(17) Sheet No. 33

SEPT 08, 2016 - 14:30:40
H:\PROJECTS\2789_CrossRoads_InterX_New\PHASE 1A\Roadway\Drawings\2789-PHASE 1A_DDR.DWG

REVISIONS	
DESCRIPTION	DATE

DRAINAGE STRUCTURE DESIGN RECORD

STRUCTURE NO.	STATION & LOCATION	DESCRIPTION	DESIGN	DESIGN YEAR	DRAINAGE AREA	ANTICIPATED LAND USE	AVG. SLOPE OF WATERSHED	RUNOFF COEFFICIENT (WEIGHTED)	LENGTH OF OVERLAND FLOW	SLOPE OF OVERLAND	LENGTH OF CHANNEL FLOW	SLOPE OF CHANNEL	TIME OF CONCENTRATION	INTENSITY OF DESIGN YEAR "I" (RAINFALL)	DESIGN YEAR DISCHARGE Q_N	DESIGN DISCHARGE BYPASS Q_{BYPASS}	SPREAD	DESIGN TAILWATER	TOP OF COVER OR GRATE	STRUCTURE FLOW LINE	OUTLET FLOW LINE	STRUCTURE SLOPE	MAXIMUM ALLOWABLE HEADWATER	FLOW VELOCITY V_N	CONTROLLING HEADWATER	TYPE OF HYDRAULIC CONTROL
				N	ACRES		%	C	FT.	%	FT.	%	MIN.	IN/HR	CFS	CFS	FT.	FT.				%	ELEV.	FT/SEC	ELEV.	
SW53	S.W. SERV. RD. STA. 98+00.00	CONST. CI DES. 3(STD) w/ 18" x 6.5' LG. RCP TO STR. SW52	CI-1, SPI-4	10	1.20	PV	2.09	0.71	52	2.20	384	2.08	6.66	6.96	5.07	0.88	7.71		1275.98	1271.52	1271.42	1.54		6.91		
	13.00' LT.																									
SW54	S.W. SERV. RD. STA. 103+91.00	CONST. CI DES. 3(B) w/ 18" x 99.5' LG. RCP TO EXIST. MH	CI-1, SPI-4	50	0.89	CM	1.43	0.74	123	2.28	227	0.98	7.74	8.87	5.84		9.49		1278.99	1274.41	1271.43	3.00		10.04		
	13.00' LT.																									
SW55	S.W. SERV. RD. STA. 103+94.00	CONST. CI DES. 3(B) w/ 18" x 23.6' LG. RCP TO STR. SW54	CI-1, SPI-4	50	0.27	PV	0.93	0.90	15	1.60	255	0.90	5.00	9.83	2.41		5.44		1278.99	1274.53	1274.41	0.51		3.75		
	13.00' RT.																									
G1	CL I-35 STA. 52+75.00	CONST. ILB TYPE 1 DES. 2 w/ 18" x 4.4' LG. RCP TO STR. G3	CLB-1, SPI-4	10	0.20	PV	3.11	0.90	86	3.89	127	2.58	5.00	9.83	2.30	0.47	5.33		1287.85	1283.63	1283.53	2.27		5.97		
	68.10' LT.																									
G2	BL RAMP G STA. 446+43.88	CONST. ILB TYPE 1 DES. 2 w/ 18" x 4.5' LG. RCP TO STR. G5	CLB-1, SPI-4	10	0.35	PV	1.95	0.90	95	2.67	187	0.59	5.77	9.54	2.13	0.61	5.78		1285.38	1281.32	1281.22	2.22		6.19		
	12.00' RT.																									
G3	CL-I-35 STA. 52+75.00	CONST. 4.0' DIA. MH w/ 28" x 18" x 186.4' LG. RCPA TO STR. G5	MFC-4, MJB-3, SPI-4	10											15.56				1291.93	1283.08	1281.22	1.00		7.76		
	75.00' LT.																									
G4	CL I-35 STA. 51+55.63	CONST. 24" x 117.7' LG. RCP FROM EXIST. MH TO STR. G3	SPI-4	10											13.73					1284.53	1283.08	1.23		8.17		
	73.70' LT.																									
G5	BL RAMP G STA. 446+44.12	CONST. 4.0' DIA. MH w/ 28" x 18" x 55.5' LG. RCPA TO EXIST. MH	MFC-4, MJB-3, SPI-4	10											17.69				1285.90	1281.22	1280.62	1.08		8.22		
	4.30' RT.																									
G6	BL RAMP G STA. 445+83.98	CONST. ILB TYPE 1 DES. 2 ON EXIST. 18" RCP	CLB-1	10	0.31	PV	1.17	0.90	78	2.39	98	0.20	6.18	9.39	3.60		3.70		1284.83	1280.39						
	12.00' RT.																									
G7	BL RAMP G STA. 444+83.20	CONST. ILB TYPE 1 DES. 2 w/ 18" x 5.9' LG. RCP TO EXIST. MH	CLB-1, SPI-4	10	0.27	PV	1.56	0.90	81	2.58	131	0.92	5.46	9.65	1.72	0.54	5.78		1285.30	1280.74	1280.64	1.69		5.28		
	12.00' RT.																									
G8	BL RAMP G STA. 443+50.00	CONST. ILB TYPE 1 DES. 2 w/ 18" x 3.7' LG. RCP TO STR. G17	CLB-1, SPI-4	10	0.25	PV	1.45	0.90	76	2.42	147	0.94	5.56	9.62	1.58	0.30	5.59		1286.49	1281.51	1281.41	2.70		6.09		
	12.00' RT.																									
G9	BL RAMP G STA. 442+00.00	CONST. ILB TYPE 1 DES. 2 w/ 18" x 3.7' LG. RCP TO STR. G19	CLB-1, SPI-4	10	0.25	PV	1.05	0.90	72	2.39	153	0.43	6.15	9.40	1.37	0.22	5.36		1287.77	1280.55	1280.45	2.70		6.89		
	12.00' RT.																									
G10	CL I-240 STA. 409+00.00	CONST. SMD-TYPE 2 w/ 18" x 71.0' LG. RCP TO STR. G32	SMD-3, SPI-4	50	2.25	CM/PV	0.72	0.75	10	18.00	800	0.50	18.01	6.58	11.12		12.68		1273.00	1270.44	1266.94	4.93		13.05		
	18.20' RT.																									
G11	BL RAMP G STA. 438+34.58	CONST. ILB TYPE 1 DES. 2 w/ 30" x 6.2' LG. RCP TO EXIST. MH	CLB-1, SPI-4	10	0.35	PV	1.01	0.90	72	2.34	213	0.55	6.55	9.26	2.15	0.45	6.81		1287.31	1278.15	1278.06	1.45		10.76		
	12.00' RT.																									
G12	BL RAMP G STA. 436+10.05	CONST. ILB TYPE 1 DES. 2 w/ 18" x 2.7' LG. RCP TO EXIST. MH	CLB-1, SPI-4	10	0.38	PV	1.30	0.90	75	2.54	222	0.88	6.17	9.39	2.29	0.58	6.55		1285.49	1280.44	1280.34	1.75		7.58		
	9.12' RT.																									
G13	BL RAMP G STA. 434+34.53	CONST. ILB TYPE 1 DES. 2 w/ 18" x 3.3' LG. RCP TO EXIST. MH	CLB-1, SPI-4	10	0.30	PV	1.89	0.90	80	3.71	173	1.06	5.43	9.66	2.04	0.50	6.07		1283.70	1278.58	1278.48	3.03		6.83		
	12.00' RT.																									
G14	BL RAMP G STA. 433+00.00	CONST. ILB TYPE 1 DES. 2 w/ 18" x 5.6' LG. RCP TO STR. G20	CLB-1, SPI-4	10	0.24	PV	2.12	0.90	78	2.86	131	1.68	5.01	9.83	1.85	0.29	4.23		1281.22	1275.27	1275.17	1.79		5.51		
	15.46' RT.																									
G15	BL RAMP G STA. 431+75.00	CONST. ILB TYPE 1 DES. 2 w/ 18" x 11.1' LG. RCP TO STR. G21	CLB-1, SPI-4	10	0.28	PV	2.56	0.90	81	3.65	121	1.82	5.00	9.83	1.89	0.31	4.21		1278.76	1274.65	1274.55	0.90		4.34		
	21.80' RT.																									
G16	BL RAMP G STA. 444+83.17	CONST. 42" x 128.9' LG. RCP FROM EXIST. MH TO STR. G17	SPI-4	10											58.88					1277.14	1276.50	0.50		8.26		
	1.80' RT.																									
G17	BL RAMP G STA. 443+50.00	CONST. 6.0' DIA. MH w/ 42" x 145.2' LG. RCP TO STR. G19	MFC-4, MJB-3, SPI-4	10											60.46				1286.96	1276.50	1275.70	0.55		8.64		
	4.00' RT.																									
G18	BL RAMP G STA. 430+59.00	CONST. ILB TYPE 1 DES. 2 w/ 28" x 18" x 59.3' LG. RCPA TO STR. G22	CLB-1, SPI-4	10	0.15	PV	2.75	0.90	46	5.65	111	1.56	5.00	9.83	1.62		2.30		1277.12	1273.33	1273.04	0.49		4.98		
	30.10' RT.																									
G19	BL RAMP G STA. 442+00.00	CONST. 6.0' DIA. MH w/ 42" x 360.6' LG. RCP TO EXIST. MH	MFC-4, MJB-3, SPI-4	10											62.88				1288.30	1275.70	1273.87	0.51		8.40		
	4.00' RT.																									
G20	BL RAMP G STA. 433+00.00	CONST. 8.0' x 7.0' JUNCT. BOX w/ 60" x 117.5' LG. RCP TO STR. G21	MFC-4, MJB-3, SPI-4, DET.	10											100.74				1281.92	1271.37	1271.08	0.25		7.44		
	4.50' RT.		SHTS. 106-108																							
G21	BL RAMP G STA. 431+75.00	CONST. 8.0' x 7.0' JUNCT. BOX w/ 60" x 117.2' LG. RCP TO STR. G22	MFC-4, MJB-3, SPI-4, DET.	10											102.63				1279.76	1271.08	1270.78	0.26		7.47		
	5.40' RT.		SHTS. 106-108																							
G22	BL RAMP G STA. 430+59.00	CONST. 8.0' x 7.0' JUNCT. BOX w/ 60" x 414.6' LG. RCP TO PCES OUTLET	MFC-4, MJB-3, PCES-4,	10											109.91				1279.05	1270.78	1269.73	0.25		7.44		
	34.00' LT.		SPI-4, DET. SHTS. 106-108																							
G23	BL RAMP G STA. 429+80.31	CONST. CI DES. 2(STD) w/ 18" x 74.8' LG. RCP TO STR. G18	CI-1, SPI-4	50	0.72	PV	7.58	0.81	65	34.23	252	0.70	5.24	9.74	5.66		4.03		1278.21	1273.68	1273.33	0.47		4.51		
	10.00' RT.																									
G24	BL RAMP G STA. 414+25.00	CONST. CI DES. 2(D) w/ 18" x 320.3' LG. RCP TO STR. G31	CI-1, SPI-4	10	0.79	PV	1.21	0.90	42	2.62	574	1.10	7.54	8.93	4.35	0.47	7.55		1276.27	1271.74	1270.06	0.50		4.37		
	10.00' RT.																									
G25	BL RAMP G STA. 411+00.00	CONST. CI DES. 2(B) w/ 18" x 3.5' LG. RCP TO STR. G31	CI-1, SPI-4	10	0.70	PV	0.83	0.90	82	2.12	322	0.51	7.97	8.80	3.98	0.68	8.78		1274.61	1270.16	1270.06	2.86		4.34		
	10.00' RT.																									
G26	BL RAMP G STA. 408+00.00	CONST. CI DES. 2(D) w/ 18" x 3.4' LG. RCP TO STR. G34	CI-1, SPI-4	10	0.63	PV	0.84	0.90	72	2.26	297	0.50	7.51	8.94	4.33	0.10	8.67		1273.25	1268.58	1268.48	2.94		3.55		
	10.00' RT.																									

LAND USES	
CM	COMMERCIAL
CV	CULTIVATION
PS	PASTURE
PV	PAVED
RS	RESIDENTIAL
WD	WOODLAND

Design		
Drawn		
Checked		
Approved		
Squad	POE	

DRAINAGE STRUCTURE DESIGN RECORD
SHEET 3 OF 4

State Job No. 09032(17) Sheet No. 34

SEPT 08, 2016 - 14:30:40
H:\PROJECTS\2789__CrossRoads__InterX__New\PHASE IA\Roadway\Drawings\2789-PHASE 1A_DDR.DWG

REVISIONS		
DESCRIPTION		DATE

DRAINAGE STRUCTURE DESIGN RECORD

STRUCTURE NO.	STATION & LOCATION	DESCRIPTION	DESIGN	DESIGN YEAR	DRAINAGE AREA	ANTICIPATED LAND USE	AVG. SLOPE OF WATERSHED	RUNOFF COEFFICIENT (WEIGHTED)	LENGTH OF OVERLAND FLOW	SLOPE OF OVERLAND	LENGTH OF CHANNEL FLOW	SLOPE OF CHANNEL	TIME OF CONCENTRATION	INTENSITY OF DESIGN YEAR "I" (RAINFALL)	DESIGN YEAR DISCHARGE Qn	DESIGN DISCHARGE BYPASS Qbypass	SPREAD	DESIGN TAILWATER	TOP OF COVER OR GRATE	STRUCTURE FLOW LINE	OUTLET FLOW LINE	STRUCTURE SLOPE	MAXIMUM ALLOWABLE HEADWATER	FLOW VELOCITY Vw	CONTROLLING HEADWATER	TYPE OF HYDRAULIC CONTROL
				N	ACRES		%	C	FT.	%	FT.	%	MIN.	IN/HR	CFS	CFS	FT.	FT.				%	ELEV.	FT/SEC	ELEV.	
G27	BL RAMP G STA. 404+00.00	CONST. CI DES. 3(D) w/ LARGE JUNCTION BOX w/ 18" x 170.7' LG. RCP TO STR. G29	DETAIL SHT. NO. 110, SPI-4	10	0.99	PV	1.24	0.90	72	2.26	397	1.05	7.29	9.01	5.89	0.36	8.21		1269.07	1266.40	1265.41	0.58		5.04		
	10.00' RT.																									
G28	BL RAMP G STA. 423+50.00	CONST. SMD-TYPE 2B w/ 36" x 26.3' LG. RCP TO STR. CD3	SMD-3, SPI-4	50	2.32	PV	2.26	0.90	62	9.45	350	1.00	5.91	9.49	19.84		13.46		1274.50	1268.93	1268.47	1.75		10.07		
	51.70' RT.																									
G29	BL RAMP G STA. 405+70.00	CONST. 4.0' DIA. MH w/ 36" x 22" x 67.6' LG. RCPA TO STR. G30	MFC-4, MJB-3, SPI-4	10											25.01				1271.56	1264.91	1264.57	0.50		6.65		
	15.00' RT.																									
G30	BL RAMP G STA. 406+45.00	CONST. 4.0' DIA. MH w/ 36" x 22" x 5.5' LG. RCPA TO EXIST. RCB	MFC-4, MJB-3, SPI-4	10											25.01				1272.69	1264.57	1264.47	1.82		10.99		
	15.00' RT.																									
G31	BL RAMP G STA. 411+00.00	CONST. 4.0' DIA. MH w/ 24" x 228.7' LG. RCP TO STR. G32	MFC-4, MJB-3, SPI-4	10											8.33				1275.20	1269.56	1266.44	1.36		7.44		
	16.00' RT.																									
G32	BL RAMP G STA. 408+67.12	CONST. 6.0' x 5.0' JUNCT. BOX w/ 43" x 26" x 34.9' LG. RCPA TO STR. G33	MFC-4, MJB-3, SPI-4, DET.	10											26.23				1274.20	1266.27	1266.09	0.52		6.95		
	16.00' RT.		SHTS. 106-108																							
G33	BL RAMP G STA. 408+26.71	CONST. 7.0' x 6.0' JUNCT. BOX w/ 51" x 31" x 20.8' LG. RCPA TO STR. G34	MFC-4, MJB-3, SPI-4, DET.	10											38.60				1274.06	1265.78	1265.67	0.53		7.71		
	16.00' RT.		SHTS. 106-108																							
G34	BL RAMP G STA. 408+00.00	CONST. 7.0' x 6.0' JUNCT. BOX w/ 51" x 31" x 123.6' LG. RCPA TO STR. CD1	MFC-4, MJB-3, SPI-4, DET.	10											42.93				1274.07	1265.67	1265.05	0.50		7.74		
	17.50' RT.		SHTS. 106-108																							
G35	BL RAMP G STA. 430+59.50	CONST. SMD-TYPE 2 w/ 18" x 3.3' LG. RCP TO STR. G36	SMD-3, SPI-4	50	0.03	PV	1.99	0.90	5	27.80	133	1.05	5.00	9.83	0.29		3.44		1286.25	1283.69	1283.59	3.03		3.82		
	35.60' RT.																									
G36	BL RAMP G STA. 430+60.00	CONST. 4.0' DIA. MH w/ 18" x 10.2' LG. RCP TO STR. G18	MFC-4, MJB-3, SPI-4	10											0.29				1288.04	1273.62	1273.33	2.84		3.74		
	42.10' RT.																									
G37	BL RAMP G STA. 442+43.00	CONST. SMD-TYPE 2 w/ 18" x 39.5' LG. RCP TO STR. G38	SMD-3, SPI-4	50	0.12	PV	2.99	0.90	16	6.50	202	2.71	5.00	9.83	1.05		4.03		1295.67	1293.11	1292.87	0.61		3.19		
	17.60' RT.																									
G38	BL RAMP G STA. 442+00.00	CONST. 4.0' DIA. MH w/ 18" x 7.0' LG. RCP TO STR. G9	MFC-4, MJB-3, SPI-4	10											1.05				1296.58	1280.65	1280.55	1.43		4.31		
	21.5' RT.																									
M1	BL RAMP M STA. 430+32.99	CONST. CI DES. 2(STD) w/ 18" x 45.7' LG. RCP TO STR. SW15	CI-1, SPI-4	50	0.30	PV	2.17	0.90	53	4.36	219	1.66	5.00	9.83	2.62		3.90		1287.71	1283.04	1281.34	3.72		7.90		
	15.00' RT.																									

LAND USES	
CM	COMMERCIAL
CV	CULTIVATION
PS	PASTURE
PV	PAVED
RS	RESIDENTIAL
WD	WOODLAND

Design		
Drawn		
Checked		
Approved		
Squad	POE	

DRAINAGE STRUCTURE DESIGN RECORD
SHEET 4 OF 4

State Job No. 09032(17) Sheet No. 35

SEPT 08, 2016 - 14:30:40
H:\PROJECTS\2789_CrossRoads_InterX_New\PHASE 1A\Roadway\Drawings\2789-PHASE 1A_DDR.DWG

SUMMARY OF PAY QUANTITIES (ROADWAY) (0100)

ITEM NO.		DESCRIPTION		UNIT	QUANTITY
104	0300	CONSTRUCTION MISCELLANEOUS	(7)(19)	L.F.	100
201(A)	0102	CLEARING AND GRUBBING	(14)(23)	L.SUM	1
202(A)	0183	UNCLASSIFIED EXCAVATION		C.Y.	57717
202(D)	0184	UNCLASSIFIED BORROW		C.Y.	11287
205(A)	4229	TYPE A-SALVAGED TOPSOIL	(R-5)(R-7)	L.SUM	1
221(C)	2801	TEMPORARY SILT FENCE	(8)(9)	L.F.	6990
221(D)	2803	TEMPORARY SEDIMENT FILTER	(7)(8)(9)	EA.	2
221(F)	0100	TEMPORARY SILT DIKE	(8)(9)	L.F.	280
221(G)	0153	TEMPORARY ROCK FILTER DAM TYPE 4	(8)(9)	C.Y.	13
221(H)	0450	(PL) TEMPORARY INLET SEDIMENT FILTER	(8)(9)	EA.	156
221(K)	0600	TEMPORARY FIBER LOG	(8)(9)	L.F.	2066
230(A)	2806	SOLID SLAB SODDING	(30)(R-7)(R-8)	S.Y.	42396
233(A)	2817	VEGETATIVE MULCHING	(R-11)	AC.	10
241	2832	MOWING	(10)(R-16)	AC.	18
303(A)	2100	AGGREGATE BASE TYPE A	(R-1)	C.Y.	4744
307(K)	4300	STABILIZED SUBGRADE	(6)	S.Y.	44452
317	4270	CEMENT TREATED BASE		S.Y.	32924
325	5271	SEPARATOR FABRIC	(11)	S.Y.	24396
402(E)	0225	TRAFFIC BOUND SURFACE COURSE TYPE E	(24)(R-25)	TON	2538
407(B)	0250	TACK COAT	(28)	GAL.	2914
411(B)	5935	SUPERPAVE, TYPE S3 (PG 76-28 OK)	(R-32)	TON	1529
411(B)	5945	SUPERPAVE, TYPE S3 (PG 64-22 OK)	(R-32)	TON	5151
411(C)	5950	SUPERPAVE, TYPE S4 (PG 76-28 OK)	(R-32)	TON	1118
412	5267	COLD MILLING PAVEMENT	(R-34)	S.Y.	135
414(A)	0210	P.C. CONCRETE PAVEMENT (PLACEMENT)	(R-1)	S.Y.	3608
414(B)	5725	DOWEL JOINTED P.C. CONCRETE PAVEMENT (PLACEMENT)	(R-1)	S.Y.	25717
414(G)	5275	P.C. CONCRETE FOR PAVEMENT	(R-1)	C.Y.	7872
501(A)	0313	STRUCTURAL EXCAVATION UNCLASSIFIED		C.Y.	473
501(G)	6315	CLSM BACKFILL	(7)	C.Y.	10
502	1000	TEMPORARY EARTH RETAINAGE	(25)	L.SUM	1
504(D)	6239	CONCRETE RAIL (TR3)	(26)(R-1)	L.F.	605
504(D)	6245	CONCRETE RAIL (TR4)	(26)(R-1)	L.F.	144
504(E)	6190	42" F-SHAPED PARAPET	(29)	L.F.	2834
508	6335	REMOVAL OF CULVERT END	(31)	EA.	1
509(A)	0319	CLASS AA CONCRETE		C.Y.	850
509(B)	0321	CLASS A CONCRETE	(12)	C.Y.	190
509(B)	0325	CLASS A CONCRETE (LONG. BAR. DES. 1-A)	(R-54)	C.Y.	26
509(C)	0322	CLASS A CONCRETE, SMALL STRUCTURES		C.Y.	50
509(D)	0325	CLASS C CONCRETE	(22)(R-41)	C.Y.	179
510(A)	6334	RETAINING WALL	(21)(27)	S.Y.	183
510(C)	6135	SLOPE WALL (5")		S.Y.	200
510(D)	6341	MSE RETAINING WALL	(20)(21)(27)	S.Y.	1333
511(A)	0332	REINFORCING STEEL	(16)	LBS.	159023
511(B)	4269	EPOXY COATED REINFORCING STEEL	(13)	LBS.	28025
514(A)	6011	PILES, FURNISHED (HP 12 x 53)		L.F.	408
514(B)	6294	PILES, DRIVEN (HP 12 x 53)		L.F.	408
521(A)	6210	PNEUMATICALLY PLACED MORTAR	(32)	S.Y.	2
525(C)	1000	(SP) NEST PREVENTION		L.SUM	1
601(A)	0297	TYPE 1 PLAIN RIPRAP	(33)	TON	2225
609(A)	0287	CONCRETE CURB (4" MNTBLE-INTEGRAL)		L.F.	411
609(A)	0300	CONCRETE CURB (6" BARRIER-INTEGRAL)		L.F.	7572
609(B)	1523	2'-8" COMB.CURB & GUTTER (4" MNTBLE)		L.F.	300
609(B)	1525	2'-8" COMB.CURB & GUTTER (6" BARRIER)		L.F.	1982
610(A)	0602	4" CONCRETE SIDEWALK		S.Y.	2382
610(B)	0604	6" CONCRETE DRIVEWAY		S.Y.	1705
610(C)	0608	4" CONCRETE DIVIDING STRIP		S.Y.	695
610(C)	0609	6" CONCRETE DIVIDING STRIP		S.Y.	110
610(I)	4610	TACTILE WARNING DEVICE-NEW		S.F.	95
611(A)	2657	MANHOLE (4' DIAMETER)	(5)(15)	EA.	28
611(A)	2659	MANHOLE (6' DIAMETER)	(5)(15)	EA.	2
611(G)	5112	INLET CI DES. 2 (STD)	(4)(5)(R-44)	EA.	21
611(G)	5113	INLET CI DES. 2 (B)	(4)(5)(R-44)	EA.	2
611(G)	5115	INLET CI DES. 2 (D)	(4)(5)(R-44)	EA.	3
611(G)	5120	INLET CI DES. 3 (STD)	(4)(5)(R-44)	EA.	7
611(G)	5121	INLET CI DES. 3 (B)	(4)(5)(R-44)	EA.	2
611(G)	5122	INLET CI DES. 3 (D)	(4)(5)(R-44)	EA.	1
611(G)	5699	INLET - LONGITUDINAL BARRIER - TYPE I, DES.2	(4)(5)	EA.	16
611(G)	5886	INLET W/LRG. JCT. BOX, CI, DES. 3 (D)	(4)(5)(R-44)	EA.	1
611(G)	6002	INLET (SMD-TYPE 2)	(5)	EA.	4
611(G)	6006	INLET (SMD-TYPE 2B)	(5)	EA.	1
612(A)	0641	MANHOLES ADJUST TO GRADE	(2)(15)	EA.	5
613(A)	0491	18" R.C.PIPE CLASS III	(1)	L.F.	2663
613(A)	0492	24" R.C.PIPE CLASS III	(1)	L.F.	1847
613(A)	0493	30" R.C.PIPE CLASS III	(1)	L.F.	55
613(A)	0494	36" R.C.PIPE CLASS III	(1)	L.F.	27
613(A)	0495	42" R.C.PIPE CLASS III	(1)	L.F.	635
613(A)	0498	60" R.C.PIPE CLASS III	(1)	L.F.	650

SUMMARY OF PAY QUANTITIES (ROADWAY) (0100)

ITEM NO.		DESCRIPTION		UNIT	QUANTITY
613(A)	4496	28" X 18" R.C.PIPE ARCH CLASS A-III	(1)	L.F.	302
613(A)	4497	36" X 22" R.C.PIPE ARCH CLASS A-III	(1)	L.F.	114
613(A)	4498	43" X 26" R.C.PIPE ARCH CLASS A-III	(1)	L.F.	35
613(A)	4499	51" X 31" R.C.PIPE ARCH CLASS A-III	(1)	L.F.	145
613(J)	5915	EDGE DRAIN CONDUIT-PERFORATED		L.F.	3803
613(K)	5916	EDGE DRAIN OUTLET LATERAL-NONPERFORATED		L.F.	100
613(L)	5742	60" PREFAB. CULVERT END SECTION, ROUND		EA.	1
613(Q)	5946	OUTLET LATERAL HEADWALL	(7)	EA.	1
613(Y)	0100	(PL) VIDEO INSPECTION OF CONDUIT	(18)	L.F.	100
619(A)	0920	REMOVAL OF STRUCTURES & OBSTRUCTIONS	(3)(R-48,R-49,R-50)	L.SUM	1
619(B)	4727	REMOVAL OF CONCRETE PAVEMENT	(R-49, R-50)	S.Y.	7064
619(B)	4728	REMOVAL OF ASPHALT PAVEMENT	(R-49, R-50)	S.Y.	17229
624(E)	4293	FENCE-STYLE CLF (6' HIGH, CLASS B)	(R-52)	L.F.	2820
625(D)	1254	REMOVE AND RECONSTRUCT GUARDRAIL		L.F.	150
627(A)	4317	CONCRETE LONGITUDINAL BARRIER, DESIGN 1	(34)	L.F.	332
627(B)	4410	CONCRETE LONGITUDINAL BARRIER END SECTIONS		EA.	2

SUMMARY OF PAY QUANTITIES (STAKING) (0600)

ITEM NUMBER		DESCRIPTION	UNIT	QUANTITY
642(B)	0096	CONSTRUCTION STAKING LEVEL II	L.SUM	1

SUMMARY OF PAY QUANTITIES (CONSTRUCTION) (0640)

ITEM NUMBER		DESCRIPTION		UNIT	QUANTITY
220	2800	SWPPP DOCUMENTATION AND MANAGEMENT		L.SUM	1
640(A)	1426	FIELD OFFICE	(17)	EA.	1
641	1552	MOBILIZATION		L.SUM	1

PAY QUANTITY NOTES

(R-1) PAYMENT FOR THIS ITEM WILL BE BASED ON PLAN QUANTITY ONLY. SEE SECTION 109.01B OF THE STANDARD SPECIFICATIONS.

(R-5) AN ESTIMATED QUANTITY OF 7614 C.Y. TOPSOIL TO BE RESERVED FOR REPLACEMENT OF APPROXIMATELY 5" ON COMPLETED FORESLOPES, DITCHES, AND BACKSLOPES. THIS QUANTITY IS INCLUDED IN THE EARTHWORK BALANCE. ANY ADDITIONAL EXCAVATION REQUIRED IN CUT SECTIONS TO ALLOW FOR PLACEMENT OF TOPSOIL TO FINAL GRADE, SHALL BE INCLUDED IN THE PRICE BID.

(R-7) FOR TYPE A-SALVAGED TOPSOIL PRICE BID TO INCLUDE COST OF 18-46-0 FERTILIZER, ESTIMATED AT 150 POUNDS PER ACRE, FOR SOLID SLAB SODDING PRICE BID TO INCLUDE COST OF 10-20-10 FERTILIZER, ESTIMATED AT 200 POUNDS PER 1000 S.Y. OF SODDING.

(R-8) FOR SOLID SLAB SODDING PRICE BID TO INCLUDE COST OF WATERING, ESTIMATED AT 40 GALLONS PER S.Y. OF SOLID SLAB SODDING.

(R-11) THE QUANTITIES ESTIMATED FOR TEMPORARY EROSION AND SEDIMENT CONTROL IS 24 ACRES.

(R-15) ESTIMATED AT 150 POUNDS OF 18-46-0 FERTILIZER PER ACRE OF AREA ON WHICH TOPSOIL IS TO BE REPLACED.

(R-16) QUANTITY BASED ON TWO APPLICATIONS.

(R-25) ESTIMATED AT 120 LBS. PER CU. FT.

(R-32) ESTIMATED AT 112 LBS. PER SQ. YD. PER 1" THICK.

(R-34) PRICE BID TO INCLUDE COST OF FOG SEAL, MEETING THE REQUIREMENTS OF SECTION 407 OF THE STANDARD SPECIFICATIONS.

(R-41) QUANTITY INCLUDES AN ESTIMATED 100 C.Y. TO BE USED AS DIRECTED BY THE ENGINEER.

(R-44) PRICE BID TO INCLUDE COST OF 26 -4" MOUNTABLE CURB HOODS, 0 -6" MOUNTABLE CURB HOODS, 98 -6" BARRIER CURB HOODS, 0 -8" BARRIER CURB HOODS.

(R-48) INCLUDES REMOVAL OF ALL EXISTING ROADWAY DRAINAGE STRUCTURES, HEADWALLS (UNLESS OTHERWISE SPECIFIED), INLETS, FENCES, AND OTHER STRUCTURES WITHIN THE RIGHT OF WAY.

(R-49) TO BECOME THE PROPERTY OF AND BE DISPOSED OF BY THE CONTRACTOR IN A MANNER APPROVED BY THE ENGINEER.

(R-50) MATERIALS REMOVED SHALL NOT BE MEASURED FOR PAYMENT UNDER SECTION 202.06 UNCLASSIFIED EXCAVATION.

(R-54) CONCRETE LONGITUDINAL BARRIER TO INCLUDE POST HOLES FITTED WITH GALVANIZED STEEL SLEEVE FOR GLARE DEFLECTOR FENCE, OR THREADED FLANGE.

REVISIONS		
	DESCRIPTION	DATE
1	MODIFIED QUANT / ITEM	09/23/16

PAY ITEM NOTES

(1) PRICE BID SHALL INCLUDE THE COST OF TRENCH EXCAVATION AND STANDARD BEDDING MATERIAL AS SHOWN ON THE SUMMARY OF DRAINAGE STRUCTURES.

(2) PRICE BID FOR THIS ITEM SHALL INCLUDE COST TO ADJUST TO GRADE (COMPLETE) INCLUDING MANHOLE FRAMES AND COVERS (TYPE R), OF THE SIZE SHOWN ON DRAINAGE STRUCTURE & DETAIL SHEETS.

(3) PRICE BID SHALL ALSO INCLUDE, BUT IS NOT LIMITED TO, THE REMOVAL OF CONC. BARRIER, CONCRETE DITCH LINER, CONCRETE FLUMES, STRUCTURES, STORM SEWERS, PIPELINES, SAWING PAVEMENT, DRIVEWAYS, PARKING AREAS, CURB, CONC. CURB & GUTTER, SLOPE WALL, PAVEMENT MARKINGS, FENCING, FOOTINGS, POLES, OVERHEAD AND CANTILEVER SIGN STRUCTURES, BILLBOARDS, GROUND MOUNTED SIGN STRUCTURES AND SHEET METAL SIGNS TO BE PERMANENTLY REMOVED AND ANY OTHER NON-ORGANIC ITEM NOT SPECIFICALLY LISTED AS A REMOVAL PAY ITEM. ITEMS TO BE REMOVED SHOULD BE FIELD VERIFIED AS TO THE EXISTING CONDITION AND POSSIBLE NON-STANDARD REMOVAL OPERATIONS THAT MAY BE REQUIRED. ADDITIONAL ITEMS TO BE INCLUDED IN PRICE BID LISTED BELOW MAY OR MAY NOT BE PRESENT IN ANY SPECIFIED CONDITION.

PARCEL	STATION	IMPROVEMENT
13	82+40 RT 72' CL	CONCRETE SIGN BASE AND POSSIBLE 14'x48'x50' BILLBOARD IF NOT MOVED BEFORE CONSTRUCTION
14	71+40 RT 96' CL	CONCRETE SIGN BASE AND POSSIBLE 14'x48'x40' BILLBOARD IF NOT MOVED BEFORE CONSTRUCTION

(4) INCLUDES 0 TYPE 'A', 106 TYPE 'B' AND 22 TYPE 'C' FRAMES AND GRATES (SEE STD. SSIF-3)

(5) PRICE BID SHALL INCLUDE THE COST OF ANY ADDITIONAL DEPTH AS SHOWN ON THE SUMMARY OF DRAINAGE STRUCTURES.

(6) STABILIZED SUBGRADE WILL BE PAID FOR BY THE SQUARE YARD WITH THE COST TO INCLUDE THE CHEMICAL ADDITIVE AT THE RATE SPECIFIED FOR THE APPROPRIATE SOIL CLASSIFICATION AS SPECIFIED IN THE MOST CURRENT ODOT MATERIALS DIVISION OHD L-50. THE SOILS IN THE TOP 24 INCHES OF THE GRADING SECTION SHALL BE RESTRICTED TO A-3, A-2-4, OR A6 SOILS AS CLASSIFIED ACCORDING TO AASHTO M-145. THESE SOILS SHALL BE FURTHER RESTRICTED TO A MAXIMUM PLASTICITY INDEX OF 18.

(7) THIS IS AN ESTIMATED QUANTITY, LOCATION, IF AND WHERE REQUIRED, TO BE DETERMINED BY THE ENGINEER.

(8) REMOVAL OF ACCUMULATED SEDIMENT SHALL BE INCLUDED IN THE PRICE BID FOR THIS ITEM AND WILL NOT BE MEASURED SEPARATELY FOR PAYMENT.

(9) IF TEMPORARY SILT FENCE, DIKES, SEDIMENT FILTERS OR FIBER LOG ARE DAMAGED, THE CONTRACTOR SHALL REPAIR OR REPLACE SAID ITEMS AS EXPEDITIOUSLY AS POSSIBLE. THE COST SHALL BE INCURRED BY THE CONTRACTOR.

(10) THIS IS AN ESTIMATED QUANTITY, ASSUMING TWO MOWINGS. ACTUAL NUMBER AND LOCATION OF MOWING TO BE DETERMINED BY THE ENGINEER. MOWING SHALL INCLUDE LITTER PICKUP BEFORE AND AFTER EACH MOWING AND STRING TRIMMING AROUND SIGNS & STRUCTURES.

(11) SEPARATOR FABRIC SUITED FOR SUBSURFACE DRAINAGE AND SEPARATOR APPLICATIONS SHALL BE "CONTECH C-70NW" OR COMPARABLE FABRIC MANUFACTURED BY "TENAX", "MIRAFI" OR APPROVED EQUAL.

(12) INCLUDES 192 CU. YDS. TO CONSTRUCT MOMENT SLAB FOR F-SHAPED BARRIER.

(13) INCLUDES 28025 LBS. TO CONSTRUCT MOMENT SLAB FOR F-SHAPED BARRIER (SEE DETAIL)

(14) PRICE BID FOR CLEARING AND GRUBBING SHALL INCLUDE THE REMOVAL OF TREES, VEGETATIVE DEBRIS, AND ANY OTHER ORGANIC ITEMS NOT SPECIFICALLY PAID FOR AS REMOVAL ITEMS.

(15) JUNCTION BOX RISERS AND MANHOLES WITHIN PAVED MEDIANS AND SHOULDERS SHALL BE CONSTRUCTED FLUSH AND AT THE SAME CROSS SLOPE AS THE FINISH PAVEMENT. COVERS SHALL BE THE LOCKING TYPE AS APPROVED BY THE ENGINEER.

(16) INCLUDES 156710 LBS. FOR DRAINAGE STRUCTURES AND 2313 LBS. FOR LONGITUDINAL BARRIER.

(17) FIELD OFFICE IS TO BE EQUIPPED WITH TWO TELECOMMUNICATION PHONE LINES, BOTH LONG DISTANCE RESTRICTED. ONE LINE SHALL BE FOR AN OPERATIONAL TELEPHONE AND THE OTHER SHALL BE DEDICATED TO THE USE OF A FAX MACHINE AND (SITE MANAGER STAND ALONE USE.) IN ADDITION, THE FIELD OFFICE IS TO BE EQUIPPED WITH A WIRELESS INTERNET CONNECTION AND THE CONTRACTOR IS TO PROVIDE THE PROJECT INSPECTOR A CURRENT YEAR MODEL CELLULAR PHONE. ALL COST ASSOCIATED WITH THESE ITEMS INCLUDING MONTHLY CHARGES AND ANY ADDITIONAL FEES OR TELECOMMUNICATIONS RELATED CONTRACT EXPENSES SHALL BE INCLUDED IN THE PRICE BID FOR FIELD OFFICE.

Design		
Drawn		
Checked		
Approved		
Squad	POE	

SUMMARY OF PAY QUANTITIES (ROADWAY)

State Job No. 09032(17) Sheet No. 36

H:\PROJECTS\2789_CrossRoads_InterX_New\PHASE IA\Roadway\Drawings\2789-PHASE 1A-PAYQNT.DWG
SEPT 23, 2016 - 16:00:43

PAY ITEM NOTES (CONT.)

(18) THIS IS AN ESTIMATED QUANTITY TO BE USED AS DIRECTED BY THE ENGINEER. THIS PAY ITEM IS FOR VIDEO INSPECTION OF DRAINAGE CONDUITS AS DIRECTED BY THE ENGINEER. CONTRACTOR SHALL USE A VIDEO SOURCE WITH ADEQUATE LIGHTING TO ENSURE PIPE HAS BEEN CLEANED AND IS UNDAMAGED. THIS VIDEO INSPECTION SHALL INCLUDE EITHER AUDIO OR TEXT INFORMATION ON SCREEN TO DEFINE STRUCTURE LOCATIONS. FORMAT TO BE APPROVED BY THE ENGINEER.

(19) THIS PAY ITEM IS FOR THE RODDING AND CLEANING OUT OF EXISTING DRAINAGE CONDUITS. METHOD IS TO BE APPROVED BY THE ENGINEER. ALL DEBRIS, SEDIMENT, AND OBSTRUCTIONS SHALL BECOME THE PROPERTY OF THE CONTRACTOR.

(20) 2 MECHANICAL STABILIZED EARTH (M.S.E.) WALLS SHALL BE THE RESPONSIBILITY OF THE CONTRACTOR AND SHALL BE DESIGNED BY A REGISTERED PROFESSIONAL ENGINEER IN THE STATE OF OKLAHOMA. TR3 AND TR4 RAIL CONNECTIONS TO COPING SHALL BE DESIGNED FOR TL-2 LOADING ACCORDING TO THE AASHTO LRFD DESIGN SPECIFICATIONS. DESIGN CALCULATIONS AND DRAWINGS SHALL BE SUBMITTED TO ODOT BRIDGE DIVISION FOR APPROVAL PRIOR TO CONSTRUCTION. SEE M.S.E. WALL PLAN AND ELEVATION SHEETS FOR LOCATIONS AND LIMITS, INCLUDING LIMITS OF FORMLINER. SEE SECTION 510.04(E), SECTION 2 OF THE 2009 STANDARD SPECIFICATIONS. ALL COSTS ASSOCIATED IN THE DESIGN AND CONSTRUCTION, AND ANY INCIDENTAL ITEMS FOR M.S.E. WALLS SHALL BE INCLUDED IN THIS PAY ITEM.

(21) PAYMENT FOR THIS ITEM WILL BE BASED ON PLAN QUANTITY. SEE THE 2009 OKLAHOMA STANDARD SPECIFICATIONS FOR HIGHWAY CONSTRUCTION - "PLAN QUANTITIES". SECTION 109.01B.

(22) QUANTITY INCLUDES 79 C.Y. TO BE USED FOR THE CONSTRUCTION OF PAVED DITCHES AS SHOWN ON THE SUMMARY OF PAVED DITCHES.

(23) ANY WASTE EXCAVATION OR OTHER MATERIAL EXISTING ABOVE THE NATURAL GROUND LINE WILL BE REMOVED AS PART OF THE CLEARING AND GRUBBING ITEM AND WILL NOT BE PAID FOR AS UNCLASSIFIED EXCAVATION.

(24) QUANTITY INCLUDE 100 TONS TO BE USED IF AND AS DIRECTED BY THE ENGINEER.

(25) TEMPORARY EARTH RETAINAGE (SHEETING AND SHORING) SHALL BE THE RESPONSIBILITY OF THE CONTRACTOR AND SHALL BE DESIGNED BY A REGISTERED PROFESSIONAL ENGINEER IN THE STATE OF OKLAHOMA. DESIGN CALCULATIONS AND DRAWINGS SHALL BE SUBMITTED TO ODOT BRIDGE DIVISION FOR APPROVAL, PRIOR TO CONSTRUCTION. THE LIMITS OF THE SHEETING AND SHORING ARE TO BE DETERMINED BY THE CONTRACTOR. SEE SECTION 502.04.D OF THE 2009 STANDARD SPECIFICATIONS.

(26) TO BE CONSTRUCTED ON TOP OF MSE WALL "E2" AS A SOLID TR4 RAIL AND ON TOP OF "A" AS A TR3 RAIL WITH OPENINGS TO MATCH THE EXISTING MSE WALL TR3 RAIL CONNECTION TO THE COPING SHALL BE PROVIDED BY THE WALL MANUFACTURER AND PROVIDED IN THE SHOP DRAWINGS.

(27) ALL COST OF CONCRETE WALL TREATMENT INCLUDING FINISHING, FORM LINERS, LABOR, MATERIALS, TOOLS, AND INCIDENTALS NECESSARY TO COMPLETE THE WORK AS SPECIFIED SHALL BE INCLUDED IN THE PRICE BID FOR SQUARE YARDS OF WALL. RETAINING WALL SPECIAL PROVISIONS AND ARCHITECTURAL THEME WITH FORMLINER DETAILS WILL BE SUPPLIED BY ODOT BY MARCH 2017.

(28) ESTIMATED AT 0.075 GAL. PER S.Y.

(29) SLIP FORMING WILL NOT BE AN ALLOWED CONSTRUCTION METHOD.

(30) QUANTITY INCLUDE 500 S.Y. TO BE USED IF AND AS DIRECTED BY THE ENGINEER

(31) ALL COST OF REMOVING AND DISPOSING OF EXISTING WINGWALLS, APRON AND PORTION OF THE R.C. BOX INDICATED AND TREES INHIBITING R.C.B. EXTENSION SHALL BE INCLUDED IN THE PRICE BID FOR "REMOVAL OF CULVERT END". REFER TO SUBSECTION 508.04.G OF THE STANDARD SPECIFICATIONS.

(32) ALL COST OF REPAIRING DETERIORATED AREAS OF CONCRETE AND PATCHING OVER ABANDONED PIPE SHALL BE INCLUDED IN THE PRICE BID FOR "PNEUMATICALLY PLACED MORTAR". THE QUANTITY SHOWN IS APPROXIMATE AND PAYMENT SHOULD BE BASED ON ACTUAL REPAIRS MADE. AS APPROVED BY THE ENGINEER. REFER TO SECTION 521 OF THE STANDARD SPECIFICATIONS.

(33) ESTIMATED AT 160 LBS. PER CU. FT.

(34) PROVIDE 5' WIDE OPENINGS BY 3" TALL EVERY 5'. SEE STD. FSHP-42-2 DETAIL "CONTROL CRACK JOINT LOCATIONS FOR SPANS WITH DRAINS" FOR REFERENCE TO LOCATION OF SLOTS AND CRACK CONTROL JOINTS.

ENVIRONMENTAL NOTES

LATITUDE/LONGITUDE	OCC FACILITY NO./OCC CASE NO.	FACILITY
35.3916, -97.5068	55-08554/064-0831	SHIELDS CONOCO
35.3915, -97.5070	55-08224/064-1702	MOSLEY'S TEXACO

PETROLEUM CONTAMINATION MAY EXIST AT OR NEAR THE REFERENCED LEADING UNDERGROUND STORAGE TANK (LUST) SITES. BASED ON THE AVAILABLE INFORMATION, CONTAMINATION IS NOT EXPECTED TO AFFECT CONSTRUCTION ACTIVITIES, BUT IS STILL POSSIBLE. IN THE EVENT CONTAMINATED SOIL OR GROUNDWATER IS ENCOUNTERED, THE CONTRACTOR SHALL ADHERE TO ODOT'S HAZARDOUS MATERIALS SPECIFICATION 107.15 AND NOTIFY THE RESIDENT ENGINEER, WHO MAY THEN CONTACT THE ENVIRONMENTAL PROGRAMS DIVISION AT (405)521-3026 FOR ASSISTANCE.

SWALLOW NOTE

CLIFF SWALLOWS AND BARN SWALLOWS ARE SMALL COLONIAL NESTING BIRDS PROTECTED BY THE FEDERAL MIGRATORY BIRD TREATY ACT. THESE SPECIES COMMONLY USE BRIDGES AND CULVERTS FOR NESTING. THE NESTING SEASON FOR THE SWALLOWS RUNS FROM APRIL 1 TO AUGUST 31. SWALLOW USE CULVERTS AT CL I-240 STA. 406+18.83 & STA. 419+85 HAS BEEN OBSERVED DURING THE INITIAL SURVEYS CONDUCTED AS PART OF THE BIOLOGICAL STUDIES IN 2012. SWALLOW USE OF BRIDGE NBI NO. 20559 AND CULVERTS AT CL I-35 STA. 76+00 & LAT 35.390796 LON -97.496302 (UNDER EXISTING EB I-240 TO SB I-35 RAMP) WAS NOT OBSERVED DURING THE INITIAL SURVEYS. SWALLOWS MAY OCCUPY THE BRIDGE IN THE FUTURE NESTING SEASONS. ANY ACTIVITIES WHICH WOULD DESTROY ACTIVE NESTS OR HARM EGGS OR BIRDS WOULD VIOLATE THE MIGRATORY BIRD TREATY ACT. THE RESIDENT ENGINEER WILL EVALUATE THE CONTRACTOR'S PROPOSED WORK METHODS AND CONCLUDE WHETHER THE PROPOSED WORK WOULD HARM THE NESTING BIRDS BEFORE WORK NEAR THE STRUCTURE IS AUTHORIZED. IF THE PROPOSED WORK WILL HARM THE NESTING BIRDS, THE BRIDGE MAY NETTED PRIOR TO APRIL 1 OR THE WORK DELAYED UNTIL THE NESTING SEASON IS COMPLETE. METHODS OTHER THAN NETTING MUST BE PRE-APPROVED BY THE ODOT BIOLOGIST.

GENERAL CONSTRUCTION NOTES (ROADWAY)

THIS PROJECT SHALL BE CONSTRUCTED WITHOUT CLOSING THE EXISTING ROAD TO LOCAL AND THROUGH TRAFFIC. SEE STANDARD SPECIFICATIONS FOR MAINTENANCE OF LOCAL AND THROUGH TRAFFIC.

MAINTENANCE OF THROUGH TRAFFIC INCLUDES THE MAINTENANCE OF THE EXISTING ROAD IN CLOSE PROXIMITY TO THE NEW CONSTRUCTION AS SHOWN ON THE PLANS.

FOR PROJECTS THAT INCLUDE WIDENING AND/OR RESURFACING, THE CONTRACTOR SHALL SCHEDULE OPERATIONS TO MINIMIZE POTENTIAL DROP-OFF HAZARDS AND SHALL SUBMIT A SEQUENCE OF CONSTRUCTION OPERATIONS TO THE RESIDENT ENGINEER FOR APPROVAL BEFORE OPERATIONS BEGIN. ANY PORTION OF THE CONSTRUCTION OPERATIONS, SUCH AS SUPERPAVE LAYING OPERATIONS, EXVABATION FOR PAVEMENT WIDENING, OR EXTENSION OF ROADWAY STRUCTURES, SHALL BE LIMITED TO ONE SIDE AT A TIME, AND THE PROCEDURES OUTLINED IN THE PAVEMENT DROP-OFF TREATMENT STANDARD PDT-1 (LATEST REVISION) SHALL BE IMPLEMENTED. ONLY THAT AMOUNT OF OPEN TRENCH WILL BE ALLOWED THAT CAN BE SURFACED IN 1 (ONE) DAY'S TIME WITHOUT APPROVAL BY THE ENGINEER. LIGHTS, SIGNS AND BARRICADES SHALL BE MOVED AS WORK PROGRESSES.

ALL TREES, BRUSH, AND OTHER DEBRIS THAT MIGHT INTERFERE WITH THE FLOW OF WATER SHALL BE CLEANED OUT TO THE RIGHT-OF-WAY LINE, AT EACH STRUCTURE AND BRIDGE, IN A MANNER APPROVED BY THE ENGINEER. ALL COST TO BE INCLUDED IN OTHER ITEMS OF WORK.

THE CONTRACTOR SHALL PROVIDE ALL TEMPORARY RIGHT-OF-WAY FENCE AS REQUIRED. WHEN THE PORTION OF THE PROJECT THAT REQUIRED THIS FENCE IS COMPLETED, THE TEMPORARY FENCE SHALL BE REMOVED, AND PERMANENT RIGHT-OF-WAY FENCING SHALL BE RESTORED OR INSTALLED IN A MANNER APPROVED BY THE ENGINEER. ALL COST OF TEMPORARY FENCING SHALL BE INCLUDED IN OTHER ITEMS OF WORK.

ALL FLOWLINES THAT ARE TO BE FILLED SHALL BE THOROUGHLY TAMPED BEFORE CONSTRUCTION OR EXTENSION OF DRAINAGE STRUCTURES. ALL COST TO BE INCLUDED IN OTHER ITEMS OF WORK.

IN ORDER TO ALLEVIATE DUST CONDITIONS DURING GRADING OPERATIONS AND BEFORE PAVEMENT WORK IS COMPLETED, THE CONTRACTOR SHALL SPRINKLE GRADING AT INTERVALS APPROVED BY THE ENGINEER. COST OF SPRINKLING TO BE INCLUDED IN PRICE BID FOR OTHER ITEMS OF WORK.

THE CONTRACTOR SHALL NOT WASTE ANY EXCESS EXCAVATION UNTIL ALL PLANNED EMBANKMENTS AND BACKFILLS ARE COMPLETED. EXCESS UNCLASSIFIED EXCAVATION MATERIAL DETERMINED BY THE ENGINEER TO BE SUITABLE FOR BACKFILL SHALL BE USED TO REDUCE ANY UNCLASSIFIED BORROW NEEDED. COST OF SECOND HANDLING SHALL BE INCLUDED IN OTHER ITEMS OF WORK. ANY REMAINING EXCESS EXCAVATION SHALL BECOME THE PROPERTY OF THE CONTRACTOR AND BE DISPOSED OF IN A MANNER APPROVED BY THE ENGINEER.

PRIME COAT SHALL BE APPLIED TO THE SUBGRADE IMMEDIATELY AFTER FINAL COMPACTION AND SHAPING TO RETAIN MOISTURE FOR PROPER CHEMICAL REACTION OF THE SOIL ADDITIVE.

THE CONTRACTOR SHALL KEEP THE OPEN TRENCH DRAINED. COST TO BE INCLUDED IN OTHER ITEMS OF WORK.

VEGETATIVE MULCHING: THE VEGETATIVE MULCH SHALL BE ANCHORED IN ACCORDANCE WITH THE "MULCHING-TILLER METHOD". AS SPECIFIED IN 233.04(B)(1) OF THE STANDARD SPECIFICATIONS.

AREAS ON WHICH SALVAGED TOPSOIL IS TO BE REPLACED SHALL HAVE 18-46-0 FERTILIZER APPLIED, AT THE RATE OF 150 POINDS PER ACRE, JUST PRIOR TO THE REPLACEMENT OF SALVAGED TOPSOIL.

AT THE BEGINNING OF TURFING OPERATIONS, ANY AREAS INCLUDED IN PLANNED QUANTITIES THAT HAVE GROWN A SATISFACTORY VOLUNTEER TURF OF PERENNIAL GRASS, AS DETERMINED BY THE ENGINEER, SHALL BE FERTILIZED AND WATERED AS CALLED FOR ON THE PLANS, BUT SHALL NOT BE SEEDED, SODDED, OR SPRIGGED.

PIPE EDGEDRAIN QUANTITIES ESTIMATED ONLY. LOCATION, IF AND WHERE REQUIRED, TO BE DETERMINED BY THE ENGINEER.

SURFACING OF RETURNS, UNLESS OTHERWISE SHOWN ON THE PLANS, SHALL BE OF THE SAME MATERIAL (BASE AND SURFACE) AS THAT OF THE ABUTTING SHOULDER OF THE MAINLINE. BASE AND SURFACE THICKNESS SHALL BE THE THICKNESS SHOWN ON PLANS.

T.B.S.C. SURFACES SHALL BE SPRINKLED WITH WATER AND ROLLED WITH A PNEUMATIC ROLLER IN A MANNER APPROVED BY THE ENGINEER.

THE ENGINEER SHALL CHECK GRADES AT RAMP TERMINALS AND MAKE ANY ADJUSTMENTS OF THE GRADES AND SUPERELEVATION WHICH ARE REQUIRED TO OBTAIN SMOOTH PROFILES FOR BOTH EDGES OF THE RAMP PAVEMENT CROSS SLOPE BREAKOVER SHALL NOT EXCEED 5% (FIVE PERCENT).

ONLY THE SILICONE SEALANT OPTIONS, FROM STANDARD LECS-4, WILL BE ALLOWED ON THIS PROJECT.

PRIOR TO FINAL ACCEPTANCE, ALL EXPOSED CURB CONCRETE SURFACES SHALL BE CLEANED OF ALL DISCOLORATION SUCH AS ASPHALT STAIN, TIRE MARKS, OR OTHER DISFIGUREMENT.

IN ACCORDANCE WITH THE OKLAHOMA UNDERGROUND FACILITIES DAMAGE PREVENTION ACT THE CONTRACTOR SHALL NOTIFY THE OKLAHOMA ONE-CALL SYSTEM, INC. 48 HOURS PRIOR TO BEGINNING EXCAVATION. OKLAHOMA ONE-CALL SYSTEM, INC. "CALL OKIE" 1-800-522-6543 OR 811.

CONSTRUCTION NOTES

ALL WORK AND/OR MATERIALS NOT CLASSIFIED AS A "CONTRACT PAY ITEM" SHALL BE CONSIDERED INCIDENTAL AND THE COST THEREOF SHALL BE INCLUDED IN THE UNIT PRICE BID FOR ITEMS WHICH ARE CLASSIFIED FOR PAYMENT.

(CAUTION) THE LOCATION OF ALL UTILITIES AS SHOWN ARE APPROXIMATE. DUE TO RELOCATIONS PLANNED OR PRESENTLY UNDER CONSTRUCTION THERE ARE SOME UTILITIES THAT WILL BE RELOCATED AND NOT SHOWN ON THESE PLANS. THE CONTRACTOR SHALL BE RESPONSIBLE FOR ANY DAMAGE TO ALL UTILITIES.

THE CONTRACTOR SHALL BE RESPONSIBLE FOR ANY DAMAGE HE MAY INFLICT TO THE EXISTING UNDERGROUND UTILITIES WITHIN THE PROJECT AREA AS A RESULT OF HIS DIGGING, TRENCHING, BORING, ETC.. PRIOR TO DIGGING NEAR THE UTILITIES, THE CONTRACTOR SHALL CALL FOR A LIST OF ALL UNDER GROUND FACILITIES REGISTERED IN THE AREA OF CONSTRUCTION LISTED WITH THE FOLLOWING AGENCIES:
THE "OKIE" NOTIFICATION CENTER (405) 840-5021 OR 1-800-522-6543.

UNLESS OTHERWISE NOTED ON THE PLANS, HORIZONTAL LOCATIONS OF EX. UTILITIES ARE APPROXIMATE & VERTICAL LOCATIONS OF EX. UTILITIES ARE UNKNOWN.

REVISIONS		
	DESCRIPTION	DATE
2	MODIFIED NOTE	10/10/16

CONSTRUCTION NOTES (CONT.)

THE OWNERS OF UTILITIES LOCATED WITHIN THE LIMITS OF THIS PROJECT ARE:

OG&E
321 N. HARVEY
OKLA. CITY, OK 73102
(405)272-1010

ONG
401 N. HARVEY
OKLA. CITY, OK 73102
(405)551-4000

ODOT
200 N.E. 21ST STREET
OKLA. CITY, OK 73105
(405)521-2661

AT&T
7001 N.W. 23RD ST.
OKLA. CITY, OK 73008
(405)291-3229

THE CITY OF OKLAHOMA CITY
420 W. MAIN ST., SUITE 500
OKLA. CITY, OK 73102
(405)297-3548

INDIAN NATIONS FIBER OPTICS
124 WEST VINITA
SULPHUR, OK 73086
(580)622-4050

DEPTH & LOCATION OF EXISTING UTILITIES SHALL BE FIELD VERIFIED BY THE CONTRACTOR PRIOR TO CONSTRUCTION.

ALL EXISTING MANHOLES, VALVES, FIRE HYDRANTS AND METERS, WHICH ARE NOT BEING RELOCATED OR REMOVED, SHALL BE RESET TO PROPOSED CONDITIONS. ALL ITEMS THAT ARE TO BE REMOVED AND/OR RESET SHALL BE HANDLED WITH CARE. THE CONTRACTOR SHALL BE RESPONSIBLE FOR ANY DAMAGE OCCURRING DURING THESE OPERATIONS.

IN THE EVENT THE EXISTING SECTION LINE ROADS OR PUBLIC ROAD ARE IN ANY WAY DISTURBED AS A RESULT OF THE CONTRACTORS EFFORTS, IT SHALL BE THE RESPONSIBILITY OF SAID CONTRACTOR TO RETURN THE AREA TO ITS ORIGINAL CONDITION WITH NO ADDITIONAL COMPENSATION AS DIRECTED AND TO THE SATISFACTION OF THE ENGINEER.

A CONTRACTOR'S PROGRESS SCHEDULE SHALL BE PREPARED IN ACCORDANCE WITH SECTION 108.03 OF THE 2009 STANDARD SPECIFICATIONS FOR HIGHWAY CONSTRUCTION.

THE CONTRACTOR IS RESPONSIBLE FOR THE PROMPT REPLACEMENT AND/OR REPAIR OF ALL TRAFFIC CONTROL DEVICES AND APPURTENANCES DAMAGED OR DISTURBED DUE TO CONSTRUCTION.

A WORK ZONE PERMIT MUST BE OBTAINED FROM THE TRAFFIC MANAGEMENT DIVISION AT LEAST TWO (2) WORKING DAYS PRIOR TO THE START OF WORK AND/OR PLACING OR REMOVING ANY BARRICADES OR MODIFYING EXISTING TRAFFIC CONTROL DEVICES. CALL (405) 297-2531 TO OBTAIN AN APPLICATION.

THE CONTRACTOR IS RESPONSIBLE FOR THE REMOVAL OF ALL PAVEMENT MARKINGS THAT WILL BE IN CONFLICT WITH THE PROPOSED WORK.

AT ANY JOINTS IN A CONCRETE STRUCTURE, THE CENTER OF THE FIRST REINFORCING BAR PARALLEL TO THAT JOINT SHALL BE A MAXIMUM OF TWO INCHES FROM THE EDGE OF THE CONCRETE.

REMOVED MATERIAL TO BECOME THE PROPERTY OF THE CONTRACTOR AND IT SHALL BE DISPOSED OF IN A MANNER APPROVED BY THE ENGINEER.

ALL BROKEN CONCRETE INCLUDING OLD SIGN FOOTINGS WITH STUBS, WASTE MATERIAL AND DEBRIS SHALL BECOME THE PROPERTY OF THE CONTRACTOR AND SHALL BE REMOVED FROM THE LIMITS OF THE PROJECT AND DISPOSED OF IN AN AREA APPROVED BY THE ENGINEER. NO PAYMENT SHALL BE MADE FOR THE DISPOSAL OF THIS MATERIAL.

EXISTING GRADE LINES AND CROSS SLOPES SHALL BE FIELD VERIFIED. MODIFICATIONS TO THE GRADE LINES AND CROSS SLOPES AS SHOWN ON THE PLANS TO OBTAIN POSITIVE DRAINAGE WILL BE SUBJECT TO THE APPROVAL OF THE ENGINEER.

THE USGS 7.5 MINUTES QUADRANGLE SHEETS INDICATE THE "WATERS OF THE UNITED STATES" AND "WETLANDS" EXIST WITHIN THIS PROJECT AREA. THE ISSUE OF "WATERS OF THE UNITED STATES" AND "WETLANDS" FALLS UNDER THE CORP OF ENGINEERS (COE) TULSA DISTRICT REGULATORY DIVISION. BUT THE CITY IS OBLIGATED TO INSURE THAT ALL NECESSARY STATE AND FEDERAL PERMITS HAVE BEEN OBTAINED. PURSUIT TO 44 CFR 60.3. THEREFORE, THE APPLICANT IS REQUIRED TO SUBMIT DOCUMENTATION FROM THE COE SHOWING COE APPROVAL FOR THE PROPOSED WORK.

CONSTRUCTION ACTIVITIES THAT RESULT IN LAND DISTURBANCE OF EQUAL TO OR GREATER THAN ONE (1) ACRE, OR LESS THAN ONE (1) ACRE IF THEY ARE PART OF A LARGER COMMON PLAN OF DEVELOPMENT OR SALE THAT TOTALS AT LEAST ONE (1) ACRE MUST OBTAIN A PERMIT FROM ODEQ (FORM 605-002A) FOR STORM WATER DISCHARGES FROM CONSTRUCTION ACTIVITIES.

A COPY OF THE EROSION CONTROL SITE PLAN MUST BE ON SITE AT ALL TIMES AND MADE AVAILABLE TO THE INSPECTOR UPON REQUEST.

THE CONTRACTOR SHALL BE RESPONSIBLE FOR THE REPAIR OR REPLACEMENT OF ALL EROSION CONTROL DEVICES DAMAGED DUE TO CONSTRUCTION.

ANY AREA WITHIN THE PROJECT LIMITS DISTURBED BY THE CONTRACTORS CONSTRUCTION ACTIVITIES NOT SPECIFICALLY SHOWN ON THE PLANS i.e. (STAGING AREAS, STORAGE AREAS, HAUL ROADS, ETC.) SHALL BE RESTORED TO ORIGINAL CONDITION AS DIRECTED BY THE ENGINEER. ALL COST TO BE INCLUDED IN OTHER ITEMS.

Design		
Drawn		
Checked		
Approved		
Squad	POE	

GENERAL CONST. NOTES (ROADWAY)

State Job No. 09032(17) Sheet No. 37

OCT 10, 2016 - 11:39:21
H:\PROJECTS\2789_CrossRoads_InterX_New\PHASE 1A\Roadway\Drawings\2789-PHASE 1A-PAYQNT.DWG

REVISIONS		
	DESCRIPTION	DATE
2	MODIFIED NOTE	10/10/16

M.S.E. NOTES

TYPICAL FORM LINER AND CONCRETE FINISH NOTES:

THE EXPOSED CONCRETE SURFACES OF THE RETAINING WALL SYSTEM SHALL HAVE THE FORM LINER SURFACE TREATMENT THAT HAS BEEN PRE-APPROVED BY THE ENGINEER FOR THE AESTHETIC THEME OF THE PROJECT.

THE CONTRACTOR SHALL SUBMIT THE MANUFACTURER'S INSTALLATION INSTRUCTIONS AND PRODUCT DATA FOR THE TEXTURE SURFACE TREATMENTS. SHOP DRAWINGS SHALL INDICATE FORM LINER LAYOUT, RUSTICATION, REVEAL, AND CHAMFER STRIPS. LOCATION OF JOINTS AND FORM TIES SHALL BE INCLUDED. THE CONTRACTOR SHALL PROVIDE THE ENGINEER, FOR HIS APPROVAL, A SAMPLE PANEL OF THE APPROVED FORM LINER SURFACE TREATMENTS. THE SAMPLE PANEL SHALL BE AN 2' x 2' PANEL WITH SURFACE TREATMENTS. FOLLOWING THE APPROVAL OF THE SMALL SAMPLE PANEL,

THE CONTRACTOR SHALL PROVIDE ONE FULL SCALE MOCK-UP PANEL OF THE SURFACE TREATMENT USING PROPOSED MATERIALS, METHODS AND WORKMANSHIP. THE PANELS SHALL BE APPROVED BY THE ENGINEER ON THE SITE. THE MOCK-UP PANELS SHALL BE A MINIMUM OF 50 SQUARE FEET IN SIZE, AND MAY BE INCORPORATED INTO THE ACTUAL WALLS.

THE MOCK-UP PANEL SHALL INCORPORATE THE PROPOSED CONCRETE MIX, FORM WORK, TIES, FORM LINER, FORM RELEASE AGENTS, PLACEMENT RATE, FORM PRESSURES, JOINT SEALER, VIBRATING, AND FORM STRIPPING PRACTICES.

THE MOCK-UPS SHALL BE ACCEPTED BY THE ENGINEER PRIOR TO BEGINNING FORM WORK FOR THE PROJECT. THE ACCEPTED MOCK-UPS WILL BE THE STANDARD FOR TECHNICAL AND AESTHETIC MERIT.

FORM WORK SHALL BE DESIGNED BY THE CONTRACTOR TO COMPLY WITH ALL REQUIREMENTS BY THE FORM LINER MANUFACTURER. THIS INCLUDES, ALL REQUIREMENTS OF THE FORM LINER MANUFACTURER FOR HANDLING AND INSTALLATION OF THE FORM LINERS AS WELL AS THE APPLICATION OF RELEASE AGENTS, PLACEMENT OF CONCRETE, VIBRATING OF CONCRETE, AND REMOVAL OF FORMS SHALL BE FOLLOWED. FORM LINER BUTT JOINT SHALL BE CAREFULLY LINED UP TO PROVIDE A SURFACE FREE FROM VISIBLE SEAM LINES.

GENERAL NOTES FOR M.S.E. WALLS:

MATERIALS, DESIGN, AND METHODS USED IN CONSTRUCTION OF RETAINING WALLS SHALL BE IN ACCORDANCE WITH 2009 OKLAHOMA DEPARTMENT OF TRANSPORTATION STANDARD SPECIFICATIONS FOR HIGHWAY CONSTRUCTION, UNLESS OTHERWISE NOTED.

THE REINFORCED ZONE MATERIALS SHALL EXTEND HORIZONTALLY FROM THE BACK OF THE PANELS TO THE END OF THE EARTH REINFORCEMENTS. THE REINFORCED ZONE MATERIAL SHALL EXTEND VERTICALLY FROM THE TOP OF THE LEVELING PAD TO THE PROPOSED GROUND LINE.

MINIMUM EARTH OR PAVEMENT COVER OF 2.0' SHALL BE PROVIDED FROM THE TOP OF THE LEVELING PAD FINISHED GRADE. LEVELING PADS SHALL BE CONSTRUCTED AT A DEPTH WITH CONSIDERATION GIVEN TO THE PROPOSED TYPICAL SECTION.

STANDARD PRECAST CONCRETE PANELS SHALL HAVE A MAXIMUM PANEL HEIGHT OF SIX (6') FEET AND A MINIMUM PANEL HEIGHT OF FOUR (4') FEET.

AN OPEN JOINT SHALL BE PROVIDED AROUND THE PERIMETER OF THE CONCRETE PANELS. THEN NOMINAL JOINT OPENING SHALL BE BETWEEN ⅜" AND ¾". THE JOINT CONFIGURATION SHALL BE SUCH THAT THE FILTER FABRIC OR PAD MATERIALS ARE NOT EXPOSED AT THE WALL FACE.

PANELS SHALL FOLLOW THE CURVATURE OF THE WALL AS SHOWN IN THE PLANS. A ONE PIECE CORNER PANEL SHALL BE PROVIDED FOR WALL ANGLE CHANGES OF GREATER THAN 30 DEGREES. BUTTING OF CHAMFERED PANELS WILL BE ALLOWED FOR ANGLE CHANGES OF 30 DEGREES OR LESS.

A CONCRETE COPING SHALL BE PROVIDED ALONG THE TOP OF WALLS. THE JOINTS BETWEEN ALL COPING SEGMENTS SHALL BE SEALED TO PREVENT INFILTRATION OF WATER INTO THE RETAINING WALL BACKFILL. SEALING SHALL BE IN ACCORDANCE WITH SECTION 504 OF THE STANDARD SPECIFICATIONS. ALL COST FOR SEALING COPING SEGMENTS SHALL BE INCLUDED IN THE UNIT PRICE BID PER SQ. YARD OF "(PL) M.S.E. RETAINING WALLS". IF CAST-IN-PLACE COPING IS USED, THEN JOINTS SHALL BE PLACED TO COINCIDE WITH PRECAST PANEL JOINTS. THE WALL FACE PANELS SHALL EXTEND UP INTO THE COPING A MINIMUM OF 2 INCHES.

IF COPING IS PRECAST, A SMOOTH LEVEL-UP STRIP SHALL BE PROVIDED ON TOP OF THE PRECAST PANELS PRIOR TO INSTALLATION OF THE COPING. SHIMS MAY BE USED ON TOP OF THE LEVEL-UP STRIP TO FACILITATE ALIGNMENT.

IF EXISTING OR FUTURE STRUCTURES, PIPES, FOUNDATIONS OR GUARDRAIL POSTS WHICH ARE WITHIN REINFORCED SOIL VOLUME INTERFERE WITH THE NORMAL PLACEMENT OF REINFORCING MESH AND SPECIFIC DIRECTION HAS NOT BEEN PROVIDED ON THE PLANS. THE CONTRACTOR SHALL NOTIFY THE ENGINEER TO DETERMINE WHAT SOURCE OF ACTION SHOULD BE TAKEN.

DESIGN NOTES:

MECHANICALLY STABILIZED EARTH (M.S.E.) WALLS SHALL BE THE RESPONSIBILITY OF THE CONTRACTOR AND SHALL BE DESIGNED BY A REGISTERED PROFESSIONAL ENGINEER IN THE STATE OF OKLAHOMA IN ACCORDANCE WITH THE CURRENT EDITION OF THE AASHTO LRFD DESIGN SPECIFICATIONS AND CURRENT INTERIMS. DESIGN CALCULATIONS AND DRAWINGS SHALL BE SUBMITTED TO ODOT BRIDGE DIVISION FOR APPROVAL PRIOR TO CONSTRUCTION.

THERE SHALL BE NO SURCHARGE WITHIN 25 FEET OF THE CREST OF THE TEMPORARY EXCAVATION SLOPE DURING CONSTRUCTION OF THE RETAINING WALLS.

WHERE RECOMMENDED TEMPORARY EXCAVATION SLOPES WOULD RESULT IN RIGHT-OF-WAY ENCROACHMENT, OR FOR THE PURPOSES OF SOIL STABILITY DURING EXCAVATION. TEMPORARY SHORING SHALL BE REQUIRED. AT THE CONTRACTOR'S OPTION AND WITH APPROVAL OF THE ENGINEER, THE TEMPORARY SHORING MAY BE REMOVED A MINIMUM OF 2' BELOW THE GROUND LINE AND LEFT IN PLACE.

CARE SHALL BE TAKEN IN THE DESIGN AND DURING CONSTRUCTION TO DEVELOP AND MAINTAIN RAPID, POSITIVE DRAINAGE AWAY FROM THE RETAINING WALL AREA. WATER SHOULD NOT BE ALLOWED TO POND ADJACENT TO EITHER THE UP SLOPE OR DOWN SLOPE SIDES OF THE RETAINING WALL. PROPER SURFACE DRAINAGE IS NEEDED TO PREVENT WATER FROM FLOWING OVER THE FACE OF THE WALL AND SATURATING EITHER THE FILL BEHIND THE WALL OR THE SUBGRADE SOILS AT THE BASE OF THE WALL.

CONVENTIONAL DE-WATERING METHODS SHOULD BE ADEQUATE FOR TEMPORARY REMOVAL OF ANY GROUNDWATER ENCOUNTERED DURING THE SHALLOW EXCAVATION PROCESS. MORE EXTENSIVE DE-WATERING MAY BE REQUIRED FOR EXCAVATIONS TO REMOVE SOFT SOILS AND/OR IF CONSTRUCTION OCCURS DURING WET PERIODS OF THE YEAR.

DESIGN PARAMETERS FOR M.S.E. RETAINING WALLS:

DESIGN OF THE M.S.E. RETAINING WALLS BACKFILL SHALL BE BASED ON THE FOLLOWING DESIGN PARAMETERS:

MINIMUM UNIT WEIGHT = 120 PCF
MAXIMUM FRICTION ANGLE = 34°
COHESION = 0 PSF

FOR ANALYSIS OF ULTIMATE AND ALLOWABLE BEARING CAPACITY, IF THE WATER IS LOCATED AT OR ABOVE THE LEVELING PAD, A BUOYANT UNIT WEIGHT OF 65 POUNDS PER CUBIC FOOT SHALL BE USED. SEE GEOTECHNICAL REPORTS FOR GROUND WATER ELEVATIONS.

IN ALL AREAS, IT IS RECOMMENDED THE CONTRACTOR REVIEW THE GEOTECHNICAL REPORT AND STABILITY RESULTS IN THE REPORT THAT IS AVAILABLE FOR THE CONTRACTOR'S USE. GLOBAL STABILITY EVALUATION SHALL BE THE RESPONSIBILITY OF THE CONTRACTOR. GEOTECHNICAL TESTING WAS COMPLETED IN ACCORDANCE WITH THE LATEST EDITION OF THE STATE OF OKLAHOMA DEPARTMENT OF TRANSPORTATION SPECIFICATIONS FOR GEOTECHNICAL INVESTIGATION OF BRIDGES AND RELATED STRUCTURES.

PREPARATION OF THE FOUNDATION MATERIAL FOR THE M.S.E. WALLS, WHETHER IN-SITU MATERIAL OR NEW EMBANKMENT MATERIAL, SHALL BE COMPACTED TO NOT LESS THAN 95% OF THE STANDARD DENSITY.

WHERE NEW EMBANKMENT IS NECESSARY, IT SHALL BE PLACED AND COMPACTED IN 6" LIFTS OF LOOSE MATERIALS TO NOT LESS THAN 95% OF THE STANDARD PROCTOR DENSITY. ALL DENSITY TESTS SHALL BE TESTED IN ACCORDANCE TO SECTION 106.03 OF THE 2009 ODOT STANDARD SPECIFICATIONS FOR HIGHWAY CONSTRUCTION.

CONTRACTOR SHALL BE RESPONSIBLE FOR DESIGN OF THE M.S.E. WALLS FOR:

1. INTERNAL STABILITY INCLUDING: TENSILE STRESSES, PULLOUT, FACING CONNECTION, SLIDING ALONG REINFORCEMENT, AND COMPOUND SLOPE STABILITY.
2. LOCAL STABILITY INCLUDING: BULGING AND MAXIMUM UNREINFORCED HEIGHTS.
3. DESIGN THE M.S.E. WALLS TO ACCOUNT FOR DEAD AND LIVE LOADS, SEISMIC LOADS, HORIZONTAL LOADS FROM GUARDRAILS OR BARRIERS, HYDROSTATIC LOADS, AND OTHER LOADS AS APPROPRIATE.
4. DESIGN THE M.S.E. WALL SUCH THAT THE TOE IS AT A DEPTH THAT NO SCOURING OR UNDERMINING WILL OCCUR.
5. DESIGN OF M.S.E. WALL STRAPS OR TIE-BACKS SHALL BE LOCATED BELOW THE PROPOSED F-SHAPED PARAPET AND MOMENT SLABS TO PREVENT CONFLICT. SEE M.S.E. WALL TYPICAL SECTIONS AND DETAILS.
6. GLOBAL STABILITY EVALUATION.
2. 7. TR3 AND TR4 RAIL CONNECTIONS TO M.S.E. WALL COPING SHALL BE DESIGNED FOR AASHTO TL-2 LOADING.

FOR FURTHER DESIGN INFORMATION NOT PROVIDED IN THE PLANS OR GEOTECHNICAL REPORT, REFER TO THE 2009 OKLAHOMA DEPARTMENT OF TRANSPORTATION STANDARD SPECIFICATIONS FOR HIGHWAY CONSTRUCTION.

PAYMENT:

THE PAYMENT FOR M.S.E. RETAINING WALL SHALL BE BASED ON THE SURFACE AREA SHOWN ON THE PLAN AND PROFILE SHEETS FROM THE TOP OF THE RETAINING WALLS TO TOP OF LEVELING PAD NOT TO EXCEED 2 FEET BELOW FINISH GRADE AT FACE OF WALL. NO ADDITIONAL PAYMENT WILL BE ALLOWED FOR VARYING OF THE LEVELING PAD ELEVATION. THE ACTUAL TOPS OF LEVELING PADS SHALL BE DETERMINED BY THE CONTRACTOR TO PROVIDE SUPPORT FOR THE PROPOSED WALL SYSTEM AND SUBMITTED TO THE ENGINEER FOR APPROVAL.

ALL COST INCURRED DURING CONSTRUCTION OF THE M.S.E. RETAINING WALLS SHALL BE INCLUDED IN THE UNIT PRICE BID PER SQUARE YARD OF "M.S.E. RETAINING WALL". THE COST SHALL INCLUDE BUT NOT LIMITED TO: EXCAVATION, BACKFILL, BACKFILL MATERIAL, DRAINAGE SYSTEMS, GEOCOMPOSITES, FILTER FABRICS, PERFORATED AND NON-PERFORATED PIPE, CONCRETE, REINFORCING STEEL, TEMPORARY SHORING, DRIVING SHOES, COPING, EARTH REINFORCEMENT, CONCRETE PANELS, CONCRETE SURFACE FORM LINERS, FINISH, LEVELING PADS, CONCRETE MOW STRIPS, AND ENGINEERING AND ASSOCIATED COSTS.

Design		
Drawn		
Checked		
Approved		
Squad	POE	

M.S.E. RETAINING WALL NOTES

State Job No. 09032(17) Sheet No. 38

OCT 10, 2016 - 11:46:13
H:\PROJECTS\2789_CrossRoads_InterX_New\PHASE 1A\Bridge\CADDrawings\1A RetWalls\PHASE 1A_RETWALL-MSE-NOTES.DWG

REVISIONS		
	DESCRIPTION	DATE
1	MOD. QUANT./DEL. ITEM	9/23/16

0131 SUMMARY OF PAY QUANTITIES (WATERLINE RELOCATION)

OKC STD.	ODOT ITEM NUMBER	DESCRIPTION		UNIT	TOTAL QUANTITY
810	201(A) 0102	CLEARING AND GRUBBING		L.SUM	1
109.09	221(C) 2801	TEMPORARY SILT FENCE	(1)(2)	L.F.	4000
109.09	221(D) 2803	TEMPORARY SEDIMENT FILTER	(1)(2)	EA.	2
109.09	221(H) 0450	(PL) TEMPORARY INLET SEDIMENT FILTER	(1)(2)	EA.	6
840	230(A) 2806	SOLID SLAB SODDING	(R-7)	S.Y.	560
814	414(E) 0225	FULL DEPTH P.C. CONCRETE PATCHING (PLACEMENT ONLY)		S.Y.	54
814	414(G) 5275	P.C. CONCRETE FOR PAVEMENT		C.Y.	14
614	501(G) 6309	CLSM BACKFILL	(3)	C.Y.	88
SPECIAL	600(A) 0100	(PL) AS-BUILT SURVEY	(18)	L.SUM	1
109.08	600(B) 0200	(PL) AUDIO/VIDEO CONSTRUCTION RECORDING	(19)	LSUM	1
816	610(A) 0602	4" CONCRETE SIDEWALK		S.Y.	20
813/817	610(B) 0604	6" CONCRETE DRIVEWAY		S.Y.	3195
505	616(B) 5229	12" POLYVINYL CHLORIDE (PVC) PIPE	(11)	L.F.	2784
510	616(C) 0892	1' COPPER WATER SERVICE PIPE (LONG)		EA.	10
520	616(D) 1070	6" GATE VALVE	(5)	EA.	7
520	616(D) 1100	12" GATE VALVE	(5)	EA.	2
514	616(D) 5910	6" TAP	(7)	EA.	1
514	616(D) 5950	10" TAP	(7)	EA.	1
514	616(D) 6000	12" TAP	(7)	EA.	3
520	616(D) 7023	12" X 12" TAPPING SLEEVE	(6)(7)(9)	EA.	3
520	616(D) 8010	6" X 6" TAPPING SLEEVE	(6)(7)(9)	EA.	1
520	616(D) 8017	10" X 10" TAPPING SLEEVE	(6)(7)(9)	EA.	1
520	616(D) 8050	6" TAPPING VALVE AND BOX	(6)(7)(8)	EA.	1
520	616(D) 8056	10" TAPPING VALVE AND BOX	(6)(7)(8)	EA.	1
520	616(D) 8060	12" TAPPING VALVE AND BOX	(6)(7)(8)	EA.	3
512	616(F) 5208	METER INSTALLATION 1"		EA.	10
516	616(G) 1192	FIRE HYDRANT		EA.	7
516	616(G) 1193	FIRE HYDRANT EXTENTION	(12)	EA.	16
654	616(I) 5266	20" STEEL CASING	(10)	L.F.	319
252	616(J) 0180	BORE AND JACK 20" CASING		L.F.	319
505	616(O) 0500	12" 11 1/4 DEGREE FITTING	(6)(7)	EA.	3
505	616(O) 0530	12" 45 DEGREE FITTING	(6)(7)	EA.	3
505	616(O) 0550	12" 90 DEGREE FITTING	(6)(7)	EA.	10
505	616(R) 0760	12" X 6" REDUCER	(6)(7)	EA.	1
505	616(R) 0780	12" X 10" REDUCER	(6)(7)	EA.	1
505	616(S) 0210	6" PLUG	(6)(7)(13)	EA.	1
505	616(S) 0225	10" PLUG	(6)(7)(14)	EA.	1
505	616(S) 0240	12" PLUG	(6)(7)(15)	EA.	2
505	616(T) 0600	12" X 12" X 6" TEE	(6)(7)	EA.	7
505	616(T) 0620	12" X 12" X 12" TEE	(6)(7)	EA.	2
522	616(V) 0100	HYDROSTATIC PRESSURE TESTING AND DISINFECTION	(16)	L.S.	1
814	619(B) 4727	REMOVAL OF CONCRETE PAVEMENT	(R-49)(F-50)	S.Y.	500
813/817	619(B) 4766	REMOVAL OF CONCRETE DRIVEWAY	(R-49)(F-50)	S.Y.	3,195
816	619(B) 4792	REMOVAL OF SIDEWALK	(R-49)(F-50)	S.Y.	2
516	619(B) 5949	REMOVAL OF FIRE HYDRANT	(R-49)	EA.	6
827	631(A) 0200	(SP) STATIONARY BOLLARD		EA.	12
801	642(B) 0096	CONSTRUCTION STAKING (LEVEL II)		L.SUM	1
802	880(J) 8905	CONSTRUCTION TRAFFIC CONTROL		L.SUM	1

PAY ITEM NOTES

(1) REMOVAL OF ACCUMULATED SEDIMENT SHALL BE INCLUDED IN THE PRICE BID FOR THIS ITEM AND WILL NOT BE MEASURED SEPARATELY FOR PAYMENT.

(2) IF TEMPORARY SILT FENCE, DIKES OR SEDIMENT FILTERS ARE DAMAGED, THE CONTRACTOR SHALL REPAIR OR REPLACE SAID ITEMS AS EXPEDITIOUSLY AS POSSIBLE. THE COST SHALL BE INCURRED BY THE CONTRACTOR.

(3) ESTIMATED QUANTITY TO BE USED TO FILL ABANDONED WATER LINES. SEE NOTE THIS SHEET.

(4) PLUG TO BE USED AS PART OF WATER LINE ABANDONMENT.

(5) PRICE BID TO INCLUDE THE COST OF VALVE BOX.

(6) SEE SECTION 616.05 OF THE ODOT LATEST EDITION OF THE STANDARD SPECIFICATIONS FOR HIGHWAY CONSTRUCTION.

(7) ALL FITTINGS TO BE INSTALLED W/ FITTINGS MEGA-LUG AND CONCRETE THRUST BLOCK AND POLYETHYLENE ENCASEMENT.

(8) VALVES SHALL BE MECHANICAL JOINT.

(9) TAPPING SLEEVE SHALL HAVE MECHANICAL JOINT.

(10) STEEL CASING SHALL HAVE A NOMINAL WALL THICKNESS UNDER THE ROADWAY OF 0.2500 INCHES.

(11) PRICE BID TO INCLUDE THE COST OF ALL TRENCHING, BEDDING/EMBEDMENT AND MATERIALS REQUIRED TO INSTALL THE POLYVINYL PIPE. COST DOES NOT INCLUDE REMOVAL OF EXISTING PAVING AND/OR REPLACEMENT OF EXISTING PAVING.

(12) EACH EXTENTION COMPUTED AT 12". SEE PLAN & PROFILE SHEETS FOR EACH FIRE HYDRANT LOCATION.

(13) PRICE BID TO INCLUDE THE COST OF 1 6" CAP.

(14) PRICE BID TO INCLUDE THE COST OF 1 10" CAP.

(15) PRICE BID TO INCLUDE THE COST OF 2 12" CAP.

(16) PRICE BID TO INCLUDE THE COST OF DECHLORINATION AND DISPOSAL OF NEUTRALIZED CHLORINATED WATER TO ENSURE THAT NO CHLORINATED WATER DRAINS INTO THE GROUND WATER.

(17) PRICE BID TO INCLUDE COST OF VENT PIPES.

PAY ITEM NOTES

(18) THE CONTRACTOR SHALL BE RESPONSIBLE FOR THE GPS 7/16AS-BUILT1/2 SURVEY, FOLLOWING THE COMPLETION OF CONSTRUCTION. FOR EVERY 100' ALONG THE ALIGNMENT OF THE PROJECT, COORDINATES OF THE MANHOLES, MANHOLE RIM ELEVATIONS, MANHOLE INVERT ELEVATIONS, MANHOLE DEPTHS, AND SIMILAR APPURTENANCES. AN AUTOCAD DRAWING AND COORDINATES DATA SHEET SHALL BE SUBMITTED TO THE PROJECT ENGINEER FOR APPROVAL. THIS TASK MUST BE PERFORMED BY A REGISTERED PROFESSIONAL LAND SURVEYOR. DATA SUBMITTED SHALL BE TIED TO OKLAHOMA STATE PLANE COORDINATE

(19) THE CONTRACTOR SHALL BE RESPONSIBLE FOR THE 7/16COLOR AUDIO/VIDEO RECORDING PRE AND POST CONSTRUCTION AS PER THE CITY OF OKLAHOMA CITY STANDARD SPECIFICATIONS FOR CONSTRUCTION OF PUBLIC IMPROVEMENTS: SECTION 109.08 AUDIO-VIDEO RECORDING PRE- AND POST-CONSTRUCTION.

GENERAL CONSTRUCTION NOTES

1 2 ALL CONSTRUCTION SHALL CONFORM TO OKLAHOMA CITY STANDARD SPECIFICATIONS. ALL CONSTRUCTION OF WATER AND SANITARY SEWER SHALL BE IN ACCORDANCE WITH THE CITY OF OKLAHOMA CITY STANDARD SPECIFICATIONS FOR CONSTRUCTION OF PUBLIC IMPROVEMENTS. ALL CONSTRUCTION MATERIALS PERTAINING TO WATER AND SANITARY SEWER SHALL BE APPROVED BY THE CITY OF OKLAHOMA CITY.

COMPACTION OF TRENCH BACKFILL IN PAVED AREAS SHALL BE A MINIMUM OF 95% OF STANDARD PROCTOR DENSITY.

ALL WORK AND/OR MATERIALS NOT CLASSIFIED AS A "CONTRACT PAY ITEM" SHALL BE CONSIDERED INCIDENTAL AND THE COST THEREOF SHALL BE INCLUDED IN THE UNIT PRICE BID FOR ITEMS WHICH ARE CLASSIFIED FOR PAYMENT.

THE CONTRACTOR SHALL BE RESPONSIBLE FOR THE PLACEMENT OR REPAIR OF TRAFFIC CONTROL DEVICES DAMAGED DURING CONSTRUCTION.

THE CONTRACTOR SHALL CONTACT OKLAHOMA CITY TRAFFIC OPERATIONS AT 297-2648 SEVENTY-TWO (72) HOURS PRIOR TO THE START OF CONSTRUCTION FOR TRAFFIC SIGNAL CONDUIT LOCATION.

ALL WORK AND/OR MATERIALS NOT CLASSIFIED AS A "CONTRACT PAY ITEM" SHALL BE CONSIDERED INCIDENTAL AND THE COST THEREOF SHALL BE INCLUDED IN THE UNIT PRICE BID FOR ITEMS WHICH ARE CLASSIFIED FOR PAYMENT.

(CAUTION) THE LOCATION OF ALL UTILITIES AS SHOWN ARE APPROXIMATE. DUE TO RELOCATIONS PLANNED OR PRESENTLY UNDER CONSTRUCTION THERE ARE SOME UTILITIES THAT WILL BE RELOCATED AND NOT SHOWN ON THESE PLANS. THE CONTRACTOR SHALL BE RESPONSIBLE FOR ANY DAMAGE TO ALL UTILITIES.

THE CONTRACTOR SHALL BE RESPONSIBLE FOR ANY DAMAGE HE MAY INFLICT TO THE EXISTING UNDERGROUND UTILITIES WITHIN THE PROJECT AREA AS A RESULT OF HIS DIGGING, TRENCHING, BORING, ETC.. PRIOR TO DIGGING NEAR THE UTILITIES, THE CONTRACTOR SHALL 2 CALL FOR A LIST OF ALL UNDER GROUND FACILITIES REGISTERED IN THE AREA OF CONSTRUCTION LISTED WITH THE FOLLOWING AGENCIES:
1 THE "OKIE" NOTIFICATION CENTER (405) 840-5021 OR 1-800-522-6543.

DEPTH & LOCATION OF EXISTING UTILITIES SHALL BE FIELD VERIFIED BY THE CONTRACTOR PRIOR TO CONSTRUCTION.

ALL CROSSINGS AND PROPOSED TIE-IN LOCATIONS SHALL BE EXCAVATED AHEAD OF CONSTRUCTION TO VERIFY THE FLOWLINE OF EXISTING WATER MAINS.

THE CONTRACTOR SHALL BE RESPONSIBLE FOR THE CONSTRUCTION STAKING. THE STAKING MUST BE DONE BY A REGISTERED PROFESSIONAL LAND SURVEYOR WHICH WILL BE VERIFIED AT PRE-WORK CONFERENCE.

VALVES, HYDRANTS, DUCTILE IRON PIPE AND FITTINGS:

THE AIR RELEASE AND VACUUM VALVE SHALL BE MANUFACTURED BY APCO VALVE & PRIMER CORPORATION, VAL-MATIC VALVE AND MANUFACTURING CORPORATION OR APPROVED EQUAL.

GATE VALVES, BUTTERFLY VALVES, TAPPING VALVES SHALL BE MECHANICAL JOINT AND MANUFACTURED BY AMERICAN CAST IRON PIPE COMPANY, MUELLER CO., U.S. PIPE, PRATT OR APPROVED EQUAL. TAPPING SLEEVE SHALL BE DUCTILE IRON OR STEEL, MECHANICAL JOINT AND SHALL BE MANUFACTURED BY U.S. PIPE, AMERICAN CAST IRON PIPE COMPANY, JCM MODEL 414 OR SMITH BLAIR MODEL 623 AND MODEL 3490 MJ BY POWER SEAL PIPELINE PRODUCTS CORPORATION. ALL STEEL TAPPING SLEEVES MUST HAVE FUSION-BONDED EPOXY COATING AND TYPE 304 STAINLESS STEEL BOLTS AND NUTS.

HYDRANTS SHALL CONFORM TO AWWA STANDARD C502, LATEST REVISION. HYDRANTS SHALL BE AMERICAN DARLING (MODEL 5 1/4 B-84-B), MUELLER CENTURION 200 MODEL A-423, M&H RELIANT MODEL 929 OR U.S. METROPOLITAN.

MEGALUG SHALL BE MANUFACTURED BY EBAA IRON SALES, INC. OR APPROVED EQUAL.

ANY WATER MAIN TEMPORARILY TAKEN OUT OF SERVICE FOR MAKING CONNECTIONS AND INSTALLING PLUGS SHALL BE MADE AT LOW DEMAND TIMES. THE CONTRACTOR SHALL PROVIDE SEVEN DAYS NOTICE FOLLOWED BY THREE DAYS NOTICE TO THE CITY AND THE PROPERTY OWNERS PRIOR TO TAKING ANY WATER MAIN OUT OF SERVICE.

THE CONTRACTOR SHALL BE RESPONSIBLE FOR THE REPAIR OR REPLACEMENT OF ALL EROSION CONTROL DEVICES DAMAGED DUE TO CONSTRUCTION.

A COPY OF THE EROSION CONTROL PLAN MUST BE ON SITE AT ALL TIMES AND MADE AVAILABLE TO THE INSPECTOR UPON REQUEST.

A WORK ZONE PERMIT MUST BE OBTAINED FROM THE TRAFFIC MANAGEMENT DIVISION AT LEAST TWO (2) WORKING DAYS PRIOR TO THE START OF WORK AND/OR PLACING OR REMOVING ANY BARRICADES OR MODIFYING EXISTING TRAFFIC CONTROL DEVICES. CALL (405) 297-2531 TO OBTAIN AN APPLICATION.

CONSTRUCTION ACTIVITIES THAT RESULT IN LAND DISTURBANCE OF EQUAL TO OR GREATER THAN ONE (1) ACRE MUST OBTAIN A PERMIT FROM ODEQ (FORM 605-002a) FOR STORM DISCHARGES FROM CONSTRUCTION ACTIVITIES AND A PERMIT FROM THE CITY OF OKLAHOMA CITY, STORM WATER QUALITY.

PAY QUANTITY NOTES

(R-7) FOR SOLID SLAB SODDING PRICE BID TO INCLUDE COST OF 10-20-10 FERTILIZER. ESTIMATED AT 200 POUNDS PER 1000 SQ. YDS.

(R-49) TO BECOME THE PROPERTY OF AND BE DISPOSED OF BY THE CONTRACTOR IN A MANNER APPROVED BY THE ENGINEER.

(R-50) MATERIALS REMOVED SHALL NOT BE MEASURED FOR PAYMENT UNDER SECTION 202.06 UNCLASSIFIED EXCAVATION.

NOTE: EXISTING WATER LINES THAT ARE NOT ABANDONED AND NOT REMOVED BY EITHER NOTE OR MAINLINE I-35/I-240 CONSTRUCTION SHALL BE FILLED WITH CLSM. THIS DOES NOT INCLUDE ABANDONED LINES ON SIDE/CROSS STREETS OR ANNEYS BEYOND THE CONSTRUCTION EXTENTS OF I-35/I-240 MAINLINE IMPROVEMENTS.

NOTE: CONTRACTOR PERFORMING THIS WORK SHALL BE PRE-QUALIFIED BY THE CITY OF OKLAHOMA CITY.

REGISTERED PROFESSIONAL ENGINEER — RICHARD M. GROTTE — 12168 — OKLAHOMA — 9/23/16

DESIGN	ABC	12/06
DRAWN	ABC	12/06
CHECKED	ABC	12/06
APPROVED	ABC	12/06
SQUAD	POE	

SUMMARY OF PAY QUANTITIES & NOTES (WATER LINE RELOCATION)

STATE JOB NO. 09032(17) SHEET NO. 39

9/28/2016 3:43:43 PM
G:\PROJECTS\203033 OKC WC-0816 & SC-0911 & SC-0959 & SC-0976\UTILITIES\Water\CADDrawings\WATERLINE_GENERAL NOTES_ODOT.dwg

0130 SUMMARY OF PAY QUANTITIES (SANITARY SEWER LINE RELOCATION)

OKC STD.	ODOT ITEM NUMBER	DESCRIPTION		UNIT	TOTAL QUANTITY	
810	201(A) 0102	CLEARING AND GRUBBING		L.SUM	1	
109.09	221(C) 2801	TEMPORARY SILT FENCE	(5)(6)	L.F.	4050	
109.09	221(D) 2803	TEMPORARY SEDIMENT FILTER	(5)(6)	EA.	3	
109.09	221(F) 0100	TEMPORARY SILT DIKE	(5)(6)	L.F.	50	⚠
109.09	221(H) 0450	(PL) TEMPORARY INLET SEDIMENT FILTER	(5)(6)	EA.	2	
840	230(A) 2806	SOLID SLAB SODDING	(R-7)	S.Y.	10600	
313	407(B) 0250	TACK COAT		GAL	121	
301	411 (B) 5935	SUPERPAVE, TYPE S3 (PG. 76-28)	(R-32)	TON	270	
301	411 (C) 5950	SUPERPAVE, TYPE S4 (PG. 76-28)	(R-32)	TON	90	
614	501(G) 6309	CLSM BACKFILL	(4)	C.Y.	215	
SPECIAL	600(A) 0100	(PL) AS-BUILT SURVEY	(8)	L.SUM	1	
109.08	600(B) 0200	(PL) AUDIO/VIDEO CONSTRUCTION RECORDING	(9)	L.SUM	1	
305	609(B) 1513	1'-8" COMB. CURB & GUTTER (6" BARRIER)		L.F.	500	
306	610(B) 0604	6" CONCRETE DRIVEWAY		S.Y.	3195	
626	611(A) 2657	MANHOLE (4 ' DIAMETER)		EA.	5	
626	611(A) 2658	MANHOLE (5 ' DIAMETER)		EA.	9	
626	611(B) 2680	ADD'L DEPTH IN MANHOLE (4 ' DIAMETER)		V.F.	51	
626	611(B) 2681	ADD'L DEPTH IN MANHOLE (5 ' DIAMETER)		V.F.	72	
252	613(U) 0500	BORE AND JACK 20" STEEL CASING		L.F.	304	⚠
252	613(U) 0530	BORE AND JACK 36" STEEL CASING		L.F.	425	⚠
109.08	613(Y) 0100	(PL) VIDIO INSPECTION OF CONDUIT		L.F.	2,927	
610	615(A) 6120	8" POLYVINYL CHLORIDE (PVC) PIPE		L.F.	560	
610	615(A) 6125	12" POLYVINYL CHLORIDE (PVC) PIPE	(3)(7)	L.F.	388	
610	615(A) 6134	24" POLYVINYL CHLORIDE (PVC) PIPE	(3)(7)	L.F.	1,979	
611	615(B) 0300	SANITARY SEWER SERVICE CONNECTION	(3)(7)	EA.	3	
612	615(C) 0300	SANITARY SEWER SERVICE LINE		L.F.	200	
625	615(D) 0400	SEWER LEAKAGE < 24" DIAMETER		L.F.	948	
625	615(D) 0410	SEWER LEAKAGE TEST(> OR = 24" DIAM.)		L.F.	1,979	
623	615(E) 0450	DEFLECTION TEST (< 24" DIAMETER)		L.SUM	1	
623	615(E) 0475	DEFLECTION TEST (> OR = 24' DIAMETER		L.SUM	1	
618	615(F) 0600	SEWER FLOW CONTROL		L.SUM	1	
654	616(I) 5266	20" STEEL CASING	(1) (7)	L.F.	304	
654	616(I) 5282	36" STEEL CASING	(2) (7)	L.F.	559	
813	619(B) 4726	REMOVAL OF CURB AND GUTTER	(R-49)(R-50)	L.F.	500	⚠
648	619(B) 4742	REMOVAL OF MANHOLES	(10) (R-49)	EA.	3	
813	619(B) 4766	REMOVAL OF CONCRETE DRIVEWAY	(R-49)(R-50)	S.Y.	3,195	
648	619(B) 8660	PLUGGING ABANDONED SEWER		EA.	5	
109.09	624(E) 4292	FENCE-STYLE CLF (6' HIGH, CLASS A)		L.F.	50	
801	642(B) 0096	CONSTRUCTION STAKING (LEVEL II)		L.SUM	1	⚠
802	880(J) 8905	CONSTRUCTION TRAFFIC CONTROL		L.SUM	1	

PAY QUANTITY NOTES

(R-7) FOR SOLID SLAB SODDING PRICE BID TO INCLUDE COST OF 10-20-10 FERTILIZER. ESTIMATED AT 200 POUNDS PER 1000 SQ. YDS.

(R-28) PRIME COAT SHALL BE APPLIED AT AN ESTIMATED RATE OF 0.35 GAL. PER SQ. YD. WHEN APPLIED TO SUBGRADE. AND 0.25 GAL. PER SQ. YD. WHEN APPLIED TO AGGREGATE BASE. THE ACTUAL CUTBACK PRIME COAT REQUIRED FOR PLACEMENT OPERATIONS WILL BE DETERMINED BY THE CONTRACTOR. AND SHALL CONSIDER THE RESIDUE FROM DISTILLATION PERCENTAGE SHOWN IN SECTION 708.03 OF THE STANDARD SPECIFICATIONS.

(R-32) ESTIMATED AT 112 LBS. PER SQ. YDS. PER 1" THICK

(R-49) TO BECOME THE PROPERTY OF AND BE DISPOSED OF BY THE CONTRACTOR IN A MANNER APPROVED BY THE ENGINEER.

(R-50) MATERIALS REMOVED SHALL NOT BE MEASURED FOR PAYMENT UNDER SECTION 202.06 UNCLASSIFIED EXCAVATION.

NOTE: CONTRACTOR PERFORMING THIS WORK SHALL BE PRE-QUALIFIED BY THE CITY OF OKLAHOMA CITY.

NOTE: EXISTING SANITARY SEWER LINES THAT ARE ABANDONED AND NOT REMOVED BY EITHER NOTE OR ROADWAY CONSTRUCTION SHALL BE FILLED WITH CLSM. THIS DOES NOT INCLUDE ABANDONED LINES ON SIDE/CROSS STREETS OR ALLEYS BEYOND THE CONSTRUCTION EXTENTS OF ROADWAY IMPROVEMENTS.

REVISIONS	
DESCRIPTION	DATE
⚠ MOD. QUANT./DEL. ITEM	9/23/16

PAY ITEM NOTES

(1) PRICE BID INCLUDE COST OF 20" STEEL CASING WITH WALL THICKNESS OF 0.250" (MIN.).

(2) PRICE BID INCLUDE COST OF 36" STEEL CASING WITH WALL THICKNESS OF 0.375" (MIN.).

(3) PRICE BID TO INCLUDED COST OF TRENCHING AND BEDDING/EMBEDMENT MATERIALS.

(4) ESTIMATED QUANTITY TO BE USED TO FILL ABANDONED SANTARY SEWER LINES. SEE NOTE THIS SHEET.

(5) REMOVAL OF ACCUMULATED SEDIMENT SHALL BE INCLUDED IN THE PRICE BID FOR THIS ITEM AND WILL NOT BE MEASURED SEPARATELY FOR PAYMENT.

(6) IF TEMPORARY SILT FENCE, DIKES OR SEDIMENT FILTERS ARE DAMAGED, THE CONTRACTOR SHALL REPAIR OR REPLACE SAID ITEMS AS EXPEDITIOUSLY AS POSSIBLE. THE COST SHALL BE INCURRED BY THE CONTRACTOR.

(7) PRICE BID TO INCLUDE COST OF VENT PIPES

(8) THE CONTRACTOR SHALL BE RESPONSIBLE FOR THE GPS AS-BUILT SURVEY, FOLLOWING THE COMPLETION OF CONSTRUCTION, FOR EVERY 100' ALONG THE ALIGNMENT OF THE PROJECT, COORDINATES OF THE MANHOLES, MANHOLE RIM ELEVATIONS, MANHOLE INVERT ELEVATIONS, MANHOLE DEPTHS, AND SIMILAR APPURTENANCES. AN AUTOCAD DRAWING AND COORDINATES DATA SHEET SHALL BE SUBMITTED TO THE PROJECT ENGINEER FOR APPROVAL. THIS TASK MUST BE PERFORMED BY A REGISTERED PROFESSIONAL LAND SURVEYOR. DATA SUBMITTED SHALL BE TIED TO OKLAHOMA STATE PLANE COORDINATE SYSTEM.

(9) THE CONTRACTOR SHALL BE RESPONSIBLE FOR THE COLOR AUDIO/VIDEO RECORDING PRE AND POST CONSTRUCTION AS PER THE CITY OF OKLAHOMA CITY STANDARD SPECIFICATIONS FOR CONSTRUCTION OF PUBLIC IMPROVEMENTS: SECTION 109.08 AUDIO-VIDEO RECORDING PRE- AND POST-CONSTRUCTION.

(10) PRICE BID TO INCLUDE THE COST OF ABANDONING FOR (4) MANHOLES. SEE OKLAHOMA CITY STANDARDS.

GENERAL CONSTRUCTION NOTES

ALL CONSTRUCTION OF WATER AND SANITARY SEWER SHALL BE IN ACCORDANCE WITH THE CITY OF OKLAHOMA CITY STANDARD SPECIFICATIONS FOR CONSTRUCTION OF PUBLIC IMPROVEMENTS. ALL CONSTRUCTION MATERIALS PERTAINING TO WATER AND SANITARY SEWER SHALL BE APPROVED BY THE CITY OF OKLAHOMA CITY.

THE CONTRACTOR SHALL KEEP THE OPEN TRENCH DRAINED. COST TO BE INCLUDED IN OTHER ITEMS OF WORK.

NO PAYMENT WILL BE MADE FOR THE REMOVAL OF ABANDONED UTILITY PIPE LINES THAT INTERFERE WITH CONSTRUCTION. ALL COST TO BE INCLUDED IN OTHER ITEMS.

ALL WORK AND/OR MATERIALS NOT CLASSIFIED AS A "CONTRACT PAY ITEM" SHALL BE CONSIDERED INCIDENTAL AND THE COST THEREOF SHALL BE INCLUDED IN THE UNIT PRICE BID FOR ITEMS WHICH ARE CLASSIFIED FOR PAYMENT.

(CAUTION) THE LOCATION OF ALL UTILITIES AS SHOWN ARE APPROXIMATE. DUE TO RELOCATIONS PLANNED OR PRESENTLY UNDER CONSTRUCTION THERE ARE SOME UTILITIES THAT WILL BE RELOCATED AND NOT SHOWN ON THESE PLANS. THE CONTRACTOR SHALL BE RESPONSIBLE FOR ANY DAMAGE TO ALL UTILITIES.

THE CONTRACTOR SHALL BE RESPONSIBLE FOR ANY DAMAGE HE MAY INFLICT TO THE EXISTING UNDERGROUND UTILITIES WITHIN THE PROJECT AREA AS A RESULT OF HIS DIGGING, TRENCHING, BORING, ETC,. PRIOR TO DIGGING NEAR THE UTILITIES, THE CONTRACTOR SHALL CALL FOR A LIST OF ALL UNDER GROUND FACILITIES REGISTERED IN THE AREA OF CONSTRUCTION LISTED WITH THE FOLLOWING AGENCIES: THE "OKIE" NOTIFICATION CENTER (405) 840-5021 OR 1-800-522-6543.

DEPTH & LOCATION OF EXISTING UTILITIES SHALL BE FIELD VERIFIED BY THE CONTRACTOR PRIOR TO CONSTRUCTION.

IN THE EVENT THE EXISTING SECTION LINE ROADS OR PUBLIC ROAD ARE IN ANY WAY DISTURBED AS A RESULT OF THE CONTRACTORS EFFORTS, IT SHALL BE THE RESPONSIBILITY OF SAID CONTRACTOR TO RETURN THE AREA TO ITS ORIGINAL CONDITION WITH NO ADDITIONAL COMPENSATION AS DIRECTED AND TO THE SATISFACTION OF THE ENGINEER.

A CONTRACTOR'S PROGRESS SCHEDULE SHALL BE PREPARED IN ACCORDANCE WITH SECTION 108A OF THE LATEST EDITION OF THE STANDARD SPECIFICATIONS FOR HIGHWAY CONSTRUCTION.

ALL MATERIAL REMOVED SHALL BECOME THE PROPERTY OF THE CONTRACTOR AND SHALL BE DISPOSED OF IN A MANNER APPROVED BY THE ENGINEER.

REGISTERED PROFESSIONAL ENGINEER
RICHARD M. GROTTE
12168
OKLAHOMA
9/23/16

DESIGN	ABC	12/06
DRAWN	ABC	12/06
CHECKED	ABC	12/06
APPROVED	ABC	12/06
SQUAD	POE	

SUMMARY OF PAY QUANTITIES & NOTES (SANITARY SEWER LINE RELOCATION)

STATE JOB NO. 09032(17) SHEET NO. 40

9/28/2016 3:47:36 PM
G:\PROJECTS\203033 OKC WC-0816 & SC-0911 & SC-0959 & SC-0976\Utilities\Sewer\CADDRAWINGS\PHASE 1A-SC0976\CADDRAWINGS\QUANT-SANSEWER AND NOTES.dwg

REVISIONS		
NO.	DESCRIPTION	DATE

PAY QUANTITY NOTES

(TP-1) PAYMENT FOR THIS ITEM WILL BE BASED ON PLAN QUANTITY. SEE THE 2009 SPECIFICATIONS FOR HIGHWAY CONSTRUCTION.

(TS-24) QUANTITY SHOWN INCLUDES 2,384 L.F. TRAFFIC STRIPE (MULTI-POLYMER) (WHITE) AND 994 L.F. TRAFFIC STRIPE (MULTI-POLYMER) (YELLOW) AND WILL BE MEASURED BY THE LINEAR FOOT OF FOUR INCH (4")WIDE TRAFFIC STRIPE.

(TS-25) QUANTITY SHOWN INCLUDES 8,090 L.F. TRAFFIC STRIPE (MULTI-POLYMER) (WHITE) AND 2,816 L.F. TRAFFIC STRIPE (MULTI-POLYMER) (YELLOW) AND 907 L.F. TRAFFIC STRIPE (MULTI-POLYMER) (BLACK) AND WILL BE MEASURED BY THE LINEAR FOOT OF SIX INCH (6") WIDE TRAFFIC STRIPE.

(TS-26) QUANTITY SHOWN INCLUDES 2,466 L.F. TRAFFIC STRIPE (MULTI-POLYMER) (WHITE) AND 0 L.F. TRAFFIC STRIPE (MULTI-POLYMER) (YELLOW) AND WILL BE MEASURED BY THE LINEAR FOOT OF EIGHT INCH (8")WIDE TRAFFIC STRIPE.

(TS-27) QUANTITY SHOWN INCLUDES 453 L.F. TRAFFIC STRIPE (MULTI-POLYMER) (WHITE) AND 0 L.F. TRAFFIC STRIPE (MULTI-POLYMER) (YELLOW) AND WILL BE MEASURED BY THE LINEAR FOOT OF TWELVE INCH (12")WIDE TRAFFIC STRIPE.

(TS-28) QUANTITY SHOWN INCLUDES 184 L.F. TRAFFIC STRIPE (MULTI-POLYMER) (WHITE) AND WILL BE MEASURED BY THE LINEAR FOOT OF TWENTY-FOUR INCH (24")WIDE TRAFFIC STRIPE.

(TS-39) OVERHEAD SIGN STRUCTURES AND SIGNS THAT ARE TO BE REMOVED, RESET, AND/OR RELOCATED SHALL BE CAREFULLY REMOVED BY THE CONTRACTOR AND STORED AT A SITE SELECTED BY THE ENGINEER. ANY DAMAGE TO THE STRUCTURES OR SIGNS DURING REMOVAL, TRANSPORTATION, STORAGE, RESETTING, AND/OR RELOCATION OF THE STRUCTURE OR SIGN SHALL BE REPAIRED BY, AND AT THE EXPENSE OF THE CONTRACTOR.

(1) PAY ITEM IS FOR THE REMOVAL OF THE 85' C-1 OVERHEAD SIGN STRUCTURE AND SIGNS ON SOUTHBOUND I-35 AT APPROXIMATELY STATION 437+68, AS SHOWN IN THE PLANS. PRICE BID FOR THIS ITEM SHALL INCLUDE THE REMOVAL OF THE STRUCTURE, UPRIGHTS, SIGNS, ATTENUATOR MODULES AND ATTENUATOR PAD, AS APPROVED BY THE ENGINEER. THE REMOVED EQUIPMENT SHALL BECOME THE PROPERTY OF THE OKLAHOMA DEPARTMENT OF TRANSPORTATION AND DELIVERED TO A LOCATION AS SPECIFIED BY THE ENGINEER. THE HANDLING OF THE ANCHOR BOLTS PROTRUDING FROM THE MEDIAN BARRIER FOOTING OF THE STRUCTURE SHALL BE HANDLED AS SPECIFIED BY THE ENGINEER. THE PRICE BID FOR THIS ITEM SHALL INCLUDE ALL EQUIPMENT, MATERIALS, LABOR AND INCIDENTIALS NECESSARY FOR THE COMPLETE REMOVAL OF THE SPECIFIED EQUIPMENT AND DELIVERY TO A SPECIFIED LOCATION AS DIRECTED BY THE ENGINEER.

(2) THE REMOVAL OF THE EXISTING E5-1a(4A) AND E13-1(40) SIGNS, POSTS AND FOOTINGS SHALL BE INCLUDED IN THE PRICE BID FOR THIS PAY ITEM. THE REMOVED SIGNS, POSTS AND FOOTINGS SHALL BE HANDLED IN ACCORDANCE WITH THE GENERAL NOTES.

(3) THE PRICE BID FOR THIS PAY ITEM SHALL INCLUDE THE INSTALLATION OF PERMANENT TYPE III BARRICADES AND "ROAD CLOSED" SIGNS TO BE LEFT ON THE PROJECT, AFTER COMPLETION, AS SHOWN IN THE SIGNING AND STRIPING PLANS.

PAY QUANTITIES

0300 TRAFFIC

ITEM	DESCRIPTION		UNIT	TOTAL
516(A) 6096	DRILLED SHAFT 60" DIAMETER		LF	72.00
804(A) 2915	STRUCTURAL CONCRETE	(TP-1)	CY	2.68
804(B) 2916	REINFORCING STEEL	(TP-1)	LB	386.00
805(A) 8718	(PL) REMOVAL OF OVERHEAD SIGN STRUCTURE & SIGNS	(TS-39)(1)	LSUM	1.00
850(A) 8110	SHEET ALUMINUM SIGNS		SF	106.18
850(B) 8112	EXTRUDED ALUMINUM PANEL SIGNS	(2)	SF	42.00
850(B) 8114	EXTRUDED ALUMINUM PANEL SIGNS (OVERHEAD SIGNS)		SF	393.75
851(A) 3206	4"@13 GALV. STEEL WIDE FLANGE BEAM POST		LF	45.00
851(B) 3216	2"@3.65 GALV. STEEL PIPE POST		LF	23.50
851(B) 3218	3"@7.58 GALV. STEEL PIPE POST		LF	96.00
852(E) 0500	OVHD. SN. STR., MONOTUBE TYPE C		EA	2.00
856(A) 8530	TRAFFIC STRIPE (MULTI-POLYMER)(4" WIDE)	(TS-24)	LF	3378.00
856(A) 8535	TRAFFIC STRIPE (MULTI-POLY.)(6" WIDE)	(TS-25)	LF	11813.00
856(A) 8540	TRAFFIC STRIPE (MULTI-POLY.)(8" WIDE)	(TS-26)	LF	2466.00
856(A) 8548	TRAFFIC STRIPE (MULTI-POLY)(12" WIDE)	(TS-27)	LF	453.00
856(A) 8555	TRAFFIC STRIPE (MULTI-POLY.)(24" WIDE)	(TS-28)	LF	184.00
856(B) 8860	TRAFFIC STRIPE (MULTI-POLY.)(ARROWS)		EA	11.00
856(B) 8870	TRAFFIC STRIPE (MULTI-POLY.)(SYMBOLS)		EA	2.00
856(B) 8880	TRAFFIC STRIPE (MULTI-POLY.)(WORDS)		EA	2.00
880(C) 8850	PERMANENT BARRICADE UNIT	(3)	EA	3.00

SIGN SUMMARY

SHEET NO.	ITEM NO.	LOCATION		SIGN TYPE	POSTS TYPE	POSTS A L.F.	POSTS B L.F.	POSTS SPACING	FOOTINGS DESIGN NO.	FOOTINGS CONCRETE C.Y.	FOOTINGS STEEL LBS.	SIGN AREA SHEET S.F.	SIGN AREA PANEL S.F.	SIGN AREA PANEL OVERHEAD S.F.	REMARKS
	1	399+00	(S. SERVICE RD.)	R2-1(45)	2" PIPE POST	11.5			A-2	0.06		5.00			
	2	403+55	(RAMP G)	SPECIAL SIGN NO. 1	SIGN MOUNTED ON NEW TYPE C MONOTUBE STRUCTURE				36' - 60" DRILLED SHAFT					263.25	SEE DETAIL SHEETS M1-M7
	3	404+70	(RAMP G)	E5-1A(4A), E13-1(50)	4" WF @ 13	22.0	23.0	3'-8"	KC-0	0.72	130.00		42.00		
	4	420+00	(RAMP G)	W1-8F	3" PIPE POST	12.0			A-4	0.23	32.00	12.00			
	5	421+60	(RAMP G)	W1-8F	3" PIPE POST	12.0			A-4	0.23	32.00	12.00			
	6	423+20	(RAMP G)	W1-8F	3" PIPE POST	12.0			A-4	0.23	32.00	12.00			
	7	424+80	(RAMP G)	W1-8F	3" PIPE POST	12.0			A-4	0.23	32.00	12.00			
	8	426+40	(RAMP G)	W1-8F	3" PIPE POST	12.0			A-4	0.23	32.00	12.00			
	9	428+00	(RAMP G)	W1-8F	3" PIPE POST	12.0			A-4	0.23	32.00	12.00			
	10	429+60	(RAMP G)	W1-8F	3" PIPE POST	12.0			A-4	0.23	32.00	12.00			
	11	431+20	(RAMP G)	W1-8F	3" PIPE POST	12.0			A-4	0.23	32.00	12.00			
	12	434+82	SE 79TH ST	R1-1	2" PIPE POST	12.0			A-2	0.06		5.18			
	13	438+00	I-35	SPECIAL SIGN NO. 2	SIGN MOUNTED ON NEW TYPE C MONOTUBE STRUCTURE				36' - 60" DRILLED SHAFT					130.50	SEE DETAIL SHEETS M1-M7
TOTAL					**2" PIPE POST**	**23.5**				**2.68**	**386.00**	**106.18**	**42.00**	**393.75**	
					3" PIPE POST	**96.0**									
					4" WF @ 13	**45.0**									

R. WAYNE RUSSELL, P.E. # 16030
C.A. # 1160, RENEWAL 06-30-17

9-8-16
DATE

PROFESSIONAL ENGINEER — REGISTERED — R. WAYNE RUSSELL — 16030 — OKLAHOMA

Traffic Engineering Consultants, Inc.
6000 S. Western, Suite 300 - Oklahoma City, OK 73139,
Ph: 405-720-7721, Fax: 405-720-9848, Web: www.tecok.com

Design	RWR	9/8/2016
Drawn	CCC	9/8/2016

TEC — A CLEAR DIRECTION

TRAFFIC SIGNING AND STRIPING PAY QUANTITIES, NOTES AND SIGN SUMMARY

State Job No. 09032(17) Sheet No. 41

OKLAHOMA COUNTY

9/8/2016 G:\0Projects\T-2457A I-240-I-35 Phase IA\CAD\QUANT i.dgn

REVISIONS		
NO.	DESCRIPTION	DATE

GENERAL CONSTRUCTION NOTES

THE STRUCTURAL DESIGN OF ALL POLES, MAST ARMS, HIGH-MAST POLES, AND OTHER SUPPORTS FOR SIGNS, LUMINAIRES, AND SIGNALS, AS WELL AS THEIR CONNECTIONS, SHALL BE IN ACCORDANCE WITH THE LATEST EDITION OF THE AASHTO STANDARD SPECIFICATIONS FOR STRUCTURAL SUPPORTS FOR HIGHWAY SIGNS, LUMINAIRES, AND TRAFFIC SIGNALS. THE MANUFACTURER SHALL ENSURE THE FOLLOWING ARE APPLIED TO THE DESIGN:

THE MINIMUM DESIGN WIND SPEED AND DESIGN LIFE AS REQUIRED IN THE AASHTO SPECIFICATIONS;

THE CALCULATED STRESSES AND FORCES FROM THE DESIGN LOADINGS DO NOT EXCEED THOSE REQUIRED IN THE AASHTO SPECIFICATIONS;

A CATEGORY I FATIGUE IMPORTANCE FACTOR (IF) FOR ALL STRUCTURES; NO VIBRATORY MITIGATION SHALL BE ALLOWED. TRUCK-INDUCED GUSTS SHALL BE APPLIED TO ALL OVERHEAD TRAFFIC SIGNAL SUPPORTS.

ALL MEMBERS ARE AT LEAST THE MINIMUM THICKNESS AS REQUIRED IN THE AASHTO SPECIFICATIONS;

LUMINAIRE MAST ARMS SHALL BE DESIGNED TO SUPPORT AT LEAST A 50 LB. (22.7 KG) LUMINAIRE WITH AN EFFECTIVE PROJECTED AREA OF 2.5 FT2 (0.23 M2); THE ANCHOR BOLT DESIGN AND AMOUNT OF ANCHOR BOLTS TO BE USED SHALL BE AS REQUIRED IN THE AASHTO SPECIFICATIONS.

SIGNAL MAST ARMS AND POLES SHALL BE DESIGNED FOR SPECIFIC SIGNAL HEAD AND SIGN PLACEMENT.

UNLESS SITE SPECIFIC GEOTECHNICAL DATA IS AVAILABLE, FOUNDATIONS SHALL BE DESIGNED UTILIZING THESE PARAMETERS: SHEAR STRENGTH OF COHESIVE SOIL (C) OF 500 PSF, ANGLE OF INTERNAL FRICTION (Φ) OF 22 DEGREES, AND EFFECTIVE UNIT WEIGHT OF SOIL (Γ) OF 120 PCF.

MINIMUM HAND HOLE SIZE OF 3 INCH WIDTH BY 5 INCH HEIGHT.

SYMBOLS AND LEGENDS ARE DIAGRAMMATIC ONLY AND LOCATIONS SHALL BE ADJUSTED FOR EXISTING FIELD CONDITIONS, BUT NO MAJOR ALTERATIONS OR RELOCATIONS WILL BE MADE WITHOUT FIRST CONSULTING WITH THE TRAFFIC ENGINEERING DIVISION AT (405)521-2861.

ALL BROKEN CONCRETE, WASTE MATERIAL, AND DEBRIS SHALL BECOME THE PROPERTY OF THE CONTRACTOR, AND SHALL BE REMOVED FROM THE LIMITS OF THE PROJECT AND DISPOSED OF IN AN AREA APPROVED BY THE ENGINEER. NO PAYMENT WILL BE MADE FOR THE DISPOSAL OF THIS MATERIAL.

ALL REGULATORY SIGNS SHALL BE HIGH INTENSITY SHEETING. THE HIGH INTENSITY SHEETING SHALL MEET THE REQUIREMENTS OF ASTM D4956 (LATEST EDITION) FOR TYPE III SHEETING.

ALL WARNING SIGNS SHALL HAVE FLUORESCENT YELLOW SHEETING. THE FLUORESCENT YELLOW SHEETING SHALL MEET THE REQUIREMENTS OF ASTM D4956 (LATEST EDITION) REQUIREMENTS FOR TYPE VIII SHEETING.

ALL GREEN AND BLUE SIGNS ON CONVENTIONAL HIGHWAYS SHALL HAVE HIGH INTENSITY SHEETING. THE HIGH INTENSITY SHEETING SHALL MEET THE REQUIREMENTS OF ASTM D4956 (LATEST EDITION) FOR TYPE III SHEETING.

ALL PANEL AND OVERHEAD SIGNS SHALL HAVE TYPE III HIGH INTENSITY BACKGROUND WITH TYPE VIII LEGENDS AND BORDERS. THE TYPE III BACKGROUND AND THE TYPE VIII LEGENDS AND BORDERS SHALL MEET THE REQUIREMENTS OF ASTM D4956 (LATEST EDITION).

THE MANUFACTURER SHALL FURNISH A TYPE "A" CERTIFICATION IN ACCORDANCE WITH ODOT STANDARD SPECIFICATIONS, LATEST EDITION, SUBSECTION 106.04. THE CERTIFICATION SHALL INCLUDE TEST RESULTS ON THE MATERIAL SUBMITTED FOR APPROVAL.

ALL BROKEN CONCRETE INCLUDING OLD SIGN FOOTINGS WITH STUBS, WASTE MATERIAL AND DEBRIS SHALL BECOME THE PROPERTY OF THE CONTRACTOR AND SHALL BE REMOVED FROM THE LIMITS OF THE PROJECT AND DISPOSED OF IN AN AREA APPROVED BY THE ENGINEER. NO PAYMENT SHALL BE MADE FOR THE DISPOSAL OF THIS MATERIAL. ANY PIPE POST OR WIDE FLANGE POST ABOVE THE OLD SIGN FOOTINGS SHALL BE CUT AND HANDLED AS PROPERTY OF THE STATE AND SHALL BE NEATLY STACKED ON THE JOB SITE, AS DESIGNATED BY THE ENGINEER UNTIL SUCH TIME AS DIVISION PERSONNEL CAN REMOVE THE MATERIAL FROM THE JOB SITE.

NO SPLICES SHALL BE PERMITTED IN ANY PIPE OR WIDE FLANGE SIGN POSTS.

ALL ANCHOR BOLTS SHALL BE GRADE A-36 STEEL.

THE STATIONS AND LOCATIONS OF THE SIGN PLACEMENT, AS SHOWN ON THE PLAN SHEETS, ARE APPROXIMATE. EXACT STATIONS AND LOCATIONS SHALL BE DETERMINED BY THE CONTRACTOR SO THAT THE SIGN IS INSTALLED IN ACCORDANCE WITH DEPARTMENT STANDARDS AND THE MUTCD IN ORDER TO PROVIDE OPTIMUM VSIBILITY TO THE ONCOMING/APPROACHING MOTORIST. IF A PROPOSED LOCATION CONFLICTS WITH OTHER SIGNS, UTILITIES OR OTHER ROADWAY FEATURES, THE ENGINEER SHALL BE NOTIFIED.

POST LENGTHS SHOWN ON SIGN SUMMARY ARE APPROXIMATE, EXACT LENGTH SHALL BE DETERMINED BY FIELD SURVEY BY THE CONTRACTOR.

ALL EXISTING AND NEW BREAKAWAY SIGN POST, PIPE AND WIDE FLANGE BEAMS SHALL HAVE SHEET METAL BOLT RETAINER PLATES AS SPECIFIED IN O.D.O.T. STD. FGS1-1-(LATEST REVISION). REPLACEMENT COST OF MISSING OR DAMAGED BOLT RETAINER PLATES AND ALL ASSOCIATED HARDWARE AND LABOR SHALL BE INCLUDED IN OTHER ITEMS OF WORK.

ALL REMOVED SIGNS, SIGN POSTS, BOLTS, MISCELLANEOUS HARDWARE, AND DELINEATORS SHALL REMAIN THE PROPERTY OF THE STATE. THE CONTRACTOR SHALL NEATLY STACK SUCH REMOVED MATERIAL AT A LOCATION ON THE JOB SITE AS DESIGNATED BY THE ENGINEER UNTIL SUCH TIME AS DIVISION PERSONNEL CAN REMOVE THE MATERIAL FROM THE JOB SITE.

ALL SIGNS SHALL BE REMOVED FROM THE POSTS IN A SALVAGEABLE MANNER FOR REUSE. CARE SHALL BE TAKEN DURING REMOVAL AND TRANSPORTING TO ALLEVIATE DAMAGE OF MATERIALS. THE CONTRACTOR IS RESPONSIBLE FOR ANY DAMAGE CAUSED DURING REMOVAL OF SIGNS, AND SIGN POSTS.

THE REMOVAL OF SIGN FOOTINGS IN CONCRETE ISLAND SHALL BE REMOVED IN A MANNER APPROVED BY THE ENGINEER. AFTER REMOVAL, THE HOLES SHALL BE PATCHED WITH CONCRETE. THE NEW LOCATION OF SIGN FOOTINGS IN CONCRETE ISLAND SHALL BE SAWED IN A MANNER APPROVED BY THE ENGINEER. CONCRETE PATCHING, SAWING, LABOR, AND ALL OTHER ASSOCIATED COSTS SHALL BE INCLUDED IN OTHER ITEMS OF WORK.

AFTER REMOVAL OF ANY SIGN FOOTINGS, THE HOLES SHALL BE FILLED WITH SOIL AND TAMPED AND SHAPED IN A MANNER APPROVED BY THE ENGINEER.

FOR NEW OR EXISTING GROUND MOUNTED SIGNS MAXIMUM STUB POST PROJECTION ABOVE FOOTING/GROUND LINE SHALL BE 1 3/4" + 1/4" MAXIMUM FOOTING PROJECTION ABOVE GROUND LINE SHALL BE NO MORE THAN 2". SHOULD ADDITIONAL SOIL BE REQUIRED, THE ENGINEER WILL DESIGNATE AN AREA TO OBTAIN ADDITIONAL SOIL. ALL ASSOCIATED COSTS SHALL BE INCLUDED IN OTHER ITEMS OF WORK.

THE CONTRACTOR SHALL BE RESPONSIBLE FOR ANY DAMAGE HE MAY INFLICT TO THE EXISTING UNDERGROUND UTILITIES WITHIN THE PROJECT AREA AS A RESULT OF HIS DIGGING, TRENCHING, BORING, ETC.... PRIOR TO DIGGING NEAR THE UTILITIES, THE CONTRACTOR SHALL CALL FOR A LIST OF ALL UNDERGROUND FACILITIES REGISTERED IN THE AREA OF CONSTRUCTION LISTED WITH THE FOLLOWING AGENCIES:
THE "OKIE" NOTIFICATION CENTER 811 OR (405)522-6543 OR WWW.CALLOKIE.COM OR THE LOCAL COUNTY CLERK'S OFFICE.

R. WAYNE RUSSELL. P.E. # 16030
C.A. # 1160. RENEWAL 06-30-17

9-8-16
DATE

REGISTERED PROFESSIONAL ENGINEER
R. WAYNE RUSSELL
16030
OKLAHOMA

Traffic Engineering Consultants, Inc.
6000 S. Western, Suite 300 - Oklahoma City, OK 73139,
Ph: 405-720-7721, Fax: 405-720-9848, Web: www.tecok.com

Design	RWR	9/8/2016
Drawn	CCC	9/8/2016

TEC
A CLEAR DIRECTION

TRAFFIC SIGNING AND STRIPING
GENERAL CONSTRUCTION NOTES

State Job No. 09032(17) Sheet No. 42

OKLAHOMA COUNTY

9/8/2016 G:\0Projects\17-2457A I-240-I-35 Phase IA\CAD\QUANT 2.dgn

SUMMARY OF PAY QUANTITIES (TRAFFIC OPERATIONS)

0303

ITEM NUMBER	DESCRIPTION	UNIT	QUANTITY
804(A) 2915	STRUCTURAL CONCRETE (TP-1)(SP-5)	C.Y.	6.35
804(B) 2916	REINFORCING STEEL (TP-1)(SP-5)	LB.	577.50
850(A) 8110	SHEET ALUMINUM SIGNS (SP-5)	S.F.	81.06
850(B) 8112	EXTRUDED ALUMINUM PANEL SIGNS (SP-5)	S.F.	286.0
850(B) 8114	EXTRUDED ALUMINUM PANEL SIGNS(OVERHEAD SIGNS) (SP-5)	S.F.	291.5
851(A) 3209	6"Ø25 GALV.STEEL WIDE FLANGE BEAM POST (SP-5)	L.F.	85
851(A) 3212	8"Ø40 GALV.STEEL WIDE FLANGE BEAM POST (SP-5)	L.F.	42
851(B) 3216	2"Ø3.65 GALV.STEEL PIPE POST (SP-5)	L.F.	83
855(A) 8812	CONSTRUCTION TRAFFIC STRIPE(PLASTIC)(4" WIDE) (TC-13)(TS-19)	L.F.	30684
857(A) 8839	CONSTRUCTION TRAFFIC STRIPE(PAINT)(4" WIDE) (TC-15,TC-16,TC-17,TC-20,TC-70,TC-75)(SP-6)	L.F.	43522
857(B) 8842	CONSTRUCTION TRAFFIC STRIPE(PAINT)(ARROWS) (TC-15,TC-16,TC-17,TC-20,TC-70,TC-75)	EA.	6
857(B) 8845	CONSTRUCTION TRAFFIC STRIPE(PAINT)(WORDS) (TC-15,TC-16,TC-17,TC-20,TC-70,TC-75)	EA.	2
857(C) 8851	REMOVABLE PAVEMENT MARKING TAPE (4" WIDE) (TC-19,TC-21,TC-70)	L.F.	1000
857(E) 8887	(PL) CONSTRUCTION ZONE PAVEMENT MARKERS(FLEX TAB)TYPE 2-1 (TC-21,TC-61,TC-70,TC-73,TC-75)	EA.	1500
857(F) 8006	PAVEMENT MARKING REMOVAL(TRAFFIC STRIPE) (TC-22,TC-70,TC-75)	L.F.	36775
870(A) 8485	SAND FILLED IMPACT ATTENUATION MODULE (TC-21,TC-44, TC-45, TC-70)(TS-36)	S.D.	11020
871(B) 8705	(SP) CONST.ZONE IMPACT ATTEN. (TC-52, TC-70, TC-80)(SP-2)	S.D.	290
876(A) 8482	(PL) TRUCK MOUNTED ATTENUATOR (TC-52,TC-70,TC-76,TC-77)	S.D.	175
877(B) 8484	DELIVER PORTABLE LONGITUDINAL BARRIER (TC-1,TC-2)	L.F.	4725
877(C) 8486	RELOCATION OF PORTABLE LONGITUDINAL BARRIER (TC-1)	L.F.	5925
880(A) 8812	ARROW DISPLAY (TYPE C) (TC-84)	S.D.	290
880(B) 8818	CONSTRUCTION SIGNS 0 TO 6.25 S.F. (TC-23,TC-24,TC-26,TC-33,TC-84)	S.D.	9280
880(B) 8821	CONSTRUCTION SIGNS 6.26 TO 15.99 S.F. (TC-23,TC-24,TC-26,TC-33,TC-84)(SP-1)	S.D.	14790
880(B) 8824	CONSTRUCTION SIGNS 16.0 S.F. TO 32.99 S.F. (TC-23,TC-24,TC-26,TC-33,TC-84)	S.D.	14500
880(B) 8827	CONSTRUCTION SIGNS 33.0 S.F. & OVER (TC-23,TC-24,TC-26,TC-31,TC-32,TC-33,TC-84)	S.D.	580
880(C) 8842	CONSTRUCTION BARRICADES (TYPE III) (TC-26,TC-84)	S.D.	2320
880(C) 8848	WING BARRICADES (TC-26,TC-84)	S.D.	2320
880(E) 8860	WARNING LIGHTS (TYPE A) (TC-26,TC-84)	S.D.	9280
880(F) 8878	DRUMS (TC-26,TC-84)(SP-3)	S.D.	51620
880(G) 8884	TUBE CHANNELIZERS (TC-26, TC-70, TC-84)	S.D.	5220
880(L) 8911	TRAFFIC SURVEILLANCE, POLICE (TC-65, TC-70)	HOUR	1400
882 8370	(SP) SMART WORK ZONE SYSTEM - PORTABLE CHANGEABLE MESSAGE SIGN (TC-84)	S.D.	10150
882 8372	(SP) SMART WORK ZONE SYSTEM - PORTABLE TRAFFIC SENSOR (TC-84)	S.D.	7830
882 8374	(SP) SMART WORK ZONE SYSTEM - PAN-TILT-ZOOM CAMERA (TC-84)	S.D.	290
882 8376	(SP) SMART WORK ZONE SYSTEM - WEB SITE SYSTEM (TC-84)	S.D.	290
882 8378	(PL)SMART WORK ZONE SYSTEM SETUP	EA.	1
882(A) 8306	PORT. CHANGABLE MESSAGE SIGN (TC-52, TC-70, TC-85)(SP-4)	S.D.	1160

TRAFFIC OPERATIONS PAY QUANTITY NOTES

(TC-1) THE CONTRACTOR SHALL FURNISH AND INSTALL SUCH LIGHTS, SIGNS, BARRICADES, AND PROVIDE FLAGGERS AS MAY BE NECESSARY FOR THE CONTROL, SAFETY, AND MAINTENANCE OF TRAFFIC WHEN INSTALLING, RELOCATING OR DELIVERING PORTABLE LONGITUDINAL BARRIER.

(TC-2) QUANTITY INCLUDES SUFFICIENT LENGTH OF PORTABLE LONGITUDINAL BARRIER TO PROVIDE FOR THE LONGEST SECTION SHOWN ON THE PLANS. THIS SAME BARRIER WILL BE USED ON OTHER DETOUR PHASES.

(TC-13) A PART, OR ALL, OF THIS ITEM IS INTENDED FOR REPLACEMENT OF REMOVED EXISTING CONFLICTING STRIPING

(TC-15) PAY QUANTITY SHALL MEET THE REQUIREMENTS OF ODOT SPECIFICATION SECTION 711.10 TRAFFIC STRIPE PAINT ACRYLIC WATERBORNE WITH THE EXCEPTION OF THE ACRYLIC EMULSION POLYMER SHALL BE ROHM AND HASS HD-21A OR DOW CHEMICAL DT-400.

(TC-16) PAINT SHALL CONFORM TO SECTION 711 "TRAFFIC STRIPE", OF THE O.D.O.T. STANDARD SPECIFICATIONS FOR HIGHWAY CONSTRUCTION (CURRENT EDITION). IF CONSTRUCTION TRAFFIC STRIPE PAINT IS INSTALLED IN ACCORDANCE WITH THE MANUFACTURER'S SPECIFICATIONS AND FAILS DURING THE FIRST SIX MONTHS OF SERVICE, REPLACEMENT WILL BE MADE AT THE CONTRACTOR'S EXPENSE AND SHALL BE ACCOMPLISHED IN A TIMELY MANNER UPON NOTIFICATION BY THE ENGINEER OF SUCH FAILURE.

(TC-17) INCLUDES AN ESTIMATED 27512 L.F. (PAINT)(4" WIDE) WHITE 16010 L.F. (PAINT)(4" WIDE) YELLOW STRIPE.

(TC-19) THIS ITEM INCLUDES AN ESTIMATED 500 L.F. (4" WIDE) WHITE AND 500 L.F. (4" WIDE) YELLOW STRIPE. THE CONTRACTOR SHALL PROVIDE AND INSTALL AN O.D.O.T. APPROVED REMOVABLE PAVEMENT MARKING TAPE. COST FOR REMOVAL OF THIS TAPE SHALL BE INCLUDED IN THE PRICE BID FOR THIS ITEM. NON-REMOVABLE MARKING TAPE (FOIL BACK) SHALL NOT BE CONSIDERED AN APPROVED EQUAL FOR THIS ITEM.

(TC-20) ALL STRIPING TO BE PLACED ON TEMPORARY SURFACES OR ON SURFACES SCHEDULED TO BE REMOVED SHALL BE DONE WITH PAINT UNLESS OTHERWISE NOTED ON THE PLANS OR STANDARD DRAWINGS. TEMPORARY PAVEMENT MARKINGS PLACED ON FINISHED PAVEMENT OR EXISTING PAVEMENT TO REMAIN IN PLACE SHALL USE ONE OF THE FOLLOWING METHODS:
- *REMOVABLE PAVEMENT MARKING TAPE
- *CLASS A PAVEMENT MARKERS

(TC-21) INCLUDED IN THE COST OF THIS ITEM SHALL BE INSTALLATION, MAINTENANCE AND REMOVAL. THIS ITEM SHALL BE BID ACCORDINGLY.

(TC-22) AMOUNT SHOWN IS AN APPROXIMATION AND THE ACTUAL AMOUNT OF REMOVAL, IF NECESSARY, SHALL BE DETERMINED BY THE ENGINEER. PRICE BID FOR PAVEMENT MARKING REMOVAL SHALL INCLUDE THE COST OF REMOVING STRIPE, ARROWS, WORDS AND SYMBOLS, AS SHOWN IN THE PLANS. THESE ITEMS MAY CONSIST OF PLASTIC, PAINT OR NON-REMOVABLE MARKING TAPE.

TRAFFIC OPER. PAY QUANTITY NOTES (CONT.)

(TC-23) QUANTITY SHOWN FOR THIS ITEM INCLUDES THOSE SIGNS WHICH COMPRISE THE ROUTE MARKER ASSEMBLIES USED TO INDICATE THE DETOUR ROUTE.

(TC-24) QUANTITIES SHOWN FOR CONSTRUCTION SIGNING AND STRIPING HAVE BEEN INCREASED TO ALLOW FOR TRAFFIC CONTROL ON CROSS STREETS NOT SHOWN ON THE PLANS.

(TC-26) ALL CONSTRUCTION TRAFFIC CONTROL WILL BE IMPLEMENTED ACCORDING TO CONSTRUCTION PLANS, AND INSTALLED IN A MANNER APPROVED BY THE ENGINEER, IN ACCORDANCE WITH CHAPTER VI OF THE MANUAL ON UNIFORM TRAFFIC CONTROL DEVICES, (CURRENT EDITION), AND COMPLIANT WITH APPLICABLE O.D.O.T. STANDARD DRAWINGS. PRICE BID FOR THIS ITEM SHALL BE PAYMENT IN FULL FOR THE INSTALLATION, MAINTENANCE AND SUBSEQUENT REMOVAL OF ALL NECESSARY CONSTRUCTION TRAFFIC CONTROL DEVICES REQUIRED FOR COMPLETION OF THE PROJECT.

ALL SIGNS AND BARRICADES WHICH ARE SHOWN WITH TYPE "A" LIGHTS IN THE STANDARD DRAWINGS SHALL HAVE THE CORRESPONDING LIGHT ATTACHED DURING NON-DAYLIGHT HOURS.

(TC-31) INCLUDED IN THIS ITEM ARE ALL S.C.S. (SPECIAL CONSTRUCTION SIGNING) SIGNS WHICH ARE 33.0 S.F. AND OVER. ALSO INCLUDED IN THIS ITEM SHALL BE THE COST OF INSTALLATION, MAINTENANCE, AND REMOVAL OF THESE SIGNS.

(TC-32) SPECIAL CONSTRUCTION SIGNS 33.0 S.F. AND OVER SHALL BE CONSTRUCTED OF EXTRUDED ALUMINUM TO THE DIMENSIONS SHOWN ON THE PLANS. THE SIGNS SHALL BE INSTALLED EITHER ON WIDE FLANGE BEAM POSTS OR OVERHEAD SIGN STRUCTURES IN A MANNER APPROVED BY THE ENGINEER.

(TC-33) ALL CONSTRUCTION WORK ZONE SIGNS SHALL HAVE FLUORESCENT SHEETING. THE FLUORESCENT SHEETING SHALL MEET THE REQUIREMENTS OF ASTM D4956 (LATEST REVISION) THE MANUFACTURER SHALL FURNISH A TYPE "D" CERTIFICATION IN ACCORDANCE WITH O.D.O.T. STANDARD SPECIFICATIONS (CURRENT EDITION) SUBSECTION 106.04. THE CERTIFICATION SHALL INCLUDE TEST RESULTS ON MATERIAL SUBMITTED FOR APPROVAL.

(TC-44) PRICE BID FOR THIS ITEM SHALL INCLUDE ATTENUATOR MODULES, SAND, WOODEN PALLETS (IF REQUIRED), RELOCATION, AND MAINTENANCE.

(TC-45) INCLUDED IN THIS ITEM SHALL BE 38 SAND FILLED MODULES TO BE USED FOR 380 DAYS. THESE MODULES SHALL BE PLACED WHERE SHOWN IN THE PLANS OR ON THE STANDARD DRAWINGS AND INSTALLED AS SHOWN IN THE STANDARD DRAWINGS AND IN ACCORDANCE WITH THE MANUFACTURER'S RECOMMENDATIONS.

(TC-52) ANY USED TRUCK MOUNTED ATTENUATOR, CHANGEABLE MESSAGE SIGN, CONSTRUCTION ZONE IMPACT ATTENUATOR TO BE PLACED ON THIS PROJECT SHALL BE SUBJECT TO INSPECTION AND APPROVAL, BY THE OKLAHOMA DEPARTMENT OF TRANSPORTATION, TO ASSURE THAT THEY ARE IN GOOD WORKING CONDITION, PRIOR TO PLACEMENT ON THE PROJECT.

(TC-61) ANY DAMAGE TO A FINISHED OR EXISTING SURFACE RESULTING FROM THE CONTRACTORS NEGLIGENCE IN THE REMOVAL OF CONSTRUCTION ZONE PAVEMENT MARKERS OR CHANNELIZING DEVICES AND THE BITUMINOUS ADHESIVE USED IN THEIR INSTALLATION, SHALL BE REPAIRED AT THE CONTRACTORS EXPENSE AND TO THE SATISFACTION OF THE ENGINEER.

(TC-65) THE PRICE BID FOR THIS ITEM SHALL INCLUDE THE FOLLOWING:
1. ONE OFFICIALLY MARKED OKLAHOMA HIGHWAY PATROL CAR (WHEN PROJECT INVOLVES A STATE OR FEDERAL HIGHWAY) OR A LOCAL CITY OR COUNTY LAW ENFORCEMENT VEHICLE. PRICE BID FOR THIS ITEM SHALL BE PAID ON A PER UNIT PER HOUR BASIS.
2. ONE LAW ENFORCEMENT OFFICER WITH JURISDICTIONAL AUTHORITY TO WRITE AND ISSUE TRAFFIC CITATIONS. THE LAW ENFORCEMENT OFFICER SHALL BE INSURED, LICENSED AND BONDED, IF REQUIRED, BY THE CONTRACTOR. THIS OFFICER SHALL BE SPECIFICALLY APPROVED AND ASSIGNED TO THIS WORK ACTIVITY.
3. THE CONTRACTOR SHALL MAKE ALL THE NECESSARY ARRANGEMENTS WITH A LAW ENFORCEMENT AGENCY TO PROVIDE THE REQUIRED LAW ENFORCEMENT ON THIS PROJECT.
4. THE CONTRACTOR SHALL BE RESPONSIBLE FOR PROVIDING HIS ANTICIPATED WEEKLY SCHEDULE TO THE ENFORCEMENT AGENCY TWO WEEKS IN ADVANCE OF THE WORK. THE WORK SCHEDULE WILL BE SUBJECT TO THE APPROVAL OF THE ENGINEER.
5. THE LAW ENFORCEMENT AGENCY WILL BE PAID FOR A MAXIMUM OF ONE (1) HOUR, PER WORK PERIOD, TO ALLOW FOR TRAVEL TO AND FROM THE OFFICERS PERMANENT DUTY STATION AND THE WORK SITE. THIS WILL BE PAID ONE (1) TIME PER WORK PERIOD AS DEFINED BY THE CONTRACTOR IN AGREEMENT WITH THE ENGINEER.

(TC-70) THIS ITEM IS AN ESTIMATED QUANTITY TO BE USED AS DEEMED NECESSARY BY THE ENGINEER.

(TC-73) QUANTITY SHOWN INCLUDES 600 EA. (WHITE) AND 900 EA. (YELLOW) CONSTRUCTION ZONE PAVEMENT MARKERS (FLEX TAB). THESE CONSTRUCTION ZONE PAVEMENT MARKERS SHALL BE EITHER "DAVIDSON PLASTICS: MODEL TOM", OR AN APPROVED EQUAL. PRICE BID FOR THIS ITEM SHALL INCLUDE THE INITIAL PLACEMENT, SUBSEQUENT REPLACEMENT, AND REMOVAL. THE CONSTRUCTION ZONE PAVEMENT MARKERS (FLEX TABS) SHALL BE INSTALLED IN ACCORDANCE WITH THE MANUFACTURER'S RECOMMENDATIONS AND AS SHOWN ON STANDARD DRAWING TCS21-1-(LATEST REVISION).

REVISIONS

DESCRIPTION	DATE

TRAFFIC OPER. PAY QUANTITY NOTES (CONT.)

(TC-75) TEMPORARY PAVEMENT MARKINGS SHALL BE IN PLACE THE SAME DAY THAT EXISTING PAVEMENT MARKINGS ARE REMOVED FROM ANY ROADWAY OPEN TO TRAFFIC. ALSO, ALL TEMPORARY PAVEMENT MARKINGS SHALL BE REMOVED PRIOR TO THE INSTALLATION OF FINAL STRIPING.

(TC-76) ANY TRUCK MOUNTED ATTENUATORS USED ON THIS PROJECT SHALL HAVE PASSED ALL MANDATORY AND OPTIONAL TESTS LISTED IN NCHRP 350, TL-3 CRITERIA. THIS ITEM IS TO BE USED WHERE SHOWN IN THE STANDARD DRAWINGS OR AT THE DISCRETION OF THE ENGINEER ON SHADOW VEHICLES PROTECTING THE WORK AREAS AND TEMPORARY ROADSIDE HAZARDS.

(TC-77) TRUCK MOUNTED ATTENUATORS ARE TO BE INSTALLED ON NON-STATE OWNED TRUCKS HAVING A MINIMUM GROSS WEIGHT RATING OF 15,000 POUNDS. EACH OF THESE TRUCKS SHALL ALSO BE EQUIPPED WITH AN ARROW DISPLAY (TYPE B).

(TC-80) INCLUDED IN THIS ITEM SHALL BE ONE (1) ADDITIONAL UNIT TO BE USED AS A STAND-BY OR REPLACEMENT. THIS STAND-BY UNIT SHALL BE IMMEDIATELY ACCESSIBLE TO REPLACE A DAMAGED, STOLEN OR MALFUNCTIONING UNIT. THE AMOUNT OF TIME BETWEEN THE REMOVAL OF THE DAMAGED UNIT AND THE INSTALLATION OF THE STAND-BY UNIT SHALL BE NO MORE THAN TWENTY-FOUR (24) HOURS.

(TC-84) 290 CONSTRUCTION CALENDAR DAYS WERE USED TO COMPUTE THE SIGN DAY PAY ITEMS. THE AMOUNT OF CALENDAR DAYS USED TO COMPUTE THE SIGN DAY PAY ITEMS IS AN ESTIMATED QUANTITY ONLY, BASED ON THE CURRENT O.D.O.T. STANDARDS AND SUGGESTED CONSTRUCTION SEQUENCE FOR THIS PROJECT. THESE ESTIMATED SIGN DAY QUANTITIES MAY CHANGE AS THE PROJECT'S CONSTRUCTION TRAFFIC CONTROL IS MODIFIED DURING CONSTRUCTION.

(TC-85) THESE SIGNS MUST BE ON THE OKLAHOMA DEPARTMENT OF TRANSPORTATION LIST OF APPROVED CHANGEABLE MESSAGE SIGNS. FOR A LIST OF THE APPROVED SIGNS GO TO THE OKLAHOMA DEPARTMENT OF TRANSPORTATION WEBSITE AT: http://www.okladot.state.ok.us/traffic/qpl/index.php

(TS-19) QUANTITY SHOWN INCLUDES 14674 L.F. TRAFFIC STRIPE (PLASTIC)(WHITE) AND 16010 L.F. TRAFFIC STRIPE(PLASTIC)(YELLOW) AND WILL BE MEASURED BY THE LINEAR FOOT OF FOUR INCH (4½) WIDE TRAFFIC STRIPE.

(TS-36) PRICE BID FOR SAND FILLED IMPACT ATTENUATOR(S) SHALL INCLUDE THE COST FOR OM1-1 OR OM1-3 SIGN(S) WITH TYPE VIII SHEETING, AND THE REMOVAL OF ANY OM-3, OR OM-3E SIGN(S), POST(S) AND FOOTING(S), IF PRESENT, AND ALL OTHER INCIDENTALS NECESSARY TO COMPLETE THE INSTALLATION ACCORDING TO PERTINENT O.D.O.T. STANDARD DRAWINGS.

(TP-1) PAYMENT FOR THIS ITEM WILL BE BASED ON PLAN QUANTITY. SEE THE 2009 SPECIFICATIONS FOR HIGHWAY CONSTRUCTION.

(SP-1) SPEED LIMIT SIGNS (R2-1E) SHALL BE PLACED EVERY 1/2 MILE THROUGH THE CONSTRUCTION ZONE.

(SP-2) CONSTRUCTION ZONE QUADGUARD, CONSTRUCTION ZONE TRACC, AND TAU II CONSTRUCTION ZONE IMPACT ATTENUATOR OR AN APPROVED EQUAL SHALL BE USED ON THIS PROJECT. ALL CONSTRUCTION ZONE IMPACT ATTENUATORS MUST MEET NCHRP-350 TEST LEVEL III AND MUST BE ON ODOT'S IMPACT ATTENUATOR GUIDELINES MATRIX.

(SP-3) WARNING LIGHTS TYPE 'C' ARE NOT REQUIRED.

(SP-4) SIGN PLACEMENT SHALL BE DETERMINED BY THE ENGINEER.

(SP-5) THESE ITEMS ARE FOR SIGNS INSTALLED AS PART OF TRAFFIC OPERATIONS, BUT SHALL REMAIN IN PLACE UPON COMPLETION OF THIS PROJECT.

(SP-6) MULTIPLE REAPPLICATIONS MAY BE REQUIRED AS DIRECTED BY THE ENGINEER. COST OF ADDITIONAL APPLICATIONS TO BE INCLUDED IN PRICE BID.

Design		
Drawn		
Checked		
Approved		
Squad	POE	

SUMMARY OF PAY QUANTITIES (TRAFFIC OPERATIONS)

State Job No. 09032(17) Sheet No. 43

SEPT 09, 2016 - 10:35:32
H:\PROJECTS\2789_CrossRoads_InterX_New\PHASE IA\Roadway\Drawings\2789-PH1A PAYQNT_TRAFF_CONTROL.DWG

OKLAHOMA COUNTY

REVISIONS	
DESCRIPTION	DATE

GENERAL CONSTR. NOTES (TRAF. OPER.)

THE CONTRACTOR SHALL PROVIDE A PERSON TO BE ON 24 HOUR CALL AS NEEDED AS DETERMINED BY THE ENGINEER. THIS PERSON SHALL HOLD A CURRENT CERTIFICATION FROM THE AMERICAN TRAFFIC SAFETY SERVICE ASSOCIATION (ATSSA) OR THE OKLAHOMA TRAFFIC ENGINEERING ASSOCIATION (OTEA) AS A TRAFFIC CONTROL TECHNICIAN OR TRAFFIC CONTROL SUPERVISOR.

THE REGULATORY SPEED LIMITS THROUGH THE WORK ZONE MAY BE ADJUSTED AT THE DISCRETION OF THE ENGINEER WITH THE DOCUMENTED APPROVAL OF THE DIVISION ENGINEER IN ACCORDANCE WITH TITLE 47 OF THE OKLAHOMA MOTOR VEHICLE LAWS.

ANY SIGNS AND/OR DELINEATORS WHICH ARE TO BE REMOVED DURING THIS PROJECT WILL BE STORED IN A PROTECTED AREA DESIGNATED BY THE RESIDENT ENGINEER, UNTIL SUCH A TIME THAT THEY ARE TO BE RESET BY THE CONTRACTOR. COST OF THIS WORK TO BE INCLUDED IN OTHER ITEMS OF WORK.

EXISTING ROADWAY SHALL REMAIN OPEN DURING CONSTRUCTION. THE CONTRACTOR SHALL BE RESPONSIBLE FOR PROPER BARRICADES, LIGHTS, AND SIGNING WITHIN THE LIMITS OF CONSTRUCTION. ALL CONSTRUCTION SIGNING WILL BE DONE ACCORDING TO STANDARDS SET FORTH IN THE "MANUAL ON UNIFORM TRAFFIC CONTROL DEVICES, CURRENT EDITION", AND AS SHOWN ON TCS STANDARD DRAWINGS.

THIS PROJECT SHALL BE CONSTRUCTED WITHOUT CLOSING TRAFFIC ON CROSS STREETS. A MINIMUM OF ONE LANE IN EACH DIRECTION SHALL BE MAINTAINED AT ALL TIMES.

ALL TEMPORARY TRAFFIC CONTROL DEVICES SHALL MEET ODOT'S "QUALITY STANDARDS FOR TEMPORARY TRAFFIC CONTROL DEVICES".

CONTRACTOR SHALL NOTIFY THE CITY OF OKLAHOMA CITY A MINIMUM OF 72 HOURS IN ADVANCE OF CHANGES TO TRAFFIC PATTERNS, i.e. LANE CLOSURES, SWITCHING TRAFFIC, etc.

SIGN SUMMARY

ITEM NO.	APPROXIMATE STATION LOCATION	TYPE OF SIGN	TYPE OF POST	ESTIMATED POST LENGTHS L.F.			* LATERAL CLEARANCE	POST SPACE	FTG. DES. NO.	STR'L CONC. CU.YD.	REINF STEEL LBS.	SIGN AREA SQ.FT. NEW		SIGN AREA SQ.FT. OVERLAY	REMARKS
				A	B	C						SHEET	PANEL	PANEL	
1	SW SERV RD.	ROUTE ASSEMBLY 1	2" PIPE POST	13'-10"					A-2	0.6	-	13.51			SEE SHEET NO. TC20 FOR LOCATION
2	SE SERV. RD.	ROUTE ASSEMBLY 1	2" PIPE POST	13'-10"					A-2	0.6	-	13.51			SEE SHEET NO. TC20 FOR LOCATION
3	SE SERV. RD.	ROUTE ASSEMBLY 2	2" PIPE POST	13'-10"					A-2	0.6	-	13.51			SEE SHEET NO. TC20 FOR LOCATION
4	SE SERV. RD.	ROUTE ASSEMBLY 2	2" PIPE POST	13'-10"					A-2	0.6	-	13.51			SEE SHEET NO. TC20 FOR LOCATION
5	SE SERV. RD.	ROUTE ASSEMBLY 2	2" PIPE POST	13'-10"					A-2	0.6	-	13.51			SEE SHEET NO. TC20 FOR LOCATION
6	SE SERV. RD.	ROUTE ASSEMBLY 2	2" PIPE POST	13'-10"					A-2	0.6	-	13.51			SEE SHEET NO. TC20 FOR LOCATION
7	SPS-2	STA.429+00 ℄ RMP'G'	6" @ 25 WFB	20'-6"	21'-0"		8'-0"	7'-3"	KC-2	0.82	174		143.0		18' RT. ℄ RAMP 'G'
8	SPS-2	STA.75+00 ℄ I-35	6" @ 25 WFB	20'-6"	23'-0"		8'-0"	7'-3"	KC-2	0.82	174		143.0		77' LT. ℄ I-35
9	SPS-1	STA.96+00 ℄ I-35	8" @ 40 WFB	20'-6"	21'-6"		8'-0"	7'-3"	KC-5	1.11	428		291.5		ON EXIST. OVRHD. SIGN STRUCTURE
			2" PIPE POST	83'-0"											
	TOTALS		6" @ 25 WFB	85'-0"						6.35	776	81.06	577.5		
			8" @ 40 WFB	42'-0"											

* LATERAL CLEARANCE SHALL BE THE DISTANCE FROM THE FACE OF CURB TO THE EDGE OF THE SIGN. LATERAL CLEARANCE NOT SHOWN SHALL BE ACCORDING TO STD. G.M.S.-1-(LATEST REVISION).

Design		
Drawn		
Checked		
Approved		
Squad	POE	

GENERAL CONSTRUCTION NOTES & SUMMARY (TRAFFIC OPERATIONS)

State Job No. 09032(17) Sheet No. 43A

SEPT 09, 2016 - 10:35:32
H:\PROJECTS\2789_CrossRoads_InterX_New\PHASE IA\Roadway\Drawings\2789-PH1A PAYQNT_TRAFF_CONTROL.DWG

OKLAHOMA COUNTY

REVISIONS	
DESCRIPTION	DATE

SUMMARY OF DRAINAGE STRUCTURES

STRUCTURE NO.	DESIGN DATA: STATION & LOCATION		DESCRIPTION	DESIGN
CD1	BL RAMP G STA. 406+65.46	16.04' RT.	EXTEND EXIST. 2-8'x4' RCB 75.5' RT. W/ WING WALLS	RCB-C2-8(2-12), SBI-4. DET. SHTS. 109A-109C
CD2	CL I-240 STA. 419+64.43	CL	CONST. 10'x5'x235' LG RCB W/ WING WALLS RT. & STD. CURB LT.	RCB-C1-10(2-14), RCB-E1-H5-0-1, RCB-E1-H5-0-2, SBI-4
CD3	CL SWSR STA. 76+58.40	CL	CONST. 10'x4'x286.5' LG RCB 57.4' LT. & 229.1' RT. W/ WING WALLS	RCB-C1-10(2-14), RCB-E1-H4-0-1, RCB-E1-H4-0-2, SBI-4
1	CL I-240 STA. 402+75.00	71.00' RT.	CONST. ILB TYPE 1 DES. 2 w/ 18" x 61.6' LG. RCP TO EXIST. STR. AND REMOVE PLUG	CLB-1, SPI-4
2	CL I-240 STA. 403+46.00	76.14' RT.	CONST. SMD-TYPE 2 w/ 18" x 9.7' LG. RCP TO STR. 3	SMD-3, SPI-4
3	CL I-240 STA. 403+52.00	87.50' RT.	CONST. 4.0' DIA. MH w/ 18" x 44.3' LG. RCP TO STR. G27	MFC-4, MJB-3
SW1	S.W. SERV. RD. STA. 55+70.00	25.00' RT.	CONST. CI DES. 2(D) ON EXIST 18" RCP	CI-1, SPI-4
SW2	S.W. SERV. RD. STA. 58+68.07	27.83' RT.	CONST. ILB TYPE 1 DES. 2 w/ 18" x 37.0' LG. RCP TO EXIST. INLET	CLB-1, SPI-4
SW3	S.W. SERV. RD. STA. 61+00.00	18.33' LT.	CONST. 4.0' DIA. MH ON EXIST. 24" RCP	MFC-4, MJB-3
SW4	S.W. SERV. RD. STA. 61+00.00	13.00' LT	CONST. CI DES. 3(D) w/ 18" x 2.9' LG. RCP TO STR. SW3	CI-1, SPI-4
SW5	S.W. SERV. RD. STA. 61+71.31	14.66' LT.	CONST. 24" x 99.3' LG. RCP TO STR. SW6	SPI-4
SW6	S.W. SERV. RD. STA. 62+74.00	18.11' LT.	CONST. 4.0' DIA. MH w/ 30" x 47.9' LG. RCP TO STR. G11	MFC-4, MJB-3, SPI-4
SW7	S.W. SERV. RD. STA. 64+00.00	22.00' LT.	CONST. 4.0' DIA. MH w/ 18" x 122.0' LG. RCP TO STR. SW6	MFC-4, MJB-3, SPI-4
SW8	S.W. SERV. RD. STA. 64+00.00	13.00' LT.	CONST. CI DES. 3(STD) w/ 18" x 6.5' LG. RCP TO STR. SW7	CI-1, SPI-4
SW9	S.W. SERV. RD. STA. 64+00.00	26.90' RT.	CONST. ILB TYPE 1 DES. 2 w/ 18" x 38.6' LG. RCP TO STR. SW8	CLB-1, SPI-4
SW10	S.W. SERV. RD. STA. 65+30.00	22.50' LT.	CONST. 4.0' DIA. MH w/ 18" x 126.4' LG. RCP TO STR. SW7	MFC-4, MJB-3, SPI-4
SW11	S.W. SERV. RD. STA. 65+30.00	30.77' RT.	CONST. ILB TYPE 1 DES. 2 w/ 18" x 50.1' LG. RCP TO STR. SW10	CLB-1, SPI-4
SW12	S.W. SERV. RD. STA. 68+00.00	22.00' LT.	CONST. 4.0' DIA. MH w/ 18" x 91.6' LG. RCP TO STR. SW14	MFC-4, MJB-3, SPI-4
SW13	S.W. SERV. RD. STA. 68+00.00	13.00' LT.	CONST. CI DES. 2(B) w/ 18" x 6.5' LG. RCP TO STR. SW12	CI-1, SPI-4
SW14	S.W. SERV. RD. STA. 69+00.00	21.90' LT.	CONST. 4.0' DIA. MH w/ 24" x 207.7' LG. RCP TO STR. SW16	MFC-4, MJB-3, SPI-4
SW15	S.W. SERV. RD. STA. 69+00.00	13.00' LT.	CONST. CI DES. 2(STD) w/ 18" x 6.5' LG. RCP TO STR. SW14	CI-1, SPI-4
SW16	S.W. SERV. RD. STA. 71+15.00	22.00' LT.	CONST. 4.0' DIA. MH w/ 24" x 181.6' LG. RCP TO STR. SW19	MFC-4, MJB-3, SPI-4
SW17	S.W. SERV. RD. STA. 71+15.00	13.00' LT.	CONST. CI DES. 3(STD) w/ 18" x 6.5' LG. RCP TO STR. SW16	CI-1, SPI-4
SW18	S.W. SERV. RD. STA. 72+05.00	13.00' RT.	CONST. CI DES. 3(STD) w/ 18" x 87.0' LG. RCP TO STR. SW21	CI-1, SPI-4
SW19	S.W. SERV. RD. STA. 73+00.00	22.00' LT.	CONST. 4.0' DIA. MH w/ 24" x 196.6' LG. RCP TO STR. SW23	MFC-4, MJB-3, SPI-4

SUMMARY OF DRAINAGE STRUCTURES

STRUCTURE NO.	CONCRETE: CLASS A SMALL STR. (C.Y.)	CONCRETE: CLASS AA (C.Y.)	REINFORCING STEEL (LBS.)	UNCLASSIFIED EXCAVATION (C.Y.)	STRUCTURAL EXCAVATION (C.Y.)	REINFORCED CONCRETE PIPE (LF.): 18"	24"	30"	36"	42"	60"	REINFORCED CONCRETE PIPE (ARCH) (LF.): 28"x18"	36"x22"	43"x26"	51"x31"	P.C.C.S. RND. 60" (EA.)	TRENCH EXCAV. (C.Y.)	STD. BEDDING MATERIAL CLASS (C.Y.): B	C	STD. MED. DRAIN TYPE (EA.): 2	2B	STD. MEDIAN DRAIN ADD'L. DEPTH TYPE (V.F.): 2	2B
CD1		159.0	22860	524	97													17.2					
CD2		306.9	55229	1598	166													33.8					
CD3		346.2	63641	3271	210													41.3					
1						61.6											20.1	16.9					
2						9.7											4.1	2.7		1		0.3	
3						44.3											23.4	12.1					
SW1																							
SW2						37.0											16.7	10.2					
SW3																							
SW4						2.9											1.4	0.8					
SW5							99.3										57.9	38.4					
SW6								47.9									102.0	30.5					
SW7						122.0											152.6	48.1					
SW8						6.5											6.4	2.6					
SW9						38.6											23.0	10.6					
SW10						126.4											154.2	49.8					
SW11						50.1											20.0	13.8					
SW12						91.6											79.2	36.1					
SW13						6.5											2.7	1.8					
SW14							207.7										234.6	109.7					
SW15						6.5											2.5	1.8					
SW16							181.6										208.5	95.9					
SW17						6.5											3.6	1.8					
SW18						87.0											47.3	23.9					
SW19							196.6										426.0	103.8					
SHT TOTALS:		812.1	141730	5393	473	697.2	685.2	47.9									1586.2	703.6		1		0.3	

STRUCTURE NO.	CAST IRON CURB INLETS (EA.): 2(STD.)	2(B)	2(D)	2(2B)	3(STD.)	3(B)	3(D)	CI-LGB (EA.): 3(D)	CAST IRON CURB INLETS ADD'L. DEPTH (V.F.): 2(STD.)	2(B)	2(D)	2(2B)	3(STD.)	3(B)	3(D)	CI-LGB ADD'L DEPTH 3(D) (V.F.)	INLET MEDIAN BARRIER DES. 2 (EA.): 1	2	INLET MEDIAN BARRIER ADD'L DEPTH DES. 2 (V.F.): 1	2	INLET FRAME & GRATE TYPE (EA.): B	C	CAST IRON HOODS (EA.): 4" Mntbl.	6" Bar.	MANHOLE (EA.): 4'	5'	6'	MANHOLE ADD'L. DEPTH (V.F.): 4'	5'	6'	JUNCTION BOX (C.F.)	MANHOLE FRAME & COVER (EA.)	STRUCTURE NO.
CD1																																	CD1
CD2																																	CD2
CD3																																	CD3
1																	1		1.9		2												1
2																																	2
3																									1							1	3
SW1			1							2.4											2			6								SW1
SW2																	1		0.8		2												SW2
SW3																									1		1.9			1			SW3
SW4						1									3.0						2	2		8									SW4
SW5																																	SW5
SW6																									1		7.9			1			SW6
SW7																									1		3.4			1			SW7
SW8					1								4.2								2	2		4									SW8
SW9																	1		1.6		2												SW9
SW10																									1		1.2			1			SW10
SW11																	1		1.7		2												SW11
SW12																									1		0.6			1			SW12
SW13		1								1.8											2			4									SW13
SW14																									1		1.4			1			SW14
SW15	1								1.7												2			2									SW15
SW16																									1		1.2			1			SW16
SW17					1								2.8								2	2		4									SW17
SW18					1								3.7								2	2		4									SW18
SW19																									1		6.3			1			SW19
SHT TOTALS:	1	1	1		3		1		1.7	1.8	2.4		10.7		3.0		4		6.0		22	8		32	9		23.9			9			

▲ QUANTITIES SHOWN ARE FOR INFORMATIONAL PURPOSES ONLY. COST OF THESE ITEMS ARE INCLUDED IN OTHER ITEMS OF BID.

Design		
Drawn		
Checked		
Approved		
Squad	POE	

SUMMARY OF DRAINAGE STRUCTURES SHEET 1 OF 4

State Job No. 09032(17) Sheet No. 44

SEPT 07, 2016 - 16:20:18
H:\PROJECTS\2789_CrossRoads_InterX_New\PHASE IA\Roadway\Drawings\2789-PHASE 1ASUMDRAINAGE.DWG

REVISIONS	
DESCRIPTION	DATE

SUMMARY OF DRAINAGE STRUCTURES

STRUCTURE NO.	DESIGN DATA			
	STATION & LOCATION		DESCRIPTION	DESIGN
SW20	S.W. SERV. RD. STA. 73+00.00	13.00' LT.	CONST. CI DES. 2(STD) w/ 18" x 6.5' LG. RCP TO STR. SW19	CI-1, SPI-4
SW21	S.W. SERV. RD. STA. 73+00.00	13.00' RT.	CONST. CI DES. 2(STD) w/ 18" x 23.4' LG. RCP TO STR. SW20	CI-1, SPI-4
SW22	S.W. SERV. RD. STA. 74+52.00	13.00' RT.	CONST. CI DES. 2(STD) w/ 18" x 146.7' LG. RCP TO STR. SW21	CI-1, SPI-4
SW23	S.W. SERV. RD. STA. 75+00.00	22.00' LT.	CONST. 4.0' DIA. MH w/ 24" x 155.6' LG. RCP TO STR. CD3	MFC-4, MJB-3, SPI-4
SW24	S.W. SERV. RD. STA. 75+00.00	13.00' LT.	CONST. CI DES. 2(STD) w/ 18" x 6.5' LG. RCP TO STR. SW23	CI-1, SPI-4
SW25	S.W. SERV. RD. STA. 79+00.00	22.00' LT.	CONST. 4.0' DIA. MH w/ 18" x 63.3' LG. RCP TO STR. CD2	MFC-4, MJB-3, SPI-4
SW26	S.W. SERV. RD. STA. 79+00.00	13.00' LT.	CONST. CI DES. 2(STD) w/ 18" x 6.5' LG. RCP TO STR. SW25	CI-1, SPI-4
SW27	S.W. SERV. RD. STA. 81+46.00	22.00' LT.	CONST. 4.0' DIA. MH w/ 24" x 162.1' LG. RCP TO STR. CD2	MFC-4, MJB-3, SPI-4
SW28	S.W. SERV. RD. STA. 81+46.00	13.00' LT.	CONST. DES. 2(STD) w/ 18" x 8.5' LG. RCP TO STR. SW27	CI-1, SPI-4
SW29	S.W. SERV. RD. STA. 82+43.00	55.00' LT.	CONST. DES. 2(STD) w/ 18" x 26.9' LG. RCP TO STR. SW30	CI-1, SPI-4
SW30	S.W. SERV. RD. STA. 82+35.00	27.00' LT.	CONST. 4.0' DIA. MH w/ 18" x 84.5' LG. RCP TO STR. SW27	MFC-4, MJB-3, SPI-4
SW31	S.W. SERV. RD. STA. 85+00.00	22.00' LT.	CONST. 4.0' DIA. MH w/ 18" x 126.7' LG. RCP TO STR. SW33	MFC-4, MJB-3, SPI-4
SW32	S.W. SERV. RD. STA. 85+00.00	13.00' LT.	CONST. CI DES. 3(STD) w/ 18" x 6.5' LG. RCP TO STR. SW31	CI-1, SPI-4
SW33	S.W. SERV. RD. STA. 86+31.00	22.60' LT.	CONST. 4.0' DIA. MH w/ 18" x 108.5' LG. RCP TO STR. SW36	MFC-4, MJB-3, SPI-4
SW34	S.W. SERV. RD. STA. 86+31.00	13.00' LT.	CONST. CI DES. 3(STD) w/ 18" x 7.2' LG. RCP TO STR. SW33	CI-1, SPI-4
SW35	S.W. SERV. RD. STA. 87+43.00	33.67' LT.	CONST. CI DES. 2(STD) w/ 18" x 9.1' LG. RCP TO STR. SW36	CI-1, SPI-4
SW36	S.W. SERV. RD. STA. 87+43.00	22.00' LT.	CONST. 4.0' DIA. MH w/ 24" x 170.7' LG. RCP TO STR. SW 39	MFC-4, MJB-3, SPI-4
SW37	S.W. SERV. RD. STA. 87+43.00	13.00' LT.	CONST. CI DES. 2(STD) w/ 18" x 6.5' LG. RCP TO STR. SW36	CI-1, SPI-4
SW38	S.W. SERV. RD. STA. 87+43.00	13.00' RT.	CONST. CI DES. 2(STD) w/ 18" x 23.4' LG. RCP TO STR. SW37	CI-1, SPI-4
SW39	S.W. SERV. RD. STA. 89+17.00	22.00' LT.	CONST. 4.0' DIA. MH w/ 24" x 179.8' LG. RCP TO STR. SW42	MFC-4, MJB-3, SPI-4
SW40	S.W. SERV. RD. STA. 89+17.00	13.00' LT.	CONST. CI DES. 2(STD) w/ 18" x 6.5' LG. RCP TO STR. SW39	CI-1, SPI-4
SW41	S.W. SERV. RD. STA. 89+17.00	13.00' RT.	CONST. CI DES. 2(STD) w/ 18" x 23.4' LG. RCP TO STR. SW40	CI-1, SPI-4
SW42	S.W. SERV. RD. STA. 91+00.00	22.00' LT.	CONST. 4.0' DIA. MH w/ 24" x 6.6' LG. RCP TO STR. SW43	MFC-4, MJB-3, SPI-4
SW43	S.W. SERV. RD. STA. 91+00.00	13.00' LT.	CONST. CI DES. 2(STD) w/ 36" x 22" x 23.4' LG. RCPA TO STR. SW44	CI-1, SPI-4
SW44	S.W. SERV. RD. STA. 91+00.00	13.00' RT.	CONST. CI DES. 2(STD) w/ 36" x 22" x 17.4' LG. RCPA TO STR. G32	CI-1, SPI-4
SW45	S.W. SERV. RD. STA. 94+00.00	22.00' LT.	CONST. 4.0' DIA. MH w/ 24" x 6.6' LG. RCP TO STR. SW46	MFC-4, MJB-3, SPI-4
SW46	S.W. SERV. RD. STA. 94+00.00	13.00' LT.	CONST. CI DES. 2(STD) w/ 24" x 23.4' LG. RCP TO STR. SW47	CI-1, SPI-4

SUMMARY OF DRAINAGE STRUCTURES

STRUCTURE NO.	CONCRETE		REINFORCING STEEL	UNCLASSIFIED EXCAVATION	STRUCTURAL EXCAVATION	REINFORCED CONCRETE PIPE						REINFORCED CONCRETE PIPE (ARCH)				P.C.E.S.	TRENCH EXCAV.	STD. BEDDING MATERIAL		STD. MED. DRAIN		STD. MEDIAN DRAIN ADD'L. DEPTH		CAST IRON CURB INLETS							CI-LGB	CAST IRON CURB INLETS ADD'L. DEPTH						CI-LGB ADD'L DEPTH	INLET MEDIAN BARRIER		INLET MEDIAN BARRIER ADD'L DEPTH		INLET FRAME & GRATE		CAST IRON HOODS		MANHOLE			MANHOLE ADD'L. DEPTH			JUNCTION BOX	MANHOLE FRAME & COVER	STRUCTURE NO.
	CLASS A SMALL STR.	CLASS AA				18"	24"	30"	36"	42"	60"	28"x18"	36"x22"	43"x26"	51"x31"	RND. 60"		B	C	2	2B	2	2B	2(STD.)	2(1B)	2(1D)	2(12B)	3(STD.)	3(1B)	3(1D)	3(1D)	2(STD.)	2(1B)	2(1D)	2(12B)	3(STD.)	3(1B)	3(1D)	3(1D)	1	2	1	2	B	C	4" Mntbl.	6" Bar.	4'	5'	6'	4'	5'	6'			
	C.Y.	C.Y.	LBS.	C.Y.	C.Y.	LF.						LF.				EA.	C.Y.	C.Y.		EA.		V.F.	EA.								EA.	V.F.						V.F.	EA.		DES. 2	V.F.	DES. 2	EA.		EA.			V.F.			C.F.	EA.	
SW20						6.5											3.6	1.8					1								3.7										2			2											SW20
SW21						23.4											7.8	6.5					1								3.6										2			2											SW21
SW22						146.7											48.8	40.2					1								1.4										2			2											SW22
SW23							155.6										256.5	82.2																													1		6.8			1	SW23
SW24						6.5											3.6	1.8					1								1.6										2			2											SW24
SW25						63.3											33.4	17.3																													1					1	SW25
SW26						6.5											2.2	1.8					1								0.4										2			2											SW26
SW27							162.1										180.1	85.6																													1		3.2			1	SW27
SW28						8.5											3.2	2.4					1								2.0										2			2											SW28
SW29						26.9											8.7	7.4					1								0.5										2			2											SW29
SW30						84.5											34.7	23.2																													1					1	SW30
SW31						126.7											190.1	66.9																													1		1.0			1	SW31
SW32						6.5											2.1	1.8										1								1.8								2	2	4								SW32
SW33						108.5											138.7	42.7																													1		2.0			1	SW33
SW34						7.2											7.2	2.9										1								2.7								2	2	4								SW34
SW35						9.1											9.1	3.6					1								1.8										2			2											SW35
SW36							170.7										261.7	90.1																													1		2.4			1	SW36
SW37						6.5											3.4	1.8					1								2.8										2			2											SW37
SW38						23.4											20.0	9.3					1								2.7										2			2											SW38
SW39							179.8										106.5	69.4																													1		2.2			1	SW39
SW40						6.5											4.0	1.8					1								2.7										2			2											SW40
SW41						23.4											14.4	6.5					1								2.5										2			2											SW41
SW42							6.6										3.9	2.5																													1		3.7			1	SW42
SW43													23.4				28.8	14.2					1								5.1										2			2											SW43
SW44													17.4				24.9	13.0					1								5.2										2			2											SW44
SW45							6.6										11.6	3.5																													1		1.8			1	SW45
SW46							23.4										23.6	12.4					1								4.4										2			2											SW46
SHT TOTALS:						690.6	704.8						40.8				1432.6	612.6					15				2				40.4				4.5						34	4		38	10		23.1					10	

▲ QUANTITIES SHOWN ARE FOR INFORMATIONAL PURPOSES ONLY. COST OF THESE ITEMS ARE INCLUDED IN OTHER ITEMS OF BID.

Design		
Drawn		
Checked		
Approved		
Squad	POE	

SUMMARY OF DRAINAGE STRUCTURES
SHEET 2 OF 4

State Job No. 09032(17) Sheet No. 45

SEPT 07, 2016 - 16:20:18
H:\PROJECTS\2789_CrossRoads_InterX_New\PHASE IA\Roadway\Drawings\2789-PHASE 1ASUMDRAINAGE.DWG

REVISIONS	
DESCRIPTION	DATE

SUMMARY OF DRAINAGE STRUCTURES

STRUCTURE NO.	DESIGN DATA: STATION & LOCATION		DESCRIPTION	DESIGN
SW47	S.W. SERV. RD. STA. 94+00.00	13.00' RT.	CONST. CI DES. 2(STD) w/ 24" x 22.2' LG. RCP TO STR. G29	CI-1, SPI-4
SW48	S.W. SERV. RD. STA. 94+80.00	13.00' RT.	CONST. CI DES. 2(STD) w/ 18" x 74.7' LG. RCP TO STR. SW47	CI-1, SPI-4
SW49	S.W. SERV. RD. STA. 95+41.00	41.00' LT.	CONST. CI DES. 2(STD) w/ 18" x 16.6' LG. RCP TO STR. SW50	CI-1, SPI-4
SW50	S.W. SERV. RD. STA. 95+41.00	22.00' LT.	CONST. 4.0' DIA. MH w/ 24" x 137.6' LG. RCP TO STR. SW45	MFC-4, MJB-3, SPI-4
SW51	S.W. SERV. RD. STA. 95+41.00	13.00' LT.	CONST. CI DES. 3(STD) w/ 18" x 6.5' LG. RCP TO STR. SW50	CI-1, SPI-4
SW52	S.W. SERV. RD. STA. 98+00.00	22.00' LT.	CONST. 4.0' DIA. MH w/ 18" x 252.7' LG. RCP TO STR. SW50	MFC-4, MJB-3, SPI-4
SW53	S.W. SERV. RD. STA. 98+00.00	13.00' LT.	CONST. CI DES. 3(STD) w/ 18" x 6.5' LG. RCP TO STR. SW52	CI-1, SPI-4
SW54	S.W. SERV. RD. STA. 103+91.00	13.00' LT.	CONST. CI DES. 3(B) w/ 18" x 99.5' LG. RCP TO EXIST. MH	CI-1, SPI-4
SW55	S.W. SERV. RD. STA. 103+94.00	13.00' RT.	CONST. CI DES. 3(B) w/ 18" x 23.6' LG. RCP TO STR. SW54	CI-1, SPI-4
G1	CL I-35 STA. 52+75.00	68.10' LT.	CONST. ILB TYPE 1 DES. 2 w/ 18" x 4.4' LG. RCP TO STR. G3	CLB-1, SPI-4
G2	BL RAMP G STA. 446+43.88	12.00' RT.	CONST. ILB TYPE 1 DES. 2 w/ 18" x 4.5' LG. RCP TO STR. G5	CLB-1, SPI-4
G3	CL-I-35 STA. 52+75.00	75.00' LT.	CONST. 4.0' DIA. MH w/ 28" x 18" x 186.4' LG. RCPA TO STR. G5	MFC-4, MJB-3, SPI-4
G4	CL I-35 STA. 51+55.63	73.70' LT.	CONST. 24" x 117.7' LG. RCP FROM EXIST. MH TO STR. G3	SPI-4
G5	BL RAMP G STA. 446+44.12	4.30' RT.	CONST. 4.0' DIA. MH w/ 28" x 18" x 55.5' LG. RCPA TO EXIST. MH	MFC-4, MJB-3, SPI-4
G6	BL RAMP G STA. 445+83.98	12.00' RT.	CONST. ILB TYPE 1 DES. 2 ON EXIST. 18" RCP	CLB-1
G7	BL RAMP G STA. 444+83.20	12.00' RT.	CONST. ILB TYPE 1 DES. 2 w/ 18" x 5.9' LG. RCP TO EXIST. MH	CLB-1, SPI-4
G8	BL RAMP G STA. 443+50.00	12.00' RT.	CONST. ILB TYPE 1 DES. 2 w/ 18" x 3.7' LG. RCP TO STR. G17	CLB-1, SPI-4
G9	BL RAMP G STA. 442+00.00	12.00' RT.	CONST. ILB TYPE 1 DES. 2 w/ 18" x 3.7' LG. RCP TO STR. G19	CLB-1, SPI-4
G10	CL I-240 STA. 409+00.00	18.20' RT.	CONST. SMD-TYPE 2 w/ 18" x 71.0' LG. RCP TO STR. G32	SMD-3, SPI-4
G11	BL RAMP G STA. 438+34.58	12.00' RT.	CONST. ILB TYPE 1 DES. 2 w/ 30" x 6.2' LG. RCP TO EXIST. MH	CLB-1, SPI-4
G12	BL RAMP G STA. 436+10.05	12.00' RT.	CONST. ILB TYPE 1 DES. 2 w/ 18" x 2.7' LG. RCP TO EXIST. MH	CLB-1, SPI-4
G13	BL RAMP G STA. 434+34.53	12.00' RT.	CONST. ILB TYPE 1 DES. 2 w/ 18" x 3.3' LG. RCP TO EXIST. MH	CLB-1, SPI-4
G14	BL RAMP G STA. 433+00.00	15.46' RT.	CONST. ILB TYPE 1 DES. 2 w/ 18" x 5.6' LG. RCP TO STR. G20	CLB-1, SPI-4
G15	BL RAMP G STA. 431+75.00	21.80' RT.	CONST. ILB TYPE 1 DES. 2 w/ 18" x 11.1' LG. RCP TO STR. G21	CLB-1, SPI-4
G16	BL RAMP G STA. 444+83.17	1.80' RT.	CONST. 42" x 128.9' LG. RCP FROM EXIST. MH TO STR. G17	SPI-4
G17	BL RAMP G STA. 443+50.00	4.00' RT.	CONST. 6.0' DIA. MH w/ 42" x 145.2' LG. RCP TO STR. G19	MFC-4, MJB-3, SPI-4

SUMMARY OF DRAINAGE STRUCTURES

| STRUCTURE NO. | CONCRETE: CLASS A SMALL STR. C.Y. | CONCRETE: CLASS AA C.Y. | REINFORCING STEEL LBS. | UNCLASSIFIED EXCAVATION C.Y. | STRUCTURAL EXCAVATION C.Y. | REINFORCED CONCRETE PIPE LF: 18" | 24" | 30" | 36" | 42" | 60" | REINFORCED CONCRETE PIPE (ARCH) LF: 28"x18" | 36"x22" | 43"x26" | 51"x31" | P.C.E.S. RND. 60" EA. | TRENCH EXCAV. C.Y. | STD. BEDDING MATERIAL CLASS: B C.Y. | C.Y. | STD. MED. DRAIN TYPE: 2 EA. | 2B EA. | STD. MEDIAN DRAIN ADD'L. DEPTH TYPE: 2 V.F. | 2B V.F. | CAST IRON CURB INLETS EA.: 2(STD.) | 2(1B) | 2(1D) | 2(2B) | 3(STD.) | 3(1B) | 3(1D) | CI-LGB 3(1D) EA. | CAST IRON CURB INLETS ADD'L. DEPTH V.F.: 2(STD.) | 2(1B) | 2(1D) | 2(2B) | 3(STD.) | 3(1B) | 3(1D) | CI-LGB ADDL DEPTH 3(1D) V.F. | INLET MEDIAN BARRIER DES. 2: 1 | 2 | INLET MEDIAN BARRIER ADD'L DEPTH DES. 2 V.F.: 1 | 2 | INLET FRAME & GRATE TYPE: B | C EA. | CAST IRON HOODS EA.: 4" Mntbl. | 6" Bar. | MANHOLE EA.: 4' | 5' | 6' | MANHOLE ADD'L. DEPTH V.F.: 4' | 5' | 6' | JUNCTION BOX C.F. | MANHOLE FRAME & COVER EA. | STRUCTURE NO. |
|---|---|---|---|---

REVISIONS	
DESCRIPTION	DATE

SUMMARY OF DRAINAGE STRUCTURES

STRUCTURE NO.	DESIGN DATA		
	STATION & LOCATION	DESCRIPTION	DESIGN
G18	BL RAMP G STA. 430+59.00 30.10' RT.	CONST. ILB TYPE 1 DES. 2 w/ 28" x 18" x 59.3' LG. RCPA TO STR. G22	CLB-1, SPI-4
G19	BL RAMP G STA. 442+00.00 4.00' RT.	CONST. 6.0' DIA. MH w/ 42" x 360.6' LG. RCP TO EXIST. MH	MFC-4, MJB-3, SPI-4
G20	BL RAMP G STA. 433+00.00 4.50' RT.	CONST. 8.0' x 7.0' JUNCT. BOX w/ 60" x 117.5' LG. RCP TO STR. G21	MFC-4, MJB-3, SPI-4, DET. SHTS. 106-108
G21	BL RAMP G STA. 431+75.00 5.40' RT.	CONST. 8.0' x 7.0' JUNCT. BOX w/ 60" x 117.2' LG. RCP TO STR. G22	MFC-4, MJB-3, SPI-4, DET. SHTS. 106-108
G22	BL RAMP G STA. 430+59.00 34.00' LT.	CONST. 8.0' x 7.0' JUNCT. BOX w/ 60" x 414.6' LG. RCP TO PCES OUTLET	MFC-4, MJB-3, PCES-4, SPI-4, DET. SHTS. 106-108
G23	BL RAMP G STA. 429+80.31 10.00' RT.	CONST. CI DES. 2(STD) w/ 18" x 74.8' LG. RCP TO STR. G18	CI-1, SPI-4
G24	BL RAMP G STA. 414+25.00 10.00' RT.	CONST. CI DES. 2(D) w/ 18" x 320.3' LG. RCP TO STR. G31	CI-1, SPI-4
G25	BL RAMP G STA. 411+00.00 10.00' RT.	CONST. CI DES. 2(B) w/ 18" x 3.5' LG. RCP TO STR. G31	CI-1, SPI-4
G26	BL RAMP G STA. 408+00.00 10.00' RT.	CONST. CI DES. 2(D) w/ 18" x 3.4' LG. RCP TO STR. G34	CI-1, SPI-4
G27	BL RAMP G STA. 404+00.00 10.00' RT.	CONST. CI DES. 3(D) w/ LARGE JUNCTION BOX w/ 18" x 170.7' LG. RCP TO STR. G29	DETAIL SHT. NO. 110, SPI-4
G28	BL RAMP G STA. 423+50.00 51.70' RT.	CONST. SMD-TYPE 2B w/ 36" x 26.3' LG. RCP TO STR. CD3	SMD-3, SPI-4
G29	BL RAMP G STA. 405+70.00 15.00' RT.	CONST. 4.0' DIA. MH w/ 36" x 22" x 67.6' LG. RCPA TO STR. G30	MFC-4, MJB-3, SPI-4
G30	BL RAMP G STA. 406+45.00 15.00' RT.	CONST. 4.0' DIA. MH w/ 36" x 22" x 5.5' LG. RCPA TO EXIST. RCB	MFC-4, MJB-3, SPI-4
G31	BL RAMP G STA. 411+00.00 16.00' RT.	CONST. 4.0' DIA. MH w/ 24" x 228.7' LG. RCP TO STR. G32	MFC-4, MJB-3, SPI-4
G32	BL RAMP G STA. 408+67.12 16.00' RT.	CONST. 6.0' x 5.0' JUNCT. BOX w/ 43" x 26" x 34.9' LG. RCPA TO STR. G33	MFC-4, MJB-3, SPI-4, DET. SHTS. 106-108
G33	BL RAMP G STA. 408+26.71 16.00' RT.	CONST. 7.0' x 6.0' JUNCT. BOX w/ 51" x 31" x 20.8' LG. RCPA TO STR. G34	MFC-4, MJB-3, SPI-4, DET. SHTS. 106-108
G34	BL RAMP G STA. 408+00.00 17.50' RT.	CONST. 7.0' x 6.0' JUNCT. BOX w/ 51" x 31" x 123.6' LG. RCPA TO STR. CD1	MFC-4, MJB-3, SPI-4, DET. SHTS. 106-108
G35	BL RAMP G STA. 430+59.50 35.60' RT.	CONST. SMD-TYPE 2 W/ 18" x 3.3' LG. RCP TO STR. G36	SMD-3, SPI-4
G36	BL RAMP G STA. 430+60.00 42.10' RT.	CONST. 4.0' DIA MH w/ 18" x 10.2' LG. RCP TO STR. G18	MFC-4, MJB-3, SPI-4
G37	BL RAMP G STA. 442+43.00 17.60' RT.	CONST. SMD-TYPE 2 W/ 18" x 39.5' LG. RCP TO STR. G38	SMD-3, SPI-4
G38	BL RAMP G STA. 442+00.00 21.50' RT.	CONST. 4.0' DIA MH w/ 18" x 7.0' LG. RCP TO STR. G9	MFC-4, MJB-3, SPI-4
M1	BL RAMP M STA. 430+32.99 15.00' RT.	CONST. CI DES. 2(STD) w/ 18" x 45.7' LG. RCP TO STR. SW15	CI-1, SPI-4

SUMMARY OF DRAINAGE STRUCTURES

STRUCTURE NO.	CONCRETE CLASS A SMALL STR. (C.Y.)	CONCRETE CLASS AA (C.Y.)	REINFORCING STEEL (LBS.)	UNCLASSIFIED EXCAVATION (C.Y.)	STRUCTURAL EXCAVATION (C.Y.)	REINFORCED CONCRETE PIPE (LF.) 18"	24"	30"	36"	42"	60"	REINFORCED CONCRETE PIPE (ARCH) (LF.) 28"x18"	36"x22"	43"x26"	51"x31"	P.C.F.S. RND. 60" (EA.)	TRENCH EXCAV. (C.Y.)	STD. BEDDING MATERIAL CLASS B (C.Y.)	STD. BEDDING MATERIAL CLASS C (C.Y.)	STD. MED. DRAIN TYPE 2 (EA.)	STD. MED. DRAIN TYPE 2B (EA.)	STD. MEDIAN DRAIN ADD'L. DEPTH TYPE 2 (V.F.)	STD. MEDIAN DRAIN ADD'L. DEPTH TYPE 2B (V.F.)	CAST IRON CURB INLETS 2(STD.) (EA.)	2(B)	2(D)	2(2B)	3(STD.)	3(B)	3(D)	CI-LGB (EA.) 3(D)	CAST IRON CURB INLETS ADD'L. DEPTH 2(STD.) (V.F.)	2(B)	2(D)	2(2B)	3(STD.)	3(B)	3(D)	CI-LGB ADD'L DEPTH 3(D) (V.F.)	INLET MEDIAN BARRIER DES. 2 1 (EA.)	2	INLET MEDIAN BARRIER ADD'L DEPTH DES. 2 1 (V.F.)	2	INLET FRAME & GRATE TYPE B	C (EA.)	CAST IRON HOODS 4" Mntbl. (EA.)	6" Bar. (EA.)	MANHOLE 4' (EA.)	5'	6'	MANHOLE ADD'L. DEPTH 4' (V.F.)	5'	6'	JUNCTION BOX (C.F.)	MANHOLE FRAME & COVER (EA.)	STRUCTURE NO.
G18												59.3					34.0	22.2													1		1.2		2															G18
G19										360.6							1145.8	388.4																											1			7.6		1	G19
G20	9.7		1770								117.5						328.1	211.9																														1	G20
G21	9.2		1770								117.2						319.0	211.3																														1	G21
G22	9.1		1770								414.6					1	704.6	635.2																														1	G22
G23						74.8											17.3	20.5						1							1.9																G23
G24						320.3											121.5	87.8								1							1.9														G24
G25						3.5											1.0	1.0							1							1.8														G25
G26						3.4											1.3	1.0								1							2.0														G26
G27						170.7											45.3	46.8													1																G27
G28									26.3								41.0	24.7			1		3.1																									G28
G29													67.6				64.7	40.8																														1	G29
G30													5.5				4.9	3.4																														1	G30
G31							228.7										129.8	88.3																														1	G31
G32	5.7		1080											34.9			46.0	26.2																														1	G32
G33	7.9		1430												20.8		35.6	22.4																														1	G33
G34	7.8		1430												123.6		156.9	107.5																														1	G34
G35						3.3											1.5	1.0			1																										G35
G36						10.2											21.0	4.0																														1	G36
G37						39.5											16.9	10.9			1																										G37
G38						7.0											16.9	2.8																														1	G38
M1						45.7											20.6	12.6						1							2.0													2			2													M1
SHT TOTALS:	49.4		9250			678.4	228.7		26.3	360.6	649.3	59.3	73.1	34.9	144.4	1	3273.7	1970.7		2	1		3.1	2	1	2				1	3.9	1.8	3.9					1		1.2		14	2	26	2	5		1	26.0		7.6		12	
ALL SHT TOTALS:	49.4	849.3	156710	5399	473	2662.2	1846.2	54.1	26.3	634.7	649.3	301.2	113.9	34.9	144.4	1	7674.1	4080.2		4	1	0.3	3.1	21	2	3		7	2	1	1	54.4	3.6	6.3		18.8	3.8	3.0		16		37.1		106	22	26	98	28		2	79.8		13.1		36	

▲ ▲ ▲

REVISIONS	
DESCRIPTION	DATE

SUMMARY OF REMOVALS

LOCATION STATION TO STATION	REMOVAL OF CONC. CURB & GUTTER *	REMOVAL OF CONCRETE PAVEMENT	REMOVAL OF ASPHALT PAVEMENT	PAVEMENT SAWCUT *	REMOVAL OF CONC. SLOPE PROTECTION *	REMOVAL OF CONCRETE BARRIER *	REMOVAL OF CONCRETE RETAINING WALL *	REMOVAL OF CONCRETE DIVIDING STRIP *	REMOVAL OF CONCRETE DRIVEWAY *	REMOVAL OF ASPHALT DRIVEWAY *	REMOVE AND RECONSTRUCT GUARDRAIL
	L.F.	S.Y.	S.Y.	L.F.	S.Y.	L.F.	L.F.	S.Y.	S.Y.	S.Y.	L.F.
I-240											
394+25.00 - 405+00.00	2384		3869	957	245			1782	908	520	150
405+00.00 - 420+00.00	2772		5350	1191					2364	9528	
420+00.00 - 435+00.00	2549		3918	115							
I-35											
52+47.40 - 57+00.00		1160		745				123			
57+00.00 - 72+00.00	1899	4657	3628	2319		338	400	142	945	1000	
72+00.00 - 78+63.62	1327	1247	464	849		600					
TOTAL	* 10931	7064	17229	* 6176	* 245	* 938	* 400	* 2047	* 4217	* 11048	150

* QUANTITY SHOWN IS FOR INFORMATION PURPOSES ONLY.
SEE GENERAL NOTE 3 THIS SHEET.

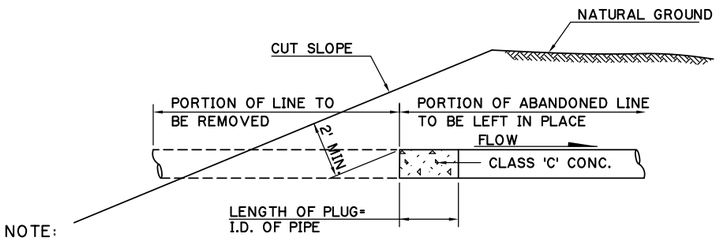

NOTE:

ALL PIPE LINES ABANDONED AND LEFT IN PLACE BY OTHERS AND STORM SEWERS, SANITARY SEWERS AND WATER LINES WHICH ARE ABANDONED UNDER THIS CONTRACT, SHALL BE REMOVED TO THE LIMITS OF CONSTRUCTION IN EXCAVATION SECTIONS AND PLUGGED AS SHOWN. IN EMBANKMENT SECTIONS "ABANDONED" SANITARY SEWER LINES (UNLESS OTHERWISE NOTED ON PLANS) AND WATER LINES "PLACED OUT OF SERVICE" SHALL BE PLUGGED AT BOTH ENDS. STORM SEWER, A PART OF WHICH WILL REMAIN IN SERVICE, SHALL BE PLUGGED AT THE R/W LINE. WHERE NOTED, THE EXISTING ABANDONED SANITARY SEWER LINES SHALL BE COMPLETELY FILLED WITH CLSM.

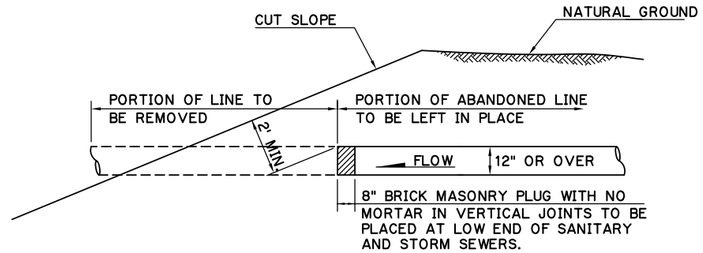

METHOD OF PLUGGING ABANDONED PIPE LINES

(COST OF PLUGGING SHALL BE INCLUDED IN THE UNIT PRICE BID ON OTHER ITEMS OF WORK.)

GENERAL NOTES

1. ALL MATERIALS REMOVED SHALL BECOME THE PROPERTY OF THE CONTRACTOR, UNLESS SPECIFICALLY NOTED OTHERWISE.
2. CLASS 'C' CONCRETE SHALL BE PLACED IN THE BOTTOM OF EACH MANHOLE AS SHOWN. MANHOLE THEN SHALL BE REMOVED TO DEPTH SPECIFIED AND BACK-FILLED IN ACCORDANCE WITH SEC. 619, OR FILLED WITH BRICK, BROKEN CONCRETE AND LOOSE SAND IN A MANNER TO ELIMINATE ALL VOIDS IN A MANNER APPROVED BY THE ENGINEER. COST TO BE INCLUDED IN PRICE BID FOR CLASS 'C' CONCRETE.
3. PRICE BID SHALL INCLUDE, BUT IS NOT LIMITED TO, THE REMOVAL OF CURB, CURB & GUTTER, SIDEWALK, DRIVEWAYS, PAVEMENT SAWING, CONCRETE DITCH LINER, CONCRETE FLUMES, CONCRETE RUBBLE, CONCRETE DIVIDING STRIP, FOOTINGS, FOUNDATIONS, PITS, WING WALLS, STRUCTURES, STORM SEWERS, MANHOLES, PIPELINES, LIGHT POLES, FENCES, GUARDRAIL, POLES, SHEET METAL SIGNS, ETC., AND ANY OTHER NON-ORGANIC ITEM NOT SPECIFICALLY LISTED AS A REMOVAL PAY ITEM SHALL BE INCLUDED IN PRICE BID FOR REMOVAL OF STRUCTURES AND OBSTRUCTIONS.
4. INTEGRAL CURB REMOVED W/CONCRETE PAVING SHALL BE INCLUDED IN THE PRICE BID FOR REMOVAL OF CONCRETE PAVING S.Y.
5. ALL SALVAGE MATERIALS BELONGING TO THE CITY OF OKLAHOMA CITY SHALL BE DELIVERED TO THE OKC TRAFFIC OPERATIONS YARD. 1400 S. SHARTEL, OKLA. CITY, OK 405-297-2648
6. CONCRETE RAIL REMOVED WITH EXISTING RETAINING WALL SHALL BE INCLUDED IN THE PRICE BID FOR REMOVAL OF RETAINING WALL L.F..

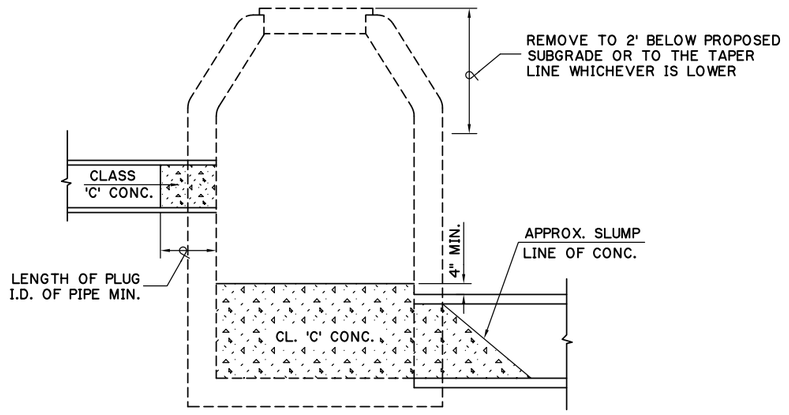

DETAIL OF REMOVAL OF MANHOLES, JUNCTION BOXES & INLETS

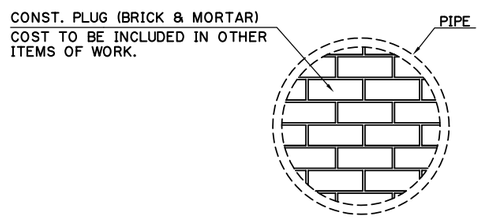

DETAIL OF TEMPORARY PIPE PLUG

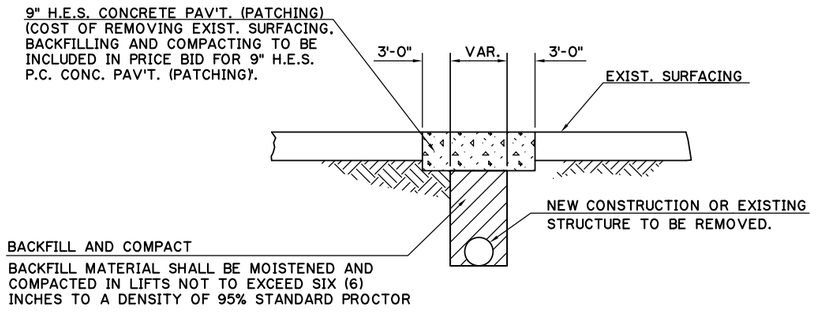

PATCHING DETAIL

(WHERE IT IS NECESSARY TO CUT EXISTING SURFACING FOR REMOVAL OR CONSTRUCTION OF AN UNDERGROUND FACILITY)

Design		
Drawn		
Checked		
Approved		
Squad	POE	

REMOVAL SUMMARY AND DETAILS

State Job No. 09032(17) Sheet No. 48

SEPT 08, 2016 - 20:12:13
H:\PROJECTS\2789_CrossRoads_InterX_New\PHASE IA\Roadway\Drawings\2789-PHASE1A-SUMREMOVAL.DWG

FED. ROAD DIST. NO.	STATE	PROJ. NO.	FISCAL YEAR	SHEET NO.	TOTAL SHEETS
6	OKLA.				

REVISIONS	
DESCRIPTION	DATE

SUMMARY OF SURFACING QUANTITIES (ROADWAY)

LOCATION STATION TO STATION	AGGREGATE BASE TYPE A	STABILIZED SUBGRADE	CEMENT TREATED BASE	SEPARATOR FABRIC	SEPARATOR FABRIC (15 OZ. / S.Y.) ▲	TRAFFIC BOUND SURFACE COURSE TYPE E	TACK COAT	SUPERPAVE TYPE S3 (PG 76-28 OK)	SUPERPAVE TYPE S3 (PG 64-22 OK)	SUPERPAVE TYPE S4 (PG 76-28 OK)	COLD MILLING PAVEMENT	P.C. CONCRETE PAVEMENT (PLACEMENT)	DOWEL JOINTED P.C.C PAVEMENT (PLACEMENT)	P.C. CONCRETE FOR PAVEMENT	SLOPE WALL (5")	CONCRETE CURB (4" MNTBLE -INTEGRAL)	CONCRETE CURB (6" BARRIER -INTEGRAL)	2'-8" COMB. CURB & GUTTER (4" MNTBLE)	4" CONCRETE SIDEWALK	4" CONCRETE DIVIDING STRIP	6" CONCRETE DIVIDING STRIP	2'-8" CONC. CURB & GUTTER (6" BARRIER)	TACTILE WARNING DEVICE-NEW
	C.Y.	S.Y.	S.Y.	S.Y.	S.Y.	TON	GAL.	TON	TON	TON	S.Y.	S.Y.	S.Y.	C.Y.	S.Y.	L.F.	L.F.	L.F.	S.Y.	S.Y.	S.Y.	L.F.	S.F.
I-240 EASTBOUND																							
STA. 402+00.00 TO STA. 405+00.00	165.68	745.56		745.56			223.67	125.26	375.78	102.66	135.00												
STA. 405+00.00 TO STA. 420+00.00	1017.52	4917.72		4917.72		1288.62	1240.20	688.28	2102.41	455.47													
RAMP G																							
STA. 403+46.03 TO STA. 418+00.00	935.90	4211.56		4211.56			1093.95	581.00	1996.14	387.41													
STA. 418+00.00 TO STA. 433+00.00	465.10	8106.79	6798.45	8106.79	6418.21	549.00	244.92	133.83	428.14	89.24		1599.55	4675.11	1743.10		411.00		153.00					
STA. 433.00 TO STA. 447+61.27	1463.37	4390.11	4390.11	4390.11	4390.11							2008.22	2238.34	1179.69	168.23					429.50			
S.W. SERVICE RD.																							
STA. 54+39.73 TO STA. 68+00.00		5241.34	5241.34		5241.34								4989.12	1247.28			753.40		424.14	264.56	55.00		65.00
STA. 68+00.00 TO STA. 82+00.00		4874.12	4874.12		4874.12								4251.89	1062.98			2734.00		794.67		40.11		
STA. 82+00.00 TO STA. 97+00.00		5222.22	5222.22		5222.22								4555.56	1138.89			2629.60		757.34				
STA. 97+00.00 TO STA. 105+22.20		2929.69	2929.69		2929.69								2557.23	639.31			1176.10		405.79				30.00
RAMP M																							
STA. 430+00.00 TO STA. 435+39.70		1271.67	1271.67		1271.67								1209.89	302.48	31.56		278.00						
RAMP C																							
STA. 0+36.38 TO STA. 3+58.52 & STA. 88+89.63 TO STA. 94+13.47	696.33	2540.69	2196.14	2023.38	313.00	597.33							1239.11	557.92				146.80			14.00	146.80	
TEMPORARY CONNECTION																							
EASTBOUND STA. 404+42.30 TO STA. 407+32.00							110.57		247.68	82.58													
TOTAL	4743.90	44451.47	32923.74	24395.12	30660.36	2434.95	2913.31	1528.37	5150.15	1117.36	135.00	3607.77	25716.25	7871.65	199.79	411.00	7571.10	299.80	2381.94	694.06	109.11	146.80	95.00

▲ QUANTITIES SHOWN ARE FOR INFORMATIONAL PURPOSES ONLY. COST OF THESE ITEMS ARE INCLUDED IN OTHER ITEMS OF BID.

Design		
Drawn		
Checked		
Approved		
Squad	POE	

SUMMARY OF SURFACING QUANTITIES

State Job No. 09032(17) Sheet No. 49

SEPT 08, 2016 - 19:45:44
H:\PROJECTS\2789_CrossRoads_InterX_New\PHASE IA\Roadway\Drawings\2789-PHASE 1A_SUM SURFQUANT.DWG

REVISIONS	
DESCRIPTION	DATE

SUMMARY OF TEMPORARY SEDIMENT CONTROL

STATION LOCATION	221(C) SILT FENCE	221(F) SILT DIKE	221(G) ROCK FILTER DAM (TYPE 4)	221(H) TEMP. INLET SEDIMENT FILTER	221(K) TEMP. FIBER LOG	233(A) VEGETATIVE MULCHING
	L.F.	L.F.	C.Y.	EA.	L.F.	ACRE
I-240						
STA. 390+00.00 TO STA. 405+00.00	535			28	96	0.05
STA. 405+00.00 TO STA. 420+00.00	2830	60	10.15	40	60	1.73
STA. 420+00.00 TO STA. 435+00.00	865	140	2.10	2	940	3.95
I-35						
STA. 52+47.40 TO STA. 57+00.00	540			18		0.12
STA. 57+00.00 TO STA. 72+00.00	1375			52	305	1.21
STA. 72+00.00 TO STA. 78+63.62	845	80		16	665	2.72
TOTALS:	6990	280	12.25	156	2066	9.78

SUMMARY OF EROSION CONTROL

STATION LOCATION	230(A) SLAB SODDING	FERTILIZING (10-20-10)	FERTILIZING (18-46-0)	WATERING	241 MOWING	601(A) TYPE 1 PLAIN RIPRAP
	S.Y.	TON	TON	M-GAL.	ACRES	TON
I-240 STA. 402+00.00 TO 420+00.00	4015	0.40	0.06	321.2	0.83	
SW SERV. ROAD STA. 54+39.73 TO 105+00.00	13763	1.38	0.21	1101.0	2.84	
RAMP G STA. 403+46.03 TO 447+61.27	17812	1.78	0.28	1425.0	3.68	208
RAMP M STA. 425+30.67 TO 435+39.40	995	0.10	0.02	79.6	0.21	
RAMP C TEMP. CONN. STA. 0+00.00 TO STA. 3+58.52	2254	0.23	0.04	180.3	0.47	
RAMP C STA. 88+89.63 TO STA. 94+13.47	457	0.05	0.01	36.6	0.09	
CHANNEL 'A' STA. 15+85.00 TO STA. 18+70.00	2600	0.26	0.04	208.0	0.54	2017
TOTALS:	41896	4.20●	0.66●	3351.7 ●	8.66	2225

● FOR INFORMATIONAL PURPOSES ONLY, COSTS TO BE INCLUDED IN OTHER ITEM OF BID. SEE SUMMARY OF PAY QUANTITIES (ROADWAY).

CONSTRUCTION NOTES

NO ERODIBLE EXPOSED AREAS WILL BE LEFT BARE OVER AN EXTENDED PERIOD OF TIME. AND THE ENGINEER WILL HAVE THE AUTHORITY TO DIRECT THE CONTRACTOR TO SHAPE AND FINISH ANY AREA AND TO BEGIN REPLACEMENT OF TOPSOIL AND THE SOLID SLAB SOD AS SOON AS PRACTICAL ON THE FINISHED SLOPES.

PERMANENT EROSION CONTROL (VEGETATIVE ITEM)

THE PERMANENT EROSION CONTROL VEGETATIVE ITEM IS SOLID SLAB SODDING. THE PERMANENT ITEM SHALL BE CONSTRUCTED ONLY DURING THE SEASONAL PERIOD SHOWN ON THE PLANS, AS CUT AND FILL SECTIONS ARE BROUGHT TO GRADE AND CONSTRUCTED TO THE LINES AND DIMENSIONS SHOWN ON TYPICAL SECTIONS. THE SALVAGED TOPSOIL SHALL BE PROMPTLY REPLACED AND FINISHED. IMMEDIATELY AFTER REPLACEMENT OF THE TOPSOIL, THE PERMANENT EROSION CONTROL ITEM SPECIFIED FOR EACH PARTICULAR AREA SHALL BE CONSTRUCTED. IF IN ACCORDANCE WITH SEASONAL LIMITATIONS, AS SHOWN ON THE PLANS. THIS WORK SHALL BEGIN PROMPTLY AND SHALL PROCEED WITHOUT UNDUE DELAY UNTIL COMPLETED OR UNTIL INTERRUPTED BY THE "OUT OF SEASON PERIOD". CONSTRUCTION OF THE ITEM SHALL BE RESUMED IMMEDIATELY WITH THE BEGINNING OF THE "IN SEASON PERIOD" FOR THAT PARTICULAR ITEM. THE PERMANENT EROSION CONTROL ITEM SPECIFIED FOR THE VARIOUS AREAS SHALL ALSO BE CONSTRUCTED ON THE AREAS THAT HAVE BEEN PREVIOUSLY TREATED WITH TEMPORARY ITEMS, AND THIS WORK SHALL BEGIN IMMEDIATELY WITH THE BEGINNING OF THE "IN SEASON PERIOD" FOR THE PERMANENT ITEM AND CONTINUE UNTIL COMPLETED OR UNTIL INTERRUPTED BY THE "OUT OF SEASON PERIOD".

ALL SLAB SODDING TO BE BERMUDA ONLY.

TEMPORARY EROSION CONTROL

THE TEMPORARY VEGETATIVE EROSION CONTROL IS SLAB SODDING. IT SHALL BE APPLIED ON ALL CUTS, FILLS, AND DISTURBED ERODIBLE AREAS IN LIEU OF THE PERMANENT ITEM THAT WAS HELD UP OR INTERRUPTED BY SEASONAL LIMITATIONS. THIS WORK SHALL BEGIN IMMEDIATELY AFTER REPLACEMENT OF TOPSOIL, OR AS OTHERWISE DIRECTED BY THE ENGINEER.

SUMMARY OF GRADING ESTIMATE

STATION LOCATION	202(A) UNCL. EXCAV. *	EMB.+15%	202(D) UNCL. BORROW	EXCESS EXCAV.	205(A)▲ TYPE 'A' SALVAGE TOPSOIL (REQUIRED)
	C.Y.	C.Y.	C.Y.	C.Y.	C.Y.
I-240 STA. 402+00.00 TO 420+00.00	6146	4865		0 (1)	379
SW SERV. ROAD STA. 54+39.73 TO 105+00.00	12584	10237		0(1)(2)	2411
RAMP G STA. 403+46.03 TO 447+61.27	20690	23773	0 (1)		3694
RAMP M STA. 425+30.67 TO 435+39.40	162	11994	11287 (2)		447
RAMP C TEMP. CONN. STA. 0+00.00 TO STA. 3+58.52	2858	20		2838	170
RAMP C STA. 88+89.63 TO STA. 94+13.47	6170			6170	152
CHANNEL 'A' STA. 15+85.00 TO STA. 18+70.00	3708	483		3225	361
TOTAL:	52318	51372	11287	12233	7614

▲ TOPSOIL SHALL BE PAID FOR AS A LUMP SUM QUANTITY.

(1) 1281 C.Y. EXCESS EXCAVATION FROM I-240 CONSTRUCTION TO BE USED TO REDUCE UNCL. BORROW ON RAMP G.
1802 C.Y. EXCESS EXCAVATION FROM SW SERV. ROAD CONSTRUCTION TO BE USED TO REDUCE UNCL. BORROW ON RAMP G.

(2) 545 C.Y. EXCESS EXCAVATION FROM I-240 CONSTRUCTION TO BE USED TO REDUCE UNCL. BORROW ON RAMP M.

SUMMARY OF DISTURBED DRAINAGE AREAS

D.A. NO.	OUTFALL STATION	DESCRIPTION	AREA ACRES	AREA SEDIMENT CONTROL MEASURES	STANDARDS/ SPECIAL DETAILS
D 1	5'x 4' RCB APPROX. 500' W. OF SANTA FE VIA EX. 4'x 4' RCB	SHEET RUNOFF TO EXIST. & PROPOSED STORM SEWER INLETS	1.41	SILT FENCE, TEMP. SED. FLTR. & TEMP. INLET SED. FLTR.	SSS-1. TSC2-3, TRFD-1 & DET. SHT. NO.
D 2	CL SWSR STA. 93+04.50 STR. CD1 2-8' X 4' RCB EXTENTION	SHEET RUNOFF TO PROPOSED TEMP. DITCH AND EXIST. & PROPOSED STORM SEWER INLETS	5.59	SILT FENCE, SILT DIKE, TEMP. SED. FLTR. & TEMP. INLET SED. FLTR.	SSS-1. TSC2-3, TSD-2, TRFD-1 & DET. SHEET NO.
D 3	CL I-240 STA. 419+64.43 STR. CD2 2-10' X 5' RCB & EXIST. RCB UNDER I-240	SHEET RUNOFF TO PROPOSED TEMP. DITCH AND EXIST. & PROPOSED STORM SEWER INLETS	16.45	SILT FENCE, SILT DIKE, TEMP. SED. FLTR., FLTR. LOG & TEMP. INLET SED. FLTR.	SSS-1. TSC2-3, TSD-2, TFL-1, TRFD-1 & DET. SHT NO.
		TOTAL	23.45		

Design		
Drawn		
Checked		
Approved		
Squad	POE	

SCHEDULES & SUMMARIES
SHEET 1 OF 2

State Job No. 09032(17) Sheet No. 50

SEPT 08, 2016 - 13:31:28
H:\PROJECTS\2789_CrossRoads_InterX_New\PHASE IA\Roadway\Drawings\2789-PHASE 1A_SUM MISC.DWG

REVISIONS		
	DESCRIPTION	DATE
1	ADDED DR.. MOD. TOTAL	09/23/16

SCHEDULE OF PAVED DITCHES

LOCATION STATION TO STATION	LENGTH	CLASS "C" CONCRETE				REMARKS
		BOTTOM WIDTH	NO. OF CURTAIN WALLS	CLASS "C" CONC.	DESIGN NO.	
	L.F.	L.F.		C.Y.		
S.W. SERVICE RD.						
STA. 54+39.73 TO STA. 59+00.00 RT.	460.27	2	6	24.38	1	RETAINING WALL 'A'
STA. 96+19.57 TO STA. 105+06.69 RT.	887.12	2	10	46.89	1	RETAINING WALL 'E'
RAMP 'M'						
STA. 428+77.56 TO STA. 430+20.00 LT.	142.44	2	3	7.62	1	RETAINING WALL 'A'
TOTAL				78.89		

SCHEDULE OF WHEEL CHAIR RAMPS

LOCATION (SEE DETAIL BELOW)	NO.	TYPE	REMARKS
S. W. SERV. RD. STA. 59+88.48 LT.	1		AT DRIVEWAY
S. W. SERV. RD. STA. 62+14.10 LT.	2		AT DRIVEWAY
S. W. SERV. RD. STA. 63+46.37 LT.	2		AT DRIVEWAY
S. W. SERV. RD. STA. 66+43.58 LT.	2	A	
S. W. SERV. RD. STA. 67+21.68 LT.	2		AT DRIVEWAY
S. W. SERV. RD. STA. 69+75.00 LT.	2		AT DRIVEWAY
S. W. SERV. RD. STA. 74+60.50 LT.	2		AT DRIVEWAY
S. W. SERV. RD. STA. 82+69.50 LT.	1		AT DRIVEWAY
S. W. SERV. RD. STA. 82+85.80 LT.	1	C	
S. W. SERV. RD. STA. 83+04.00 LT.	1		AT DRIVEWAY
S. W. SERV. RD. STA. 85+77.58 LT.	2		AT DRIVEWAY
S. W. SERV. RD. STA. 89+61.58 LT.	2		AT DRIVEWAY
S. W. SERV. RD. STA. 90+80.00 LT.	2		AT DRIVEWAY
S. W. SERV. RD. STA. 94+79.60 LT.	2		AT DRIVEWAY
S. W. SERV. RD. STA. 97+24.73 LT.	2		AT DRIVEWAY
S. W. SERV. RD. STA. 99+48.66 LT.	2	A	
S. W. SERV. RD. STA. 100+11.64 LT.	2		AT DRIVEWAY
S. W. SERV. RD. STA. 101+20.34 LT.	2		AT DRIVEWAY
S. W. SERV. RD. STA. 101+70.86 LT.	2		AT DRIVEWAY
S. W. SERV. RD. STA. 102+25.13 LT.	2		AT DRIVEWAY
S. W. SERV. RD. STA. 102+72.55 LT.	2		AT DRIVEWAY
S. W. SERV. RD. STA. 103+43.55 LT.	2		AT DRIVEWAY
S. W. SERV. RD. STA. 104+26.74 LT.	2		AT DRIVEWAY
S. W. SERV. RD. STA. 104+95.80 LT.	1	A	
S. W. SERV. RD. STA. 105+20.51 RT.	1	A	

SCHEDULE OF DRIVEWAYS

S.W. SERVICE ROAD LOCATION	TYPE	RADII		QUANTITY H.E.S. CONCRETE W.	L.	SQ.YD.	T.B.S.C. TON	2'-8" ■ CURB & GUTTER L.F.
S. W. SERVICE RD.								
STA. 59+88.48 13' LT.	2A	15'	10'	33'	13'	55.5		
STA. 62+14.10 13' LT.	2	30'	30'	23'	30'	119.6		
STA. 63+46.37 13' LT.	2	15'	15'	23'	20'	61.9		235
STA. 66+32.10 76' LT.	1	10'	10'	16'	45'	74.8		(1) 109
STA. 69+70.53 13' LT.	2	25'	25'	30'	23.2	110.1		
1 STA. 74+60.50 13' LT.	2	15'	15'	36'	17'	78.9		
STA. 82+69.50 13' LT.	2A	20'	5'	19'	42.5'	99.9		332
STA. 83+04.00 13' LT.	2A	5'	26'	19'	42.5'	106.5		
STA. 85+72.86 13' LT.	2	26'	26'	30'	42'	209.4		352
STA. 89+58.00 13' LT.	2	26'	26'	24'	42.5'	85.6		130
STA. 90+80.00 13' LT.	2	15'	15'	12'	20'	37.4		42
STA. 94+77.03 13' LT.	2	16'	22'	30'	23.5'	96.0		188
STA. 97+24.73 13' LT.	2	18'	20'	35'	20.4'	96.6		
STA. 100+11.64 13' LT.	2	15'	15'	18'	22'	54.8		122
STA. 101+20.34 13' LT.	2	15'	15'	18'	22'	54.8		32
STA. 101+70.86 13' LT.	2	15'	15'	24'	22.4'	70.5		108
STA. 102+25.13 13' LT.	1	10'	10'	10'	22.5'	9.5	3.0	
STA. 102+72.55 13' LT.	2	15'	15'	32'	22.6'	90.8		67
STA. 103+43.55 13' LT.	2A	15'	10'	34'	22.8'	93.9		78
STA. 104+26.74 13' LT.	2A	10'	15'	34'	23.2'	97.7		40
TOTALS						1704.2 (1)	3.0	1835

■ 6" BARRIER CURB

(1) INCLDES 70 L.F. CURB & GUTTER STA. 66+86.5 TO STA. 67+56.5 30' LT.

SCHEDULE OF FENCING

LOCATION STATION TO STATION	LENGTH	HEIGHT	STYLE	CLASS	GATES ◒ NUMBER	GATES ◒ SIZE	REMARKS
	L.F.	L.F.			EA.	FT.	
S. W. SERV. RD. STA. 68+43.74 TO STA. 77+00.00 RT.	864	6'	CLF	B			
S. W. SERV. RD. STA. 77+00.00 TO STA. 89+00.00 RT.	1214	6'	CLF	B			
S. W. SERV. RD. STA. 89+00.00 TO STA. 96+19.57 RT.	742	6'	CLF	B			
TOTALS	2820						

Design		
Drawn		
Checked		
Approved		
Squad	POE	

SCHEDULES & SUMMARIES
SHEET 2 OF 2

State Job No. 09032(17) Sheet No. 51

SEPT 23, 2016 - 15:55:14
H:\PROJECTS\2789__CrossRoads__InterX__New\PHASE IA\Roadway\Drawings\2789-PHASE 1A__SUM MISC.DWG

REVISIONS	
DESCRIPTION	DATE

SUMMARY OF MEDIAN BARRIER

LOCATION		504(E) 42" F-SHAPED PARAPET	509(A) CLASS AA CONC.	509(B) CLASS A CONC.	509(B) CLASS A CONC. (LONG. BAR. DES. 1-A)	511(A) REINF. STEEL	511(B) EPOXY COATED REINF. STEEL	627(A) CONC. LONG. BARRIER (DES. 1)	627(B) CONCRETE LONG. BAR. END SECTIONS	DESIGN ①	②	③	④	⑤	⑥	⑦	⑧
ALIGNMENT	STATION TO STATION	L.F.	C.Y.	C.Y.	C.Y.	LB.	LB.	L.F.	EA.	1	1A	FSB	FSB	TS	L.P. SUP	O.H. SIGN SUP	FSB P.P.
I-240 EB	402+00.00 TO 403+46.03	146.03										X					
RAMP 'G'	430+50.00 TO 444+61.03 RT	1106.05						331.24	1	X▲		X					
RAMP 'M'	430+00.00 TO 435+39.70	539.70		95.6			16904						X				
SW SERV. RD.	57+41.71 TO 63+83.28 RT	641.57		113.6			20095						X				
I-35 SB	52+47.40 TO 56+47.60 LT	400.20										X					
TEMP RAMP 'C'	1+00.00 TO 2+00.00 LT				25.3	2313			1		X						
	TOTALS	2833.55		209.2	25.3	2313	36999	331.24	2								

▲ COST CONSTRUCTION AND MATERIALS FOR TRANSITION FROM 42" F-SHAPED BARRIER TO DESIGN 1 LONGITUDINAL BARRIER TO BE INCLUDED IN THE PRICE BID FOR OTHER ITEMS OF WORK.

NOTE: FOR QUANTITIES NOT SHOWN SEE APPROPRIATE DETAIL SHEETS. SLIP FORM CONSTRUCTION WILL NOT BE ALLOWED FOR F-SHAPED BARRIER.

① DESIGN 1 LONGITUDINAL BARRIER - SEE ODOT STANDARD DRAWING CLB-1-2
② DESIGN 1A LONGITUDINAL BARRIER - SEE ODOT STANDARD DRAWING CLB-1-2
③ F-SHAPED PARAPET - SEE ODOT STANDARD DRAWING FSHP-42-2-00E
④ F-SHAPED PARAPET WITH MOMENT SLAB - SEE DETAIL SHEET NO. 52A
⑤ MEDIAN BARRIER TRANSITION - SEE DETAIL SHEET NO. 101A
⑥ MEDIAN BARRIER LIGHT POLE SUPPORT - SEE DETAIL SHEET NO. N/A
⑦ MEDIAN BARRIER OVERHEAD SIGN STRUCTURE SUPPORT - SEE DETAIL SHEET NO. N/A
⑧ F-SHAPED PARAPET - RETAINING WALL PROTECTION - SEE DETAIL THIS SHEET

SUMMARY OF PIPE EDGE DRAIN

LOCATION STATION TO STATION	EDGE DRAIN CONDUIT PERFORATED L.F.	EDGE DRAIN OUTLET LATERAL NON-PERFORATED L.F.	REMARKS
EAST BOUND I-240			
STA. 402+00.00 TO STA. 402+75.00 RT.	275		TIE INTO EDGE DRAIN EAST BOUND I-240 RT.
STA. 402+75.00 TO STA. 403+46.00 RT.	71		STUB INTO STRUCTURE 1
RAMP G			
STA. 403+46.00 TO STA. 404+00.00 RT.	54		STUB INTO STRUCTURE 2
STA. 404+00.00 TO STA. 408+00.00 RT.	400		STUB INTO STRUCTURE G27
STA. 408+00.00 TO STA. 411+00.00 RT.	300		STUB INTO STRUCTURE G26
STA. 411+00.00 TO STA. 414+25.00 RT.	325		STUB INTO STRUCTURE G25
STA. 414+25.00 TO STA. 419+53.17 RT.	529		STUB INTO STRUCTURE G24
STA. 431+73.03 TO STA. 431+75.00 RT.	2		STUB INTO STRUCTURE G15
STA. 431+75.00 TO STA. 433+00.00 RT.	125		STUB INTO STRUCTURE G15
STA. 433+00.00 TO STA. 434+34.53 RT.	135		STUB INTO STRUCTURE G14
STA. 434+34.53 TO STA. 436+10.05 RT.	176		STUB INTO STRUCTURE G13
STA. 436+10.05 TO STA. 438+34.58 RT.	225		STUB INTO STRUCTURE G12
STA. 438+34.58 TO STA. 440+50.00 RT.	216		STUB INTO STRUCTURE G11
STA. 440+50.00 TO STA. 442+00.00 RT.	150		STUB INTO STRUCTURE G9
STA. 442+00.00 TO STA. 443+50.00 RT.	150		STUB INTO STRUCTURE G8
STA. 443+50.00 TO STA. 444+83.20 RT.	134		STUB INTO STRUCTURE G7
STA. 444+83.20 TO STA. 445+89.98 RT.	107		STUB INTO STRUCTURE G7
STA. 445+89.98 TO STA. 446+43.88 RT.	54		STUB INTO STRUCTURE G6
STA. 446+43.88 TO STA. 447+61.27 RT.	118		STUB INTO STRUCTURE G2
SOUTH BOUND I-35			
STA. 52+47.40 TO STA. 52+75.00 LT.	28		STUB INTO STRUCTURE G1
STA. 52+75.00 TO STA. 53+47.60 LT.	73		TIE INTO EDGE DRAIN SOUTH BOUND RAMP G RT.
RAMP C			
STA. 0+80.44 TO STA. 2+36.38 LT.	156		TIE INTO LATERAL EDGE DRAIN OUTLET UNDER RAMP C
MISCELLANEOUS		100	
TOTALS:	3803	100	

NOTES:
1. ALL PERFORATED EDGE DRAIN SHALL BE FACTORY WRAPPED WITH SYNTHETIC FILTER FABRIC.
2. COST OF ALL FITTINGS, COUPLINGS, STUB-INS, STRUCTURAL OUTLETS AND TRENCHING SHALL BE INCLUDED IN THE PRICE BID FOR EDGE DRAIN OUTLET LATERAL NONPERFORATED PIPE.

SCHEDULE OF ELEVATIONS
DESIGN 1-A LONGITUDINAL BARRIER

STATION	GRADE ELEV. LEFT	GRADE ELEV. RIGHT	REMARKS
TEMP RAMP C LT			
1+00.00	1277.13	1279.53	MATCH EXIST. BARR.
1+50.00	1278.03	1278.11	
2+00.00	1277.45	1278.61	

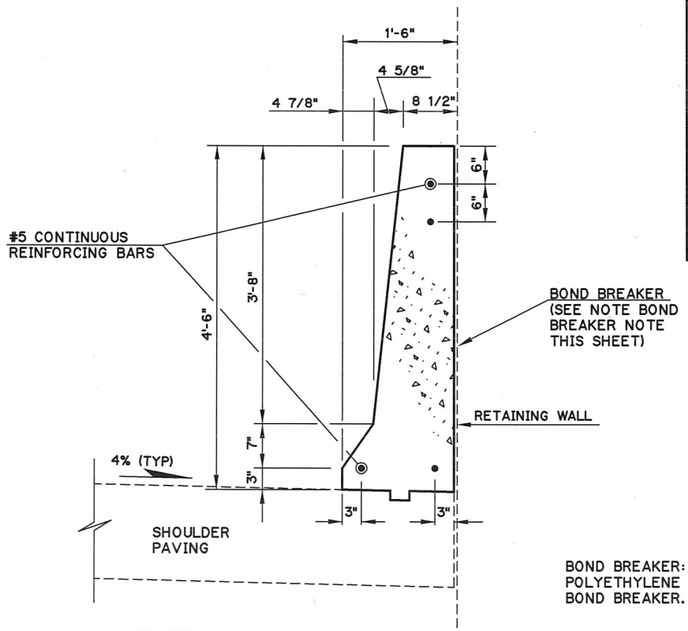

BOND BREAKER:
POLYETHYLENE SHEETING 6 MILS THICK OR 2 SHEETS 4 MILS THICK TO ACT AS A BOND BREAKER. COST TO BE INCLUDED IN OTHER ITEMS OF WORK.

TYPICAL SECTION THRU F-SHAPED BARRIER AT RETAINING WALL 'E2' & 'A'

THIS BARRIER BID AS: "42" F-SHAPED PARAPET" L.F.

Design		
Drawn		
Checked		
Approved		
Squad	POE	

LONGITUDINAL BARRIER SCHEDULES

State Job No. 09032(17) Sheet No. 52

SEPT 08, 2016 - 11:44:22
H:\PROJECTS\2789_CrossRoads_InterX_New\PHASE 1A\Roadway\Drawings\2789-PHASE1A-MBDES1A-SCHED.DWG

REVISIONS	
DESCRIPTION	DATE

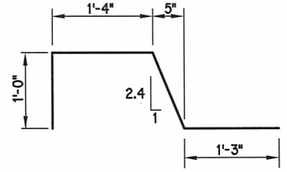

FT2 #5 x 5'-2"

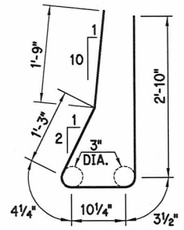

FS2 #5 x 7'-4"

※ SEE ODOT STANDARD FSHP-42-2-00E FOR EXPANSION, CONSTRUCTION, AND CONTROL CRACK JOINT LOCATIONS.

MOMENT SLAB TO BE PAID FOR AS CLASS A CONCRETE AND EPOXY COATED REINFORCING STEEL. FS2 BARS SHALL BE INCLUDED IN EPOXY COATED REINFORCING STEEL QUANTITY.

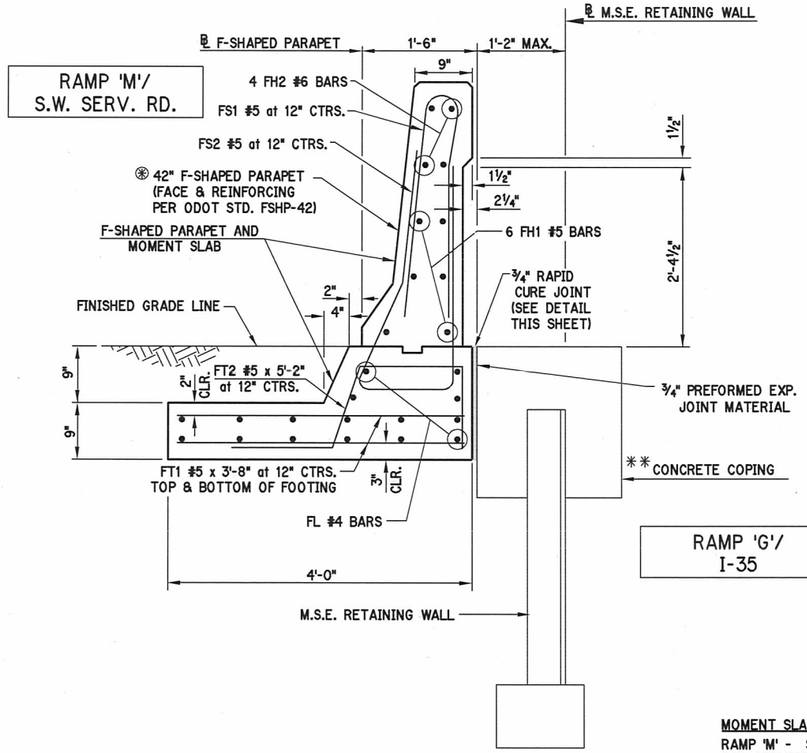

TYPICAL SECTION AT WALL 'A'

** DIMENSIONS FOR M.S.E. RETAINING WALL COPING WERE ASSUMED AND SHOULD BE VERIFIED IN THE FIELD. DIMENSIONS DIFFERENT THAN ASSUMED SHOULD NOT AFFECT DESIGN OR CONSTRUCTION OF THE F-SHAPED PARAPET AND MOMENT SLAB.

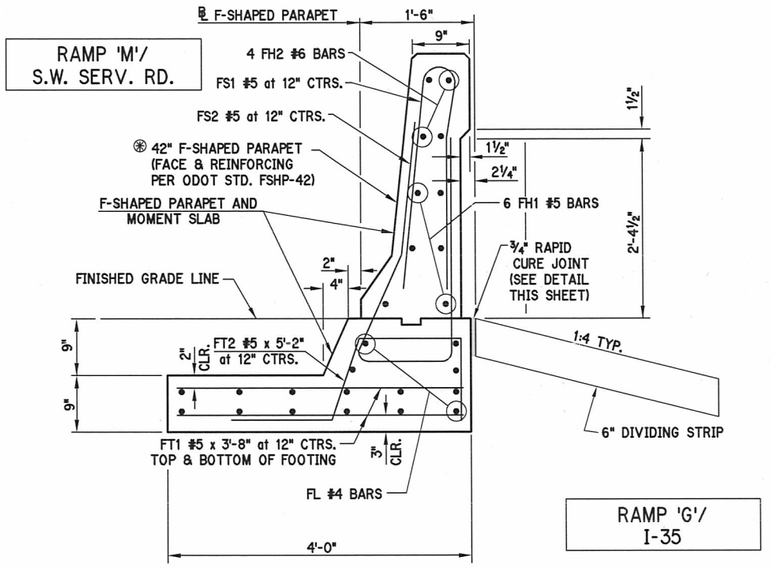

TYPICAL SECTION AT DIVIDING STRIP

MOMENT SLAB EXTENTS:
RAMP 'M' - STA. 430+00.00 TO STA. 435+39.70
S.W. SERVICE RD. - STA. 57+41.81 TO STA. 63+83.28

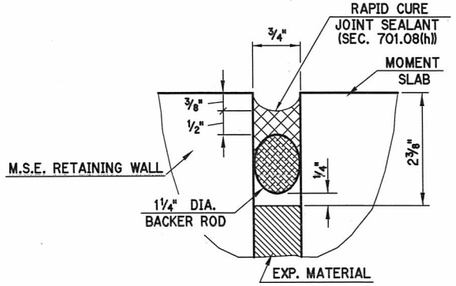

DETAIL OF RAPID CURE JOINT

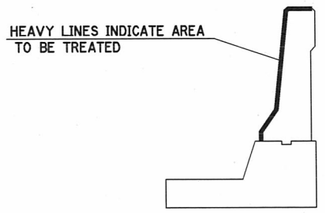

DETAIL OF PENETRATING WATER REPELLANT SURFACE TREATMENT

MOMENT SLAB QUANTITIES		
ITEM	UNIT	TOTAL
CLASS A CONCRETE	C.Y.	192
42" F-SHAPED PARAPET	L.F.	1181.20
* EPOXY COATED REINF. STEEL	LB.	28,025
WATER REPELLENT (VISUALLY INSPECTED)	S.Y.	576

* FS2 BARS INCLUDED IN QUANTITY.

OKLAHOMA COUNTY

Design		
Drawn		
Checked		
Approved		
Squad	POE	

F-SHAPED PARAPET AND MOMENT SLAB DETAILS

State Job No. 09032(17) Sheet No. 52A

SEPT 07, 2016 - 15:50:10
H:\PROJECTS\2789_CrossRoads_InterX_New\PHASE IA\Bridge\CADDrawings\1A Barriers\PH1A - PARAPET-MOMENTSLAB.DWG

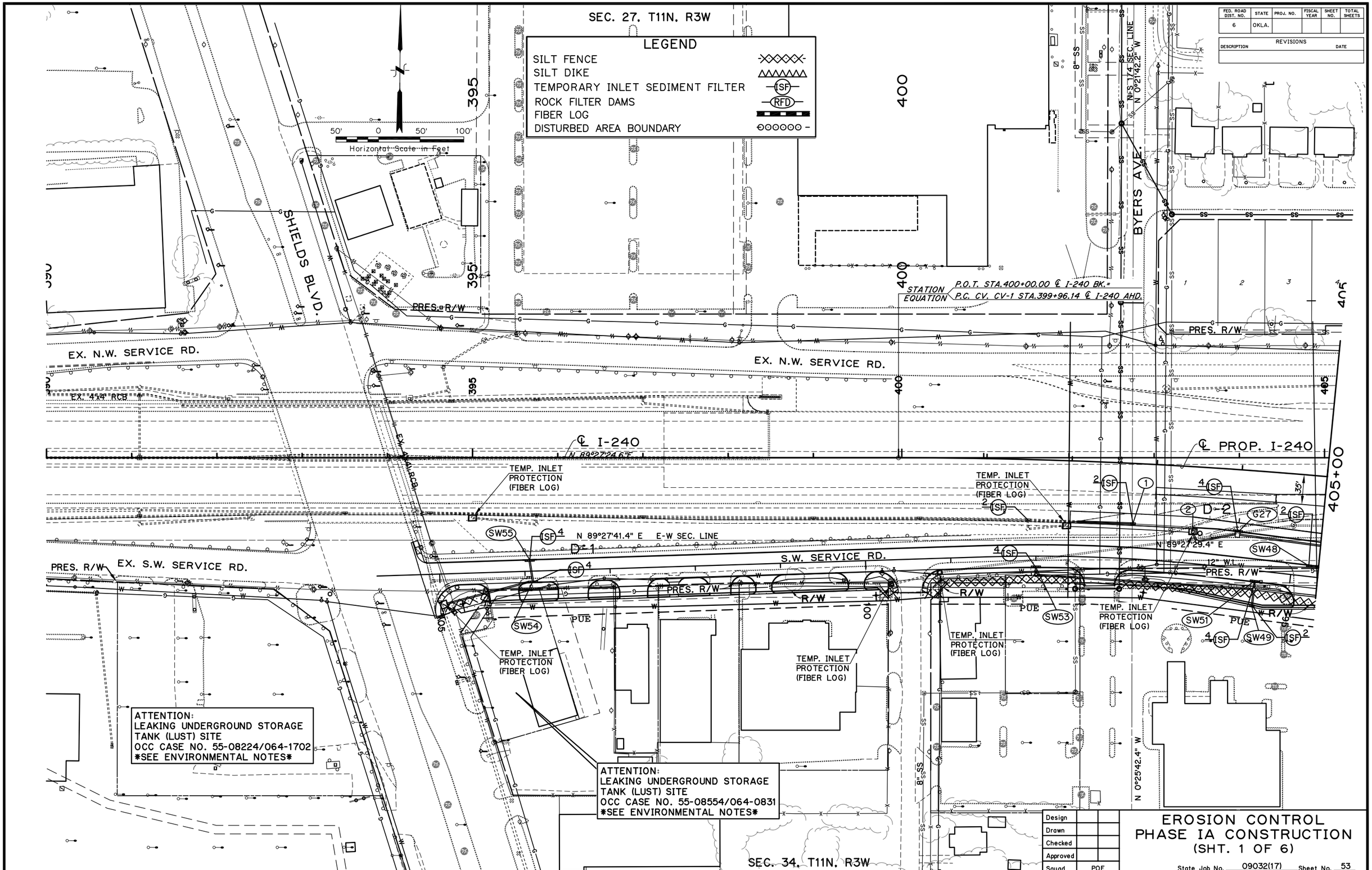

FED. ROAD DIST. NO.	STATE	PROJ. NO.	FISCAL YEAR	SHEET NO.	TOTAL SHEETS
6	OKLA.				

REVISIONS

DESCRIPTION	DATE

Design	
Drawn	
Checked	
Approved	
Squad	POE

EROSION CONTROL PHASE IA CONSTRUCTION (SHT. 1 OF 6)

State Job No. 09032(17) Sheet No. 53

SEPT 08, 2016 - 18:58:29
H:\PROJECTS\2789_CrossRoads_InterX_New\PHASE IA\Roadway\Drawings\2789-PHASE 1A_EROS CONTROL_I-240 1.DWG

REVISIONS	
DESCRIPTION	DATE

SEC. 27. T11N. R3W

CLOVERLEAF MANOR

PRES. R/W

GAS LINE

10" SS.

12" W.L.

EX. N.W. SERVICE RD.

8" SS

EX. CONC. MED. BARRIER

STATION EQUATION P.O.T. STA.415+08.92 ℄ PRESENT I-240 BK.=
P.O.T. STA.415+00.00 ℄ PRESENT I-240 AHD.

℄ PRESENT I-240

EX. OVERHEAD SIGN

E-W SEC. LINE
N 89°27'29.4"E

6" GAS

405+00

420+00

EX. CONC. MED. BARRIER

TEMP. INLET PROTECTION (FIBER LOG)

℄ PROP. I-240

EX. S.W. SERVICE RD.

PRES. R/W

D-2

D-3

S.W. SERVICE RD.

R/W

PUE

TEMP. INLET PROTECTION (FIBER LOG)

8'X4' RCB

6'X4' RCB

LEGEND

SILT FENCE	
SILT DIKE	
TEMPORARY INLET SEDIMENT FILTER	ISF
ROCK FILTER DAMS	RFD
FIBER LOG	
DISTURBED AREA BOUNDARY	

SEC. 34. T11N. R3W

50' 0 50' 100'
Horizontal Scale in Feet

Design		
Drawn		
Checked		
Approved		
Squad	POE	

EROSION CONTROL PHASE IA CONTRUCTION (SHT. 2 OF 6)

State Job No. 09032(17) Sheet No. 54

SEPT 08, 2016 - 19:02:05
H:\PROJECTS\2789_CrossRoads_InterX_New\PHASE IA\Roadway\Drawings\2789-PHASE 1A_EROS CONTROL_I-240 2.DWG

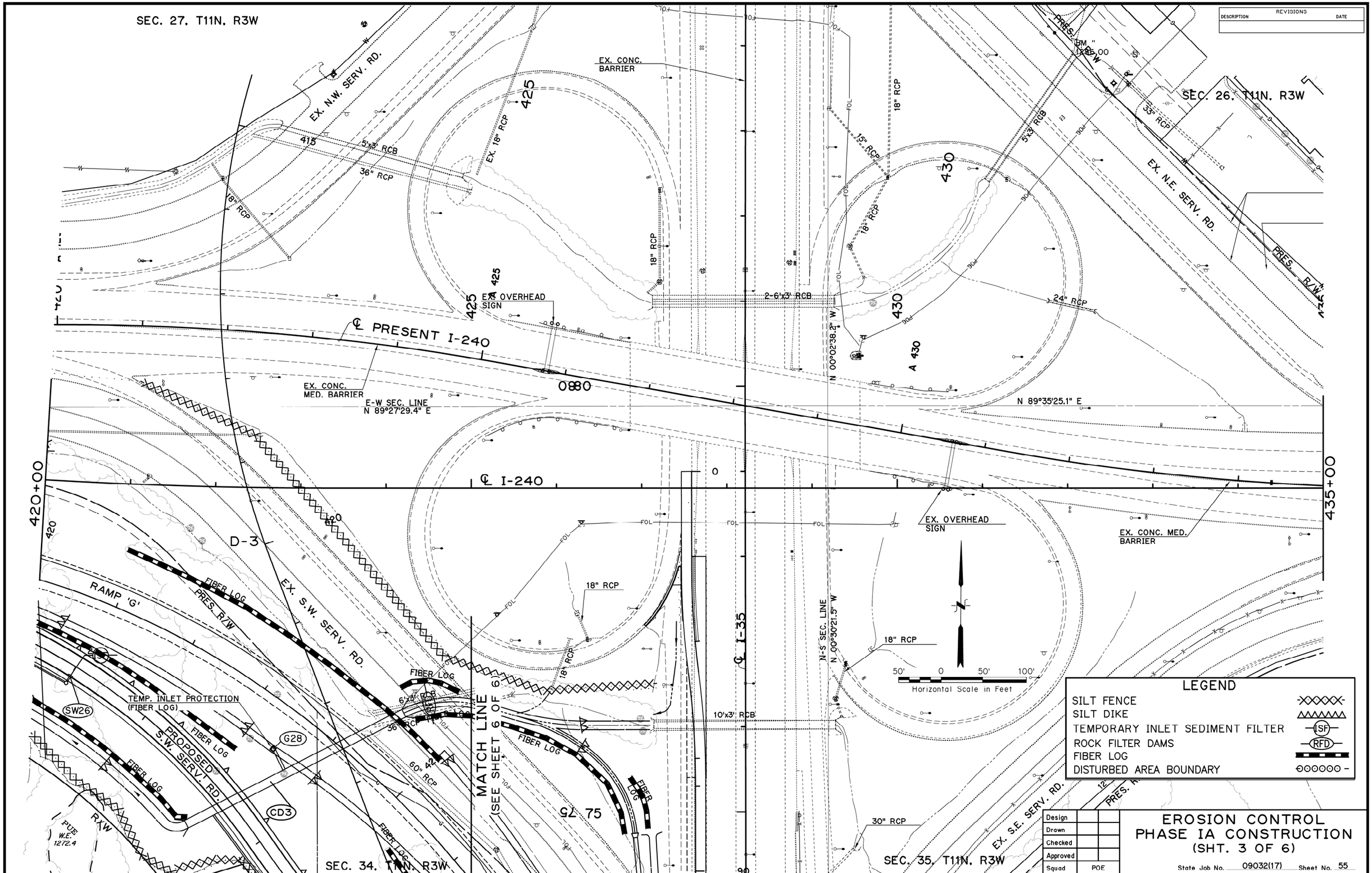

SEPT 08, 2016 - 19:04:31
H:\PROJECTS\2789_CrossRoads_InterX_New\PHASE IA\Roadway\Drawings\2789-PHASE 1A_EROS CONTROL_I-240 3.DWG

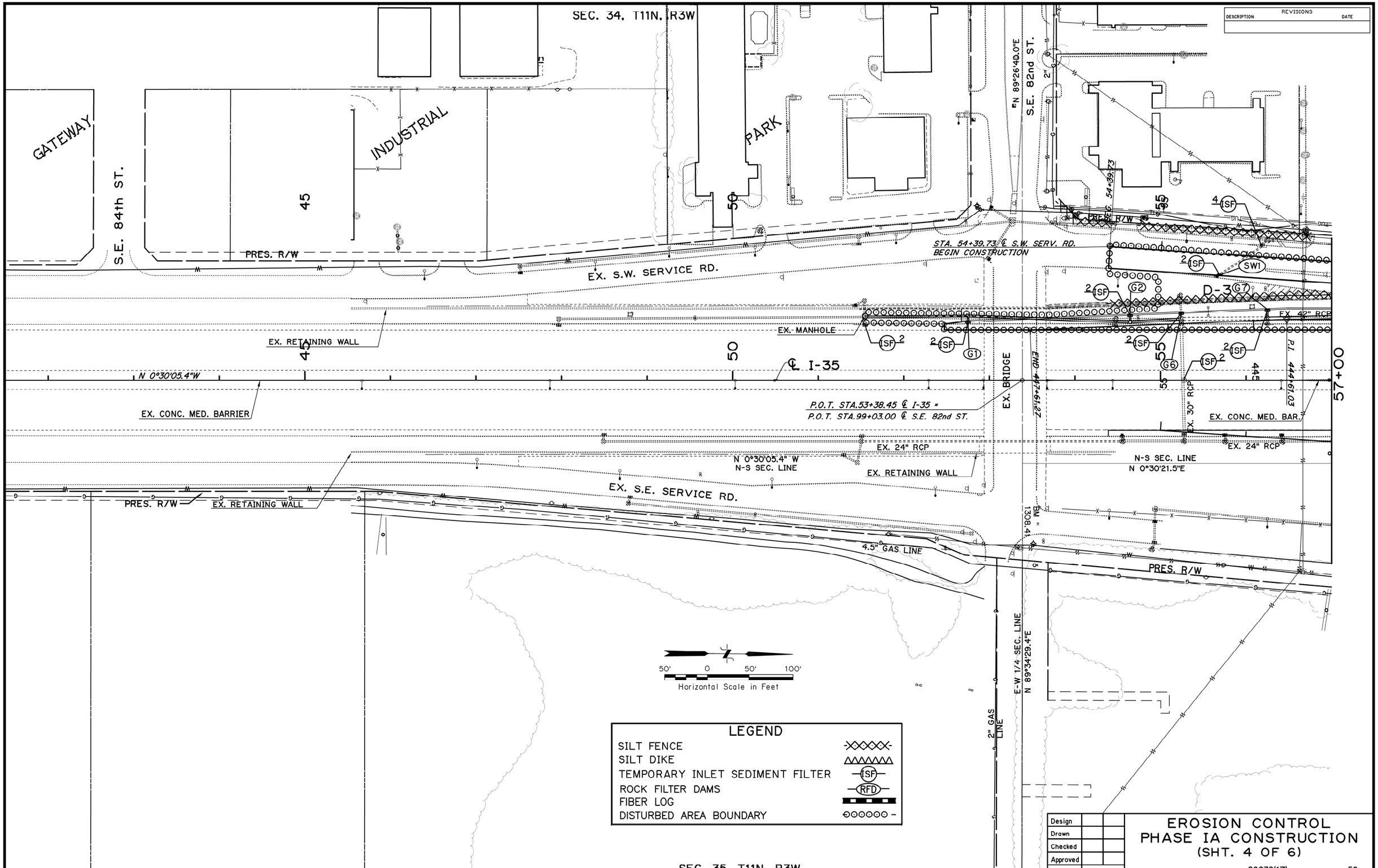

REVISIONS	
DESCRIPTION	DATE

Design	
Drawn	
Checked	
Approved	
Squad	POE

EROSION CONTROL PHASE IA CONSTRUCTION (SHT. 4 OF 6)

State Job No. 09032(17) Sheet No. 56

SEPT 08, 2016 - 19:06:28
H:\PROJECTS\2789_CrossRoads_InterX_New\PHASE IA\Roadway\Drawings\2789-PHASE 1A_EROS CONTROL_I-35 1.DWG

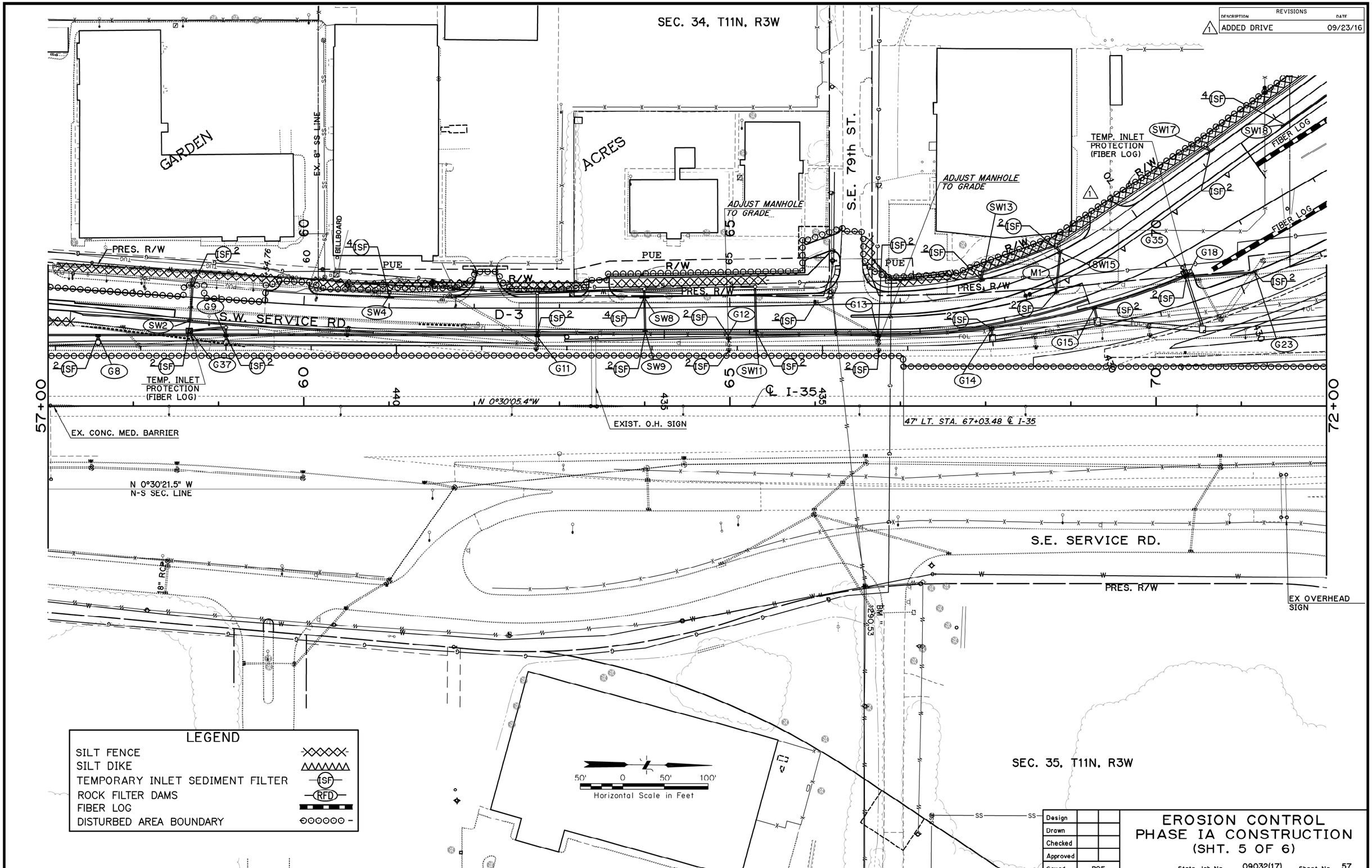

SEPT 23, 2016 - 15:47:05
H:\PROJECTS\2789_CrossRoads_InterX_New\PHASE IA\Roadway\Drawings\2789-PHASE 1A_EROS CONTROL_I-35 2.DWG

REVISIONS	
DESCRIPTION	DATE

SEC. 34, T11N, R3W

SEC. 27, T11N, R3W

SEC. 35, T11N, R3W

SEC. 26, T11N, R3W

MATCH LINE (SEE SHEET 3 OF 6)

MATCH LINE (SEE SHEET 3 OF 6)

TEMP. INLET PROTECTION (FIBER LOG)

FIBER LOG

PRES R/W

S.W. SERVICE RD.

N.W. SERVICE RD.

S.E. SERVICE RD.

N.E. SERVICE RD.

℄ I-240

℄ I-35

E-W SEC. LINE
S 89°27'29.4" W

N 0°30'05.4"W

N 0°30'21.5" W
N-S SEC. LINE

N 0°20'39.3"W

N-S SEC. LINE
N 0°20'38.2" W

S 89°35'25.1" W

76' LT. STA. 78+91.00
℄ I-35

47' LT. STA. 76+05.00 ℄ I-35

63' LT. STA. 78+63.62
℄ I-35 END CONST. FOR
TEMP. CONN. RAMP "C"

52' LT. STA. 78+00.00 ℄ I-35
END P.C. CONC. SHLDR.

OVERHEAD SIGN (TYP.)

EX. OVER HEAD SIGN

18" RCP

36" RCP

5x3 RCB

2-6'x3' RCB

10'x5' RCB

4'x3' RCB

6'x3' RCB

5x3 RCB

425

A425

A2825

430

A430

A3030

72+00

78+00

75

80

85

90

95

FOL

SF

RFD

LEGEND

SILT FENCE	-XXXXX-
SILT DIKE	
TEMPORARY INLET SEDIMENT FILTER	(SF)
ROCK FILTER DAMS	(RFD)
FIBER LOG	
DISTURBED AREA BOUNDARY	-OOOOOO-

50' 0 50' 100'
Horizontal Scale in Feet

Design		
Drawn		
Checked		
Approved		
Squad	POE	

EROSION CONTROL PHASE IA CONSTRUCTION (SHT. 6 OF 6)

State Job No. 09032(17) Sheet No. 58

SEPT 06, 2016 - 13:29:32
H:\PROJECTS\2789_CrossRoads_InterX_New\PHASE IA\Roadway\Drawings\2789-PHASE 1A_EROS CONTROL_I-35 3.DWG

SEC. 34, T11N, R3W

REVISIONS	
DESCRIPTION	DATE

SE. 82ND ST.

E-W 1/4 SEC. LINE
N 89°26'40.0" E

GARDEN ACRES

54+76.34 (195.7'
54+78.22 (164.6'
56+08.17 (173.9'
54+92.91 (102.9'
54+94.92 (73.3'
54+49.30 (70.2'
56+12.46 (110.8'
57+32.06 (60.9'
57+15.84 (301.6'
58+11.02 (310.7'
59+21.97 (164.1'
59+76.41 (175.6'
59+83.56 (76.9'
60+20.65 (330.5'
60+31.87 (59.4'
61+56.71 (333.2'
61+57.86 (62.0'
63+84.32 (88.5'
63+85.39 (151.1'
64+39.21 (187.3'
64+62.28 (162.9'
64+88.54 (149.4'
64+87.47 (86.6'

55 60 65

P.C. CV. SW-1
STA.59+68.56 ℄ S.W. SERVICE RD.

P.O.T. STA.59+54.73 ℄ S.W. SERVICE RD.

P.T. CV. SW-1
STA.61+57.54 ℄ S.W. SERVICE RD.

4' TEMP. CONST. EASEMENT FOR DRIVEWAY

PUE

42.29' LT.
+67.22
28.4' LT.
16'
+87
+39
16'
+27.24
29.91' LT.
+58.54
35.33' LT.
20'
20'

10' U/E
PRES. R/W
15' U/E
PRES. R/W
TOP OF CUT
R/W
PRES. R/W
10' U/E
PRES. R/W
35.33'

S.W. SERVICE RD.
N 03°16'40.93"E

CV. SW-1

N 0°30'05.4"W

N 01°38'50.2"W

65+00

(LEAVE)
EX. RETAINING WALL

℄ RAMP 'G'

RETAINING WALL "A"

P.I. STA.63+83.28 ℄ S.W. SERVICE RD.
Δ = 01°08'44.8"LT.

℄ I-35

NOTE:
FOR DRIVEWAY INFORMATION
SEE SCHEDULE OF DRIVEWAYS
SHEET NO. 51

RIGHT OF WAY STATIONS & OFFSETS ARE FROM S.W. SERVICE ROAD

N 0°30'21.5" W
N-S SEC. LINE

40' 0 40' 80'
Horizontal Scale in Feet

BM "
1308.41

SEC. 35, T11N, R3W

Design		
Drawn		
Checked		
Approved		
Squad	POE	

RIGHT-OF-WAY AND FENCING DETAILS

SHEET 1 OF 5

State Job No. 09032(17) Sheet No. 59

SEPT 08, 2016 - 19:03:35
H:\PROJECTS\2789_CrossRoads_InterX_New\PHASE IA\Roadway\Drawings\2789-PHASE 1A-ROW1.DWG

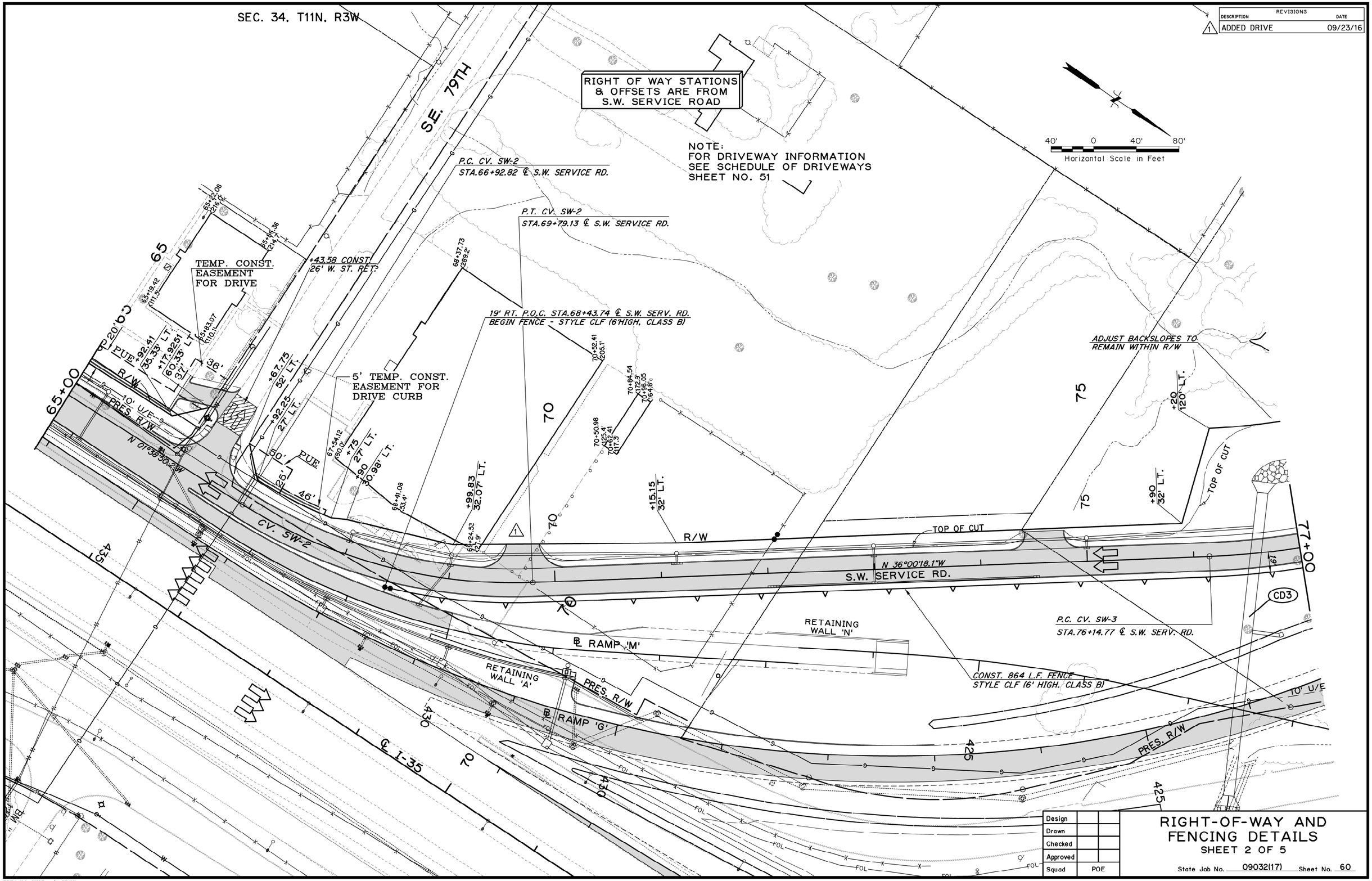

REVISIONS		
	DESCRIPTION	DATE
1	ADDED DRIVE	09/23/16

Design		
Drawn		
Checked		
Approved		
Squad	POE	

RIGHT-OF-WAY AND FENCING DETAILS

SHEET 2 OF 5

State Job No. 09032(17) Sheet No. 60

SEPT 23, 2016 - 15:42:26
H:\PROJECTS\2789_CrossRoads_InterX_New\PHASE IA\Roadway\Drawings\2789-PHASE 1A-ROW2.DWG

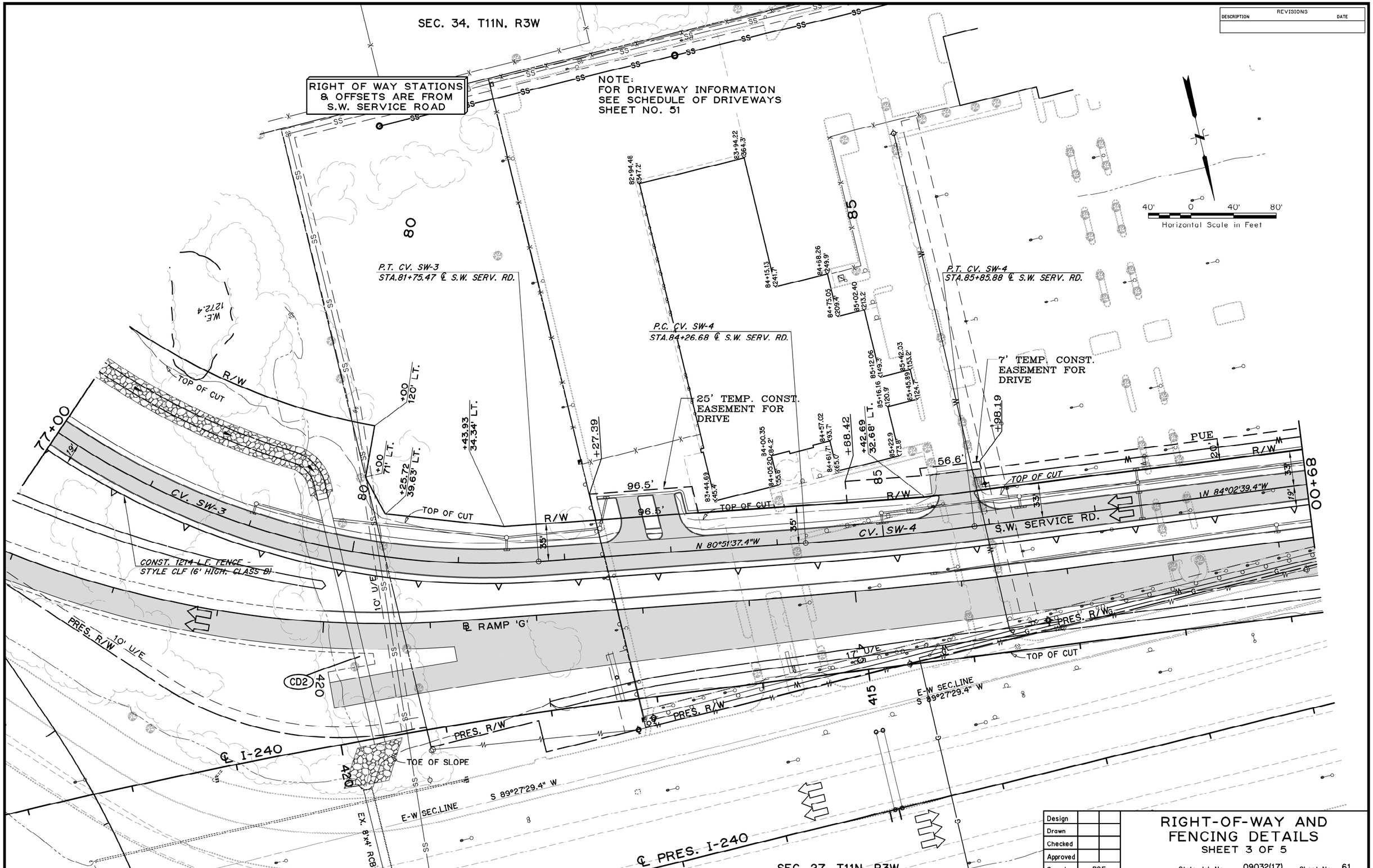

Design		
Drawn		
Checked		
Approved		
Squad	POE	

RIGHT-OF-WAY AND FENCING DETAILS

SHEET 3 OF 5

State Job No. 09032(17) Sheet No. 61

SEPT 08, 2016 - 19:14:04
H:\PROJECTS\2789_CrossRoads_InterX_New\PHASE IA\Roadway\Drawings\2789-PHASE 1A-ROW3.DWG

SEC. 34, T11N, R3W

REVISIONS	
DESCRIPTION	DATE

Horizontal Scale in Feet

7' TEMP. CONST. EASEMENT FOR DRIVE

10' U/E

25' U/E

10' U/E

R/W

PUE

TOP OF CUT

TOE OF SLOPE

CD1

TOE OF SLOPE

N 84°02'39.4"W
S.W. SERVICE RD.

PRES. R/W

PRES. R/W

P.C. CV. SW-5
STA.95+82.78 ℄ S.W. SERV. RD.

P.T. CV. SW-5
STA.98+59.38 ℄ S.W. SERV. RD.

N 0°42'42.4" W

S. STILES AVE.

+48.66 CONST. 28' W. ST. RETURN

17' U/E PUE

PRES. R/W

19' CV. SW-5

RET. WALL 'E2'

CONST. 742 L.F. FENCE - STYLE CLF (6' HIGH, CLASS B)

℄ I-240

℄ PRESENT I-240

℄ I-240

STA.96+19.57 ℄ S.W. SERV. RD. RT.
END FENCE

N.W. SERVICE RD.

N-S 1/4 SEC. LINE
N 0°21'42.2" W

RIGHT OF WAY STATIONS & OFFSETS ARE FROM S.W. SERVICE ROAD

NOTE:
FOR DRIVEWAY INFORMATION SEE SCHEDULE OF DRIVEWAYS SHEET NO. 51

SEC. 27, T11N, R3W

Design			
Drawn			
Checked			
Approved			
Squad	POE		

RIGHT-OF-WAY AND FENCING DETAILS

SHEET 4 OF 5

State Job No. 09032(17) Sheet No. 62

SEPT 08, 2016 - 19:41:36
H:\PROJECTS\2789_CrossRoads_InterX_New\PHASE IA\Roadway\Drawings\2789-PHASE 1A-ROW4.DWG

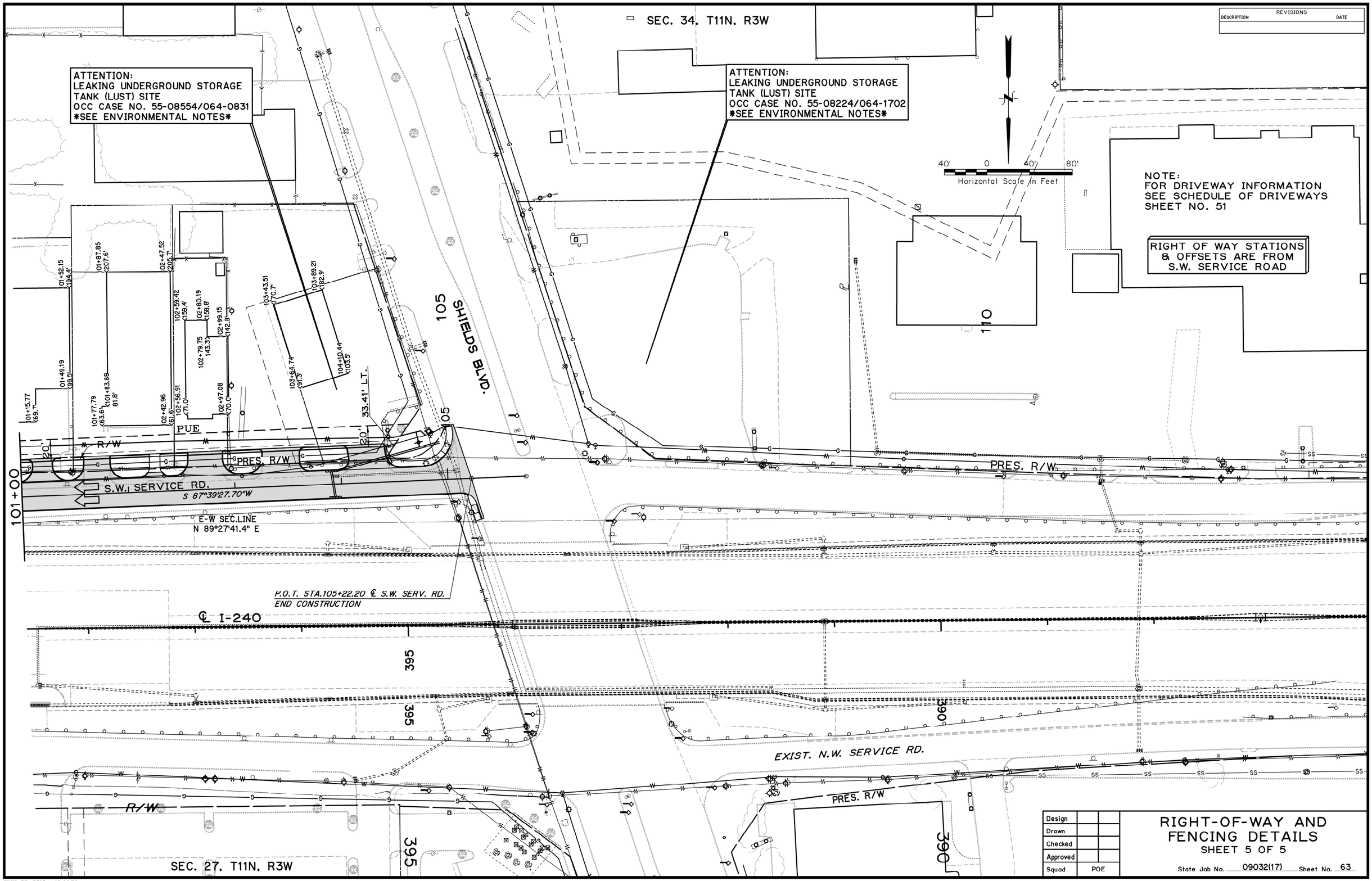

REVISIONS	
DESCRIPTION	DATE

Design		
Drawn		
Checked		
Approved		
Squad	POE	

RIGHT-OF-WAY AND FENCING DETAILS

SHEET 5 OF 5

State Job No. 09032(17) Sheet No. 63

SEPT 08, 2016 - 19:44:23
H:\PROJECTS\2789_CrossRoads_InterX_New\PHASE IA\Roadway\Drawings\2789-PHASE 1A-ROW5.DWG

SEC. 27. T11N. R3W

REVISIONS

DESCRIPTION	DATE

REMOVAL LEGEND

- ASPHALT REMOVAL
- CONCRETE REMOVAL
- CONC. SLOPEWALL REMOVAL
- COLD MILLING

REMOVAL TOTALS THIS SHEET

3,869	S.Y. ASPHALT PAVEMENT
520	S.Y. ASPHALT DRIVEWAY
908	S.Y. CONCRETE DRIVEWAY
245	S.Y. CONCRETE SLOPEWALL
1,782	S.Y. CONCRETE DIVIDING STRIP
2,384	L.F. CONC. CURB & GUTTER
957	L.F. SAWCUT

50' 0 50' 100'
Horizontal Scale in Feet

395

400

SHIELDS BLVD.

BYERS AVE.

6" GAS LINE

8" SS

N 0°21'42.2" W

PRES. R/W

6" GAS LINE

12" W.L.

18" RCP

EX. N.W. SERVICE RD.

STATION EQUATION P.O.T. STA.400+00.00 ℄ I-240 BK.=
P.C. CV. CV-1 STA.399+96.14 ℄ I-240 AHD.

1 2 3 4

343 L.F. SAWCUT

COLD MILL 138 S.Y.

REMOVE 1,787 S.Y. CONC. DIVIDING STRIP

℄ PROP. I-240

REMOVE 3,869 S.Y. ASPHALT PAVEMENT

REMOVE 119 S.Y. CONC. SLOPEWALL

35'

43'

390+00

405+00

REMOVE & RECONSTRUCT 150 L.F. GUARD RAIL

℄ I-240

N 89°27'24.6"E

REMOVE 126 S.Y. CONC. SLOPEWALL

REMOVE 1,089 L.F. CONC. CURB & GUTTER

EX. PAVED DITCH (LEAVE)

E-W SEC. LINE

N 89°27'41.4" E

N 89°27'29.4" E

PLUG

93 L.F. SAWCUT

36" RCP (LEAVE)

(REMOVE) 18" RCP

REMOVE INLET & 100 L.F. 18" RCP

EX. S.W. SERVICE RD.

REMOVE INLET

18" RCP

12" W.L.

PRES. R/W

6" GAS LINE

EX. GUARD RAIL (REMOVE)

ADJUST INLET TO GRADE

R/W

PUE

293 L.F. SAWCUT

REMOVE 347 S.Y. ASPHALT DRIVEWAY

REMOVE 146 S.Y. CONCRETE DRIVEWAY

REMOVE 240 S.Y. CONCRETE DRIVEWAY & 154 L.F. SAWCUT

REMOVE 590 L.F. CONC. CURB & GUTTER

REMOVE 173 S.Y. ASPHALT DRIVEWAY

EX. GUARD RAIL (REMOVE)

REMOVE 264 L.F. CONC. CURB & GUTTER

REMOVE INLET

REMOVE 441 L.F. CONC. CURB & GUTTER

REMOVE MANHOLE & 505 L.F. 18" RCP

168 L.F. SAWCUT

23 L.F. SAWCUT

REMOVE 152 S.Y. CONCRETE DRIVEWAY & 37 L.F. SAWCUT

37 L.F. SAWCUT

REMOVE 370 S.Y. CONC. DRIVEWAY & PARKING AREA & 192 L.F. SAWCUT

6" GAS LINE

8" SS

2" GAS LINE

N 0°25'42.4" W

ATTENTION:
LEAKING UNDERGROUND STORAGE TANK (LUST) SITE
OCC CASE NO. 55-08224/064-1702
SEE ENVIRONMENTAL NOTES

ATTENTION:
LEAKING UNDERGROUND STORAGE TANK (LUST) SITE
OCC CASE NO. 55-08554/064-0831
SEE ENVIRONMENTAL NOTES

SEC. 34. T11N. R3W

Design			
Drawn			
Checked			
Approved			
Squad	POE		

REMOVALS
PHASE IA CONSTRUCTION
(SHT. 1 OF 6)

State Job No. 09032(17) Sheet No. 64

SEPT 08, 2016 - 19:55:11
H:\PROJECTS\2789_CrossRoads_InterX_New\PHASE IA\Roadway\Drawings\2789-PHASE1A-REMOVAL I-240 1.DWG

SEC. 27. T11N. R3W

REVISIONS

DESCRIPTION	DATE

REMOVAL LEGEND

- ASPHALT REMOVAL
- CONCRETE REMOVAL

REMOVAL TOTALS THIS SHEET

5,350	S.Y. ASPHALT PAVEMENT
2,364	S.Y. CONCRETE DRIVEWAY
9,528	S.Y. ASPHALT DRIVEWAY
2,772	L.F. CONC. CURB & GUTTER
1,191	L.F. SAWCUT

CLOVERLEAF MANOR

PRES. R/W

EX. N.W. SERVICE RD.

EX. 12" W.L.

6" GAS LINE

8" SS

GAS LINE

10" SS.

12" W.L.

EX. CONC. MED. BARRIER

℄ PRESENT I-240

STATION EQUATION P.O.T. STA.415+08.92 ℄ PRESENT I-240 BK. = P.O.T. STA.415+00.00 ℄ PRESENT I-240 AHD.

EX. OVERHEAD SIGN (LEAVE)

E-W SEC. LINE N 89°27'29.4"E

(REMOVE) 18" RCP

PLUG

8'x4' RCB (LEAVE)

EX. OVERHEAD SIGN

2-6'x4' RCB

260 L.F. SAWCUT

REMOVE 4,633 S.Y. ASPHALT PAVEMENT

6" GAS

STA. 407+32.00 ℄ PRES. I-240 END REMOVALS EASTBOUND LANES

℄ PROP. I-240

REMOVE 2,733 L.F. CONC. CURB & GUTTER

EX. S.W. SERVICE RD.

PRES. R/W

REMOVE 717 S.Y. ASPHALT PAVEMENT

(REMOVE) EX. 24" RCP

PLUG

12" W.L.

REMOVE GUARD RAIL

EXIST. BILL BOARD (REMOVE)

6" GAS LINE

REMOVE GUARD RAIL

REMOVE 5,403 S.Y. ASPHALT PARKING AREA

END GUARD RAIL REMOVAL

REMOVE M.H., INLET & 170 L.F. 18" RCP

18" RCP

REMOVE EX. HEADWALL

R/W

PUE

REMOVE INLET & 130 L.F. 24" RCP

543 L.F. SAWCUT

REMOVE 184 S.Y. CONCRETE DRIVEWAY

90 L.F. SAWCUT

276 L.F. SAWCUT

REMOVE 1,892 S.Y. ASPHALT PARKING AREA

REMOVE 39 L.F. CONC. CURB & GUTTER

REMOVE 2,152 S.Y. CONCRETE DRIVEWAY & PARKING AREA

REMOVE 28 S.Y. CONCRETE DRIVEWAY

22 L.F. SAWCUT

REMOVE 2,233 S.Y. ASPHALT PARKING AREA

405+00

420+00

50' 0 50' 100'

Horizontal Scale in Feet

(1) CONC. CURB & PLANTERS TO BE REMOVED WITHIN THE AREA OF ASPHALT REMOVAL. COST TO BE INCLUDED IN THE PRICE BID FOR OTHER ITEMS OF WORK.

SEC. 34. T11N. R3W

Design		
Drawn		
Checked		
Approved		
Squad	POE	

REMOVALS PHASE IA CONTRUCTION (SHT. 2 OF 6)

State Job No. 09032(17) Sheet No. 65

SEPT 08, 2016 - 19:59:47
H:\PROJECTS\2789__CrossRoads__InterX__New\PHASE IA\Roadway\Drawings\2789-PHASE1A-REMOVAL I-240 2.DWG

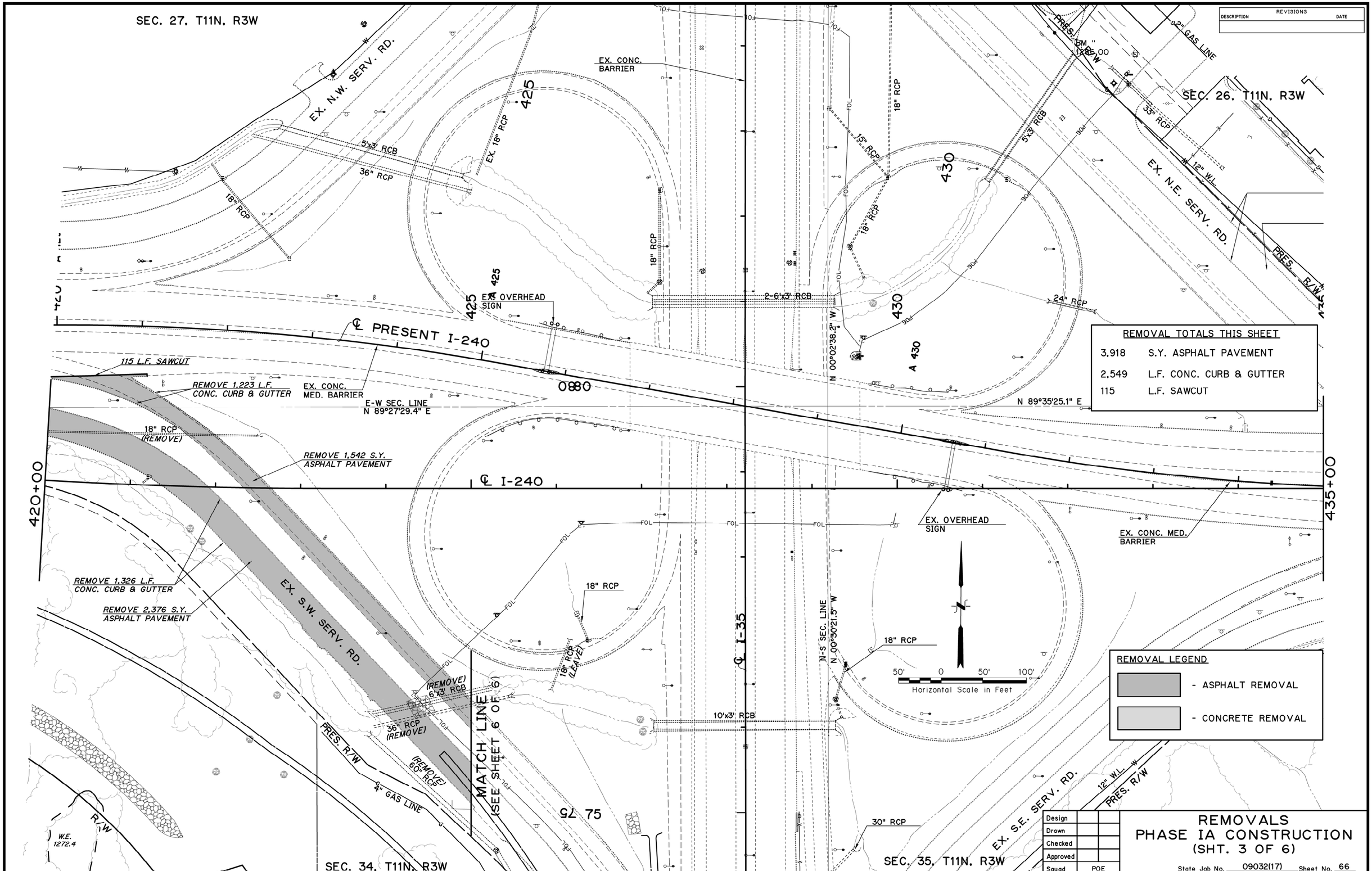

SEPT 08, 2016 - 20:02:23
H:\PROJECTS\2789_CrossRoads_InterX_New\PHASE IA\Roadway\Drawings\2789-PHASE1A-REMOVAL I-240 3.DWG

SEC. 34, T11N, R3W

GATEWAY

S.E. 84th ST.

45

45

INDUSTRIAL

50

50

PARK

PRES. R/W

EX. 12" W.L.

EX. S.W. SERVICE RD.

STA. 54+39.73
BEGIN REMOVALS
(S.W. SERV. RD.)

N 89°26'40.0"E

S.E. 82nd ST.

2"

55

55

REMOVE 815
S.Y. CONCRETE
PAV'T. & CURB

REMOVE 25
S.Y. CONC.
DIV. STRIP

260 L.F.
SAWCUT

PRES. R/W

EX. 18" RCP

26 L.F. SAWCUT

REMOVE
INLET

EX. 18" RCP
(LEAVE)

EX. M.S.E. WALL
& CONC. DITCH
(LEAVE)

ADJUST EXIST
MHS TO GRADE

ADJUST EXIST
MH TO GRADE

EX. 42" RCP
(LEAVE)

STA. 52+47.40 BEGIN
CONC. SHLDR. REMOVALS
(SOUTHBOUND I-35)

EX. RETAINING WALL

18" RCP
(LEAVE)

EX. M.S.E. WALL
& CONC. DITCH
(LEAVE)

EX. MANHOLE
(LEAVE)

24" RCP
(REMOVE)

459 L.F.
SAWCUT

REMOVE 345
S.Y. CONCRETE
PAV'T. & CURB

REMOVE INLET
& MANHOLE

6.0'

REMOVE INLET

REMOVE 74
L.F. 24" RCP

REMOVE 72
L.F. 42" RCP

℄ I-35

N 0°30'05.4"W

57+00

EX. CONC. MED. BRIDGE

P.O.T. STA.53+38.45 ℄ I-35 =
P.O.T. STA.99+03.00 ℄ S.E. 82nd ST.

EX. BRIDGE

EX. 30" RCP
(LEAVE)

REMOVE 98 S.Y.
CONC. DIVIDING STRIP

EX. 24" RCP

EX. 24" RCP

N 0°30'05.4" W
N-S SEC. LINE

EX. RETAINING WALL

N-S SEC. LINE
N 0°30'21.5"E

EX. S.E. SERVICE RD.

PRES. R/W

EX. RETAINING WALL

1306.41' BM
"

4.5" GAS LINE

EX. 18" RCP

PRES. R/W

E-W 1/4 SEC. LINE
N 89°34'29.4"E

2" GAS
LINE

REVISIONS

DESCRIPTION	DATE

REMOVAL LEGEND

- ASPHALT REMOVAL
- CONCRETE REMOVAL

REMOVAL TOTALS THIS SHEET

1160	S.Y. CONCRETE PAVEMENT*
123	S.Y. CONC. DIVIDING STRIP
745	L.F. SAWCUT

50' 0 50' 100'
Horizontal Scale in Feet

* INTEGRAL CONC. CURB INCLUDED IN S.Y. QUANTITY OF P.C. CONC. PAVEMENT

SEC. 35, T11N, R3W

Design		
Drawn		
Checked		
Approved		
Squad	POE	

REMOVALS
PHASE IA CONSTRUCTION
(SHT. 4 OF 6)

State Job No. 09032(17) Sheet No. 67

SEPT 08, 2016 - 20:05:09
H:\PROJECTS\2789_CrossRoads_InterX_New\PHASE IA\Roadway\Drawings\2789-PHASE1A-REMOVAL I-35 1.DWG

REVISIONS	
DESCRIPTION	DATE

SEC. 34, T11N, R3W

REMOVE 61 S.Y. CONC. DIV. STRIP

271 L.F. SAWCUT

LEAVE MANHOLE & INLET

REMOVE INLET & 26 L.F. 18" RCP

REMOVE 57 S.Y. CONC. DRIVE & 33 LF. SAWCUT

REMOVE INLET & 5 L.F. 18" RCP

REMOVE 1,235 S.Y. CONCRETE PAV'T. & CURB

REMOVE INLET, MANHOLE & 5 L.F. 18" RCP

ADJUST MANHOLE TO GRADE

REMOVE 114 L.F. 24" RCP

REMOVE 138 S.Y. CONC. DRIVE & 23 LF. SAWCUT

REMOVE 40 S.Y. CONC. DRIVEWAY, 650 S.Y. ASPH. DRIVEWAY AND PARKING AREA & 297 LF. SAWCUT

23 L.F. SAWCUT

REMOVE 1,899 L.F. CONC. CURB & GUTTER

REMOVE 2 INLETS & 88 L.F. 18" RCP

ADJUST MANHOLE TO GRADE

REMOVE 514 S.Y. CONC. DRIVEWAY, 99 S.Y. ASPH. DRIVEWAY & 48 LF. SAWCUT

REMOVE 196 S.Y. CONC. DRIVEWAY

ADJUST MANHOLE TO GRADE

REMOVE 251 S.Y. ASPH. DRIVEWAY

145 L.F. SAWCUT

REMOVE 311 L.F. EX. FENCE

EX. BILL BOARD (REMOVE)

DES. 1A BARRIER REMOVE 128 L.F.

REMOVE 3 MANHOLES & 365 L.F. 60" RCP

EX. 60" RCP

2" GAS LINE

PRES. R/W

R/W

PUE

S.E. 79th ST.

S.W. SERVICE RD.

EX. 8" SS LINE

BILLBOARD

GARDEN ACRES

54.76'

7.33'

21'

EX. FENCE (REMOVE)

EX. IMPACT ATTENUATORS (REMOVE)

REMOVE 3,628 S.Y. ASPHALT PAV'T.

EX. 60" RCP (LEAVE)

EX. 42" RCP

24" RCP

18" RCP

EX. CONC. SHLDR.

1,512 L.F. SAWCUT

REMOVE INLET, MANHOLE & 26 L.F. 18" RCP

93.37' LT. STA. 57+39.51 ℄ I-35

END EX. M.S.E. WALL (LEAVE)

REMOVE 400 L.F. EX. M.S.E. RET. WALL

REMOVE 570 L.F. 42" RCP

N 0°30'05.4"W

ADJUST MANHOLE TO GRADE

REMOVE 2,917 S.Y. CONCRETE PAV'T. & CURB

℄ I-35

REMOVE 48 L.F. 60" RCP & MANHOLE

REMOVE 3 INLETS & 98 L.F. 18" RCP

REMOVE 21 S.Y. CONC. DIV. STRIP

REMOVE 160 L.F. BARRIER & EX. IMPACT ATTEN.

REMOVE 60 C.Y. CONC. DIVIDING STRIP

REMOVE 50 L.F. BARRIER & EX. IMPACT ATTEN.

REMOVE INLET & 4 L.F. 18" RCP

EX. BARRIER (LEAVE)

EXIST. O.H. SIGN (REMOVE)

REMOVE INLET & 4 L.F. 18" RCP

6" GAS LINE

47' LT. STA. 67+03.48 ℄ I-35 BEG. REMOVAL OF EXIST. ENTR. RAMP

REMOVE INLET & 10 L.F. 18" RCP

REMOVE 505 S.Y. CONC. PAV'T. & CURB

57+00

72+00

59'

47'

12'

EX. 18" RCP

N 0°30'21.5" W

N-S SEC. LINE

EX. 24" RCP

EX. 30" RCP

EX O.H. SIGN STRUCTURE

24" RCP

18" RCP

EX. 18" RCP PIPE

4.5" GAS LINE

BM #290.53

EX OVERHEAD SIGN

S.E. SERVICE RD.

PRES. R/W

50' 0 50' 100'

Horizontal Scale in Feet

REMOVAL LEGEND

- ASPHALT REMOVAL
- CONCRETE REMOVAL

REMOVAL TOTALS THIS SHEET

4,657	S.Y. CONCRETE PAVEMENT*
3,628	S.Y. ASPHALT PAVEMENT
945	S.Y. CONCRETE DRIVEWAY
1,000	S.Y. ASPHALT DRIVEWAY
142	S.Y. CONC. DIVIDING STRIP
338	L.F. CONCRETE BARRIER
400	L.F. CONC. RETAINING WALL
1,899	L.F. CONC. CURB & GUTTER
2,319	L.F. SAWCUT

* INTEGRAL CONC. CURB INCLUDED IN S.Y. QUANTITY OF CONC. PAVMENT

SEC. 35, T11N, R3W

Design		
Drawn		
Checked		
Approved		
Squad	POE	

REMOVALS
PHASE IA CONSTRUCTION
(SHT. 5 OF 6)

State Job No. 09032(17) Sheet No. 68

SEPT 08, 2016 - 20:07:33
H:\PROJECTS\2789_CrossRoads_InterX_New\PHASE IA\Roadway\Drawings\2789-PHASE1A-REMOVAL I-35 2.DWG

SEC. 34. T11N. R3W

SEC. 27. T11N. R3W

SEC. 35. T11N. R3W

SEC. 26. T11N. R3W

REVISIONS

DESCRIPTION	DATE

PUE R/W

PRES. R/W

60" RCP

36" RCP

6x3' RCB

MATCH LINE (SEE SHEET 4 OF 7)

REMOVE 782 L.F. CONC. CURB & GUTTER

REMOVE 2 MANHOLES & 483 L.F. 60" RCP W/CONC. HEADWALL

REMOVE 1393 S.Y. ASPHALT PAVEMENT

4" GASLINE

EX. S.W. SERVICE RD.

PRES R/W

60" RCP

117.2' LT. P.O.T. STA.77+18.60 ℄ I-35

REMOVE 2783 S.Y. ASPHALT PAVEMENT

REMOVE 545 L.F. CONC. CURB & GUTTER

18" RCP

235 L.F. SAWCUT

614 L.F. SAWCUT

REMOVE 600 L.F. EX. DES. 1A BARRIER

REMOVE 1,247 S.Y. P.C.CONC. PAVEMENT

REMOVE INLET & 32 L.F. 18" RCP W/ CONC. HDWL.

72+00

47'

63'

12'

10'

N 0°30'05.4"W

63' LT. STA. 78+63.62 ℄ I-35 END REMOVAL FOR TEMP. CONN. RAMP "C"

STA. 78+00.00 ℄ I-35 END P.C. CONC. SHLDR. AND BARRIER REMOVAL

10'x5' RCB

30" RCP

N 0°30'21.5" W N-S SEC. LINE

18" RCP

18" RCP

4'x3' RCB

BM " 1287.01

PRES R/W

EX. S.E. SERVICE RD.

12" W.L.

PRES R/W

18" RCP

E-W SEC. LINE S 89°27'29.4" W

℄ I-240

80

75

425

36" RCP

5'x3' RCB

EX. N.W. SERVICE RD.

85

18" RCP

EX. OVER HEAD SIGN

BM " 1288.42

18" RCP

18" RCP

FOL

℄ I-35

N 0°20'39.3"W

87+00

2-6'x3' RCB

N-S SEC. LINE N 0°20'38.2" W

18" RCP

15" RCP

18" RCP

430

OVERHEAD SIGN (TYP.)

5x3 RCB

24" RCP

S 89°35'25.1" W

EX. N.E. SERVICE RD.

PRES R/W

BM " 1286.00

12" W.L.

50' 0 50' 100'

Horizontal Scale in Feet

REMOVAL LEGEND

- ASPHALT REMOVAL
- CONCRETE REMOVAL

* INTEGRAL CONC. CURB INCLUDED IN S.Y. QUANTITY OF CONC. PAVEMENT

REMOVAL TOTALS THIS SHEET

1,247	S.Y. CONCRETE PAVEMENT*
464	S.Y. ASPHALT PAVEMENT
600	L.F. CONCRETE BARRIER
1,327	L.F. CONC. CURB & GUTTER
849	L.F. SAWCUT

Design		
Drawn		
Checked		
Approved		
Squad	POE	

REMOVALS PHASE IA CONSTRUCTION (SHT. 6 OF 6)

State Job No. 09032(17) Sheet No. 69

SEPT 08, 2016 - 20:10:21
H:\PROJECTS\2789_CrossRoads_InterX_New\PHASE IA\Roadway\Drawings\2789-PHASE1A-REMOVAL I-35 3.DWG

REVISIONS	
DESCRIPTION	DATE

EXISTING & PROPOSED LIMITS OF ACCESS TO SERVICE ROAD ONLY

SEC. 27, T11N, R3W

50' 0 50' 100'
Horizontal Scale in Feet

SHIELDS BLVD.

PRES. R/W

6" C.S.

18" RCP

71' LT. P.O.T. STA.397+15.00 ℄ I-240
END 50:1 SHOULDER TAPER

P.O.T. STA.400+00.00 ℄ I-240 BK.=
P.C. CV. CV-1 STA.399+96.14 ℄ I-240 AHD.
STATION EQUATION

EXIST. N.W. SERVICE RD.

CAUTION:
PROP 12" W.L.

CAUTION:
SANITARY SEWER

26.5' P.O.C. STA.404+42.00 ℄ I-240
END MILL & OVERLAY-BEG. TEMP. CONN.

Ex. Retaining Wall

EX. SLOPE WALL

59' RT. P.O.C. STA.403+46.03 ℄ I-240=
P.O.T. STA.403+46.03 BEG. ℄ RAMP 'G'

TEMPORARY CONNECTION (SEE TYPICAL)

EX. 4'x4' RCB

P.O.T. STA.391+58.94 ℄ I-240
65' LT. END OUTSIDE SHLD. TAPER

65' LT. P.O.T. STA.394+15.00 ℄ I-240
BEG. 50:1 SHOULDER TAPER

+40 END TEMP. CONN.
W.B. LANES

35' RT. P.O.C. STA.403+00.00 ℄ I-240
BEG. CONSTRUCTION-BEG. MILL & OVERLAY

℄ EXIST. I-240

℄ EXIST. & PROP. I-240

N 89°27'24.6"E

Ex. Port. Long. Barrier (LEAVE)

℄ PROP. I-240

65' RT. P.O.T. STA.392+60.00 ℄ I-240
END 50:1 SHOULDER TAPER

65' RT. P.O.T. STA.394+80.00 ℄ I-240
BEG. 50:1 SHOULDER TAPER

71' RT. P.O.T. STA.397+80.00 ℄ I-240
END 50:1 SHOULDER TAPER

RETAINING WALL 'E2'

59' RT. P.O.C. STA.402+00.00 ℄ I-240-
BEGIN INCIDENTAL CONSTRUCTION

Ex. Retaining Wall

E-W SEC. LINE

N 89°27'41.4"E

N 89°27'29.4"E

℄ RAMP 'G'

℄ S.W. SERVICE RD.

PRES. R/W

R/W

PUE

CONST. 2'-8" CONC. CURB & GUTTER (6" BAR.) SEE SHEET 51

PROP 12" W.L.

72.5' RT. P.O.C. STA.403+46.03 ℄ I-240
END RETAINING WALL 'E2'

CONST. 2'-8" CONC. CURB & GUTTER (6" BAR.) SEE SHEET 51

SEC. 34, T11N, R3W

EXISTING & PROPOSED LIMITS OF ACCESS TO SERVICE ROAD ONLY

390+00 395 400 405+00

BM#11 - "X" ON CURB @ P.I. S. COR.
PARKING LOT OF VALERO GAS STA.
176.68' LT. ℄ I-240
I-240 STA. 394+01.73 EL=1275.41

NOTE:
FOR DRIVEWAY INFORMATION
SEE SCHEDULE OF DRIVEWAYS
SHEET NO. 51

BM#10 - "X" ON CURB @ INLET S.
PARKING LOT OF HOME DEPOT
175.60' LT. ℄ I-240
I-240 STA. 399+94.10 EL=1270.89

BM#20 -"X" ON CURB @ P.I. OF W.
ENTRANCE TO CAR DEALERSHIP.
157.12' RT. ℄ 240
I-240 STA. 402+17.71 EL=1276.76

* EXISTING & PROPOSED LIMITS OF ACCESS TO SERVICE ROAD ONLY

FOR RIGHT OF WAY INFORMATION SEE SHTS. 59-63

℄ SHIELDS BLVD

OH-ELEC

17.0' ± MIN. VERT. CLR.

300.00' V.C.
K=351.75

PROFILE GRADE LINE
(AS SHOWN ON TYPICALS)

+50.00
1258.43

Exist. ℄ Profile

PROFILE FUTURE FINISHED GRADE LINE

P.O.T. STA.397+24.67 ℄ I-240
END E.B. & W.B. CONSTRUCTION
BEG. PARTIAL CONST. E.B. LANES
BEG. TEMP. CONNECTION E.B. & W.B.

281.54' V.C.
K =183.639

+18.46
1260.31

+96.14
1263.59

+00.00
1267.53

1.933%

0.400%

-0.453%

APPROX. LOCATION EX. 18" RCP LT. TO SERV. RD.

EX. 18" RCP LT.

EX. 18" RCP RT.

EX. 18" RCP

EX. 18" RCP RT.

EX. 18" RCP RT.

(REMOVE) EX. 18" RCP RT.

EX. 4'x4' RCB (LEAVE)

℄=1255.87

℄=1255.35

℄=1256.95

℄=1256.00

APPROX. LOCATION EX. 3'x3' BLIND JCT. BOX
LID=1258.9
FL=1256.0

STA. EQUA.

STA.400+00.00 ℄ I-240 BK.
ELEV. = 1263.59
STA.399+96.14 ℄ I-240 AHD.

PVI STA.391+00.00
Elev= 1257.83

LO POINT +09.30
Elev= 1258.15

PVI STA.398+59.23
Elev =1260.87

PVI STA.A 405+00.00
Elev =1273.33

TG=1266.63
FL=1262.13 (1)

TG=1272.55
FL=1269.70 (2)

TG=1272.17
FL=1268.61 (3)

TG=1269.07
FL=1266.40 (G27)

EX. 24" RCP

18" RCP @ 4.50%

18" RCP @ 1.99%

18" RCP @ 0.56

℄=1267.27
EX. 24" RCP

GAS

8" S.S.

PROP. 12" SAN. SEWER LINE B
600.00' V.C.
K =419.079

PROP. 12" WATER LINE C

FL=1260.91
REMOVE PLUG

I-240

1258.32 1258.15 1258.37 1258.63 1259.03 1259.43 1259.83 1260.23 1260.33 1260.81 1261.93 1263.66 1265.60 1267.53 1269.34 1270.92 1272.26

1285 1280 1275 1270 1265 1260 1255 1250 1245 1240

390+00 391 392 393 394 395+00 396 397 398 399 400+00 401 402 403 404 405+00

State Job No. 09032(17) Sheet No. 70

PLAN: SURVEYED, PLOTTED, ALIGNMENT CHECKED, RT. OF WAY CHECKED, NOTE BOOK, NO., BY, DATE

PROFILE: SURVEYED, PLOTTED, ALIGNMENT CHECKED, RT. OF WAY CHECKED, NOTE BOOK, NO., BY, DATE

SEPT 09, 2016 - 10:56:23
H:\PROJECTS\2789_CrossRoads_InterX_New\PHASE IA\Roadway\Drawings\2789-PHASE1A-PNP I-240 1.DWG

REVISIONS	
DESCRIPTION	DATE

PLAN — SURVEYED — PLOTTED — NOTE BOOK — NO. — BY — DATE — ALIGNMENT CHECKED — RT. OF WAY CHECKED

PROFILE — SURVEYED — PLOTTED — NOTE BOOK — NO. — BY — DATE — ALIGNMENT CHECKED — RT. OF WAY CHECKED

PRES. R/W

EXIST. N.W. SERVICE RD.

12" W.L.

SEC. 27. T11N. R3W

NOTE:
FOR DRIVEWAY INFORMATION
SEE SCHEDULE OF DRIVEWAYS
SHEET NO. 51

FOR RIGHT OF WAY INFORMATION SEE SHTS. 59-63

P.T. CV. CV-1
STA.406+46.03 ℄ I-240

P.O.C. STA.407+32.00 ℄ FUTURE I-240
END TEMP. CONN. E.B. LANES

℄ EXIST. I-240

50' 0 50' 100'
Horizontal Scale in Feet

P.O.C. STA.420+00.00 ℄ FUTURE I-240
END PARTIAL CONST. E.B. LANES

P.C. CV. CV-2
STA.416+97.59 ℄ I-240

E-W SEC. LINE
N 89°27'29.4"E

CAUTION:
SANITARY SEWER

405+00

420+00

CV. CV-1

℄ PROPOSED I-240

S 84°02'39.4" E

CV. CV-2

PRES. R/W

CD2

73' RT. P.O.C. STA.418+80.39 ℄ I-240=
24' LT. P.O.T. STA.418+78.72 ℄ RAMP 'G'

GORE PT.

℄ RAMP 'G'

G30 G29 G26 G34 G33 G32 G10 G31 SW44 SW43 SW39 G28

18" RCP

51"x31" RCPA

24" RCP

℄ S.W. SERVICE RD.

CD1

R/W PUE

71' RT. P.I. STA.406+46.03 ℄ I-240=
P.I. STA.406+42.84 ℄ RAMP 'G'

CAUTION:
12" W.L.

CONST. 2'-8" CONC. CURB & GUTTER (6" BAR.) SEE SHEET 51

P.C. CV. G-1
STA.413+05.28 ℄ RAMP 'G'

SEC. 34. T11N. R3W

P.T. CV. G-1
STA.416+23.68 ℄ RAMP 'G'

P.C. CV. G-2
STA.418+78.95 ℄ RAMP 'G'

EXISTING & PROPOSED LIMITS OF ACCESS TO SERVICE ROAD ONLY

BM#21 -"X" ON HEADWALL DRAINAGE STRUCTURE 271.68' RT. ℄ 240 I-240 STA. 408+36.59 EL=1275.43

BM#22 -"X" ON CURB OF SIDEWALK ON N. SIDE BUILDING. 319.36' RT. ℄ I-240
I-240 STA. 413+98.14 EL=1281.85

BM#7 - "□" ON TOP E. SIDE OF CONCRETE DRAINAGE DITCH 406.13' LT. ℄ I-240
I-240 STA. 418+82.24 EL=1265.29

\# EXISTING & PROPOSED LIMITS OF ACCESS TO SERVICE ROAD ONLY

G29 TC=1271.56 FL=1264.91

G34 TC=1274.07 FL=1265.67 & STUB IN FR STR G33

G26 TG=1273.25 FL=1268.58

TG=1274.06 FL=1265.78 G33

TG=1274.20 FL=1266.27 G32

TG=1273.00 FL=1270.44 G10

TC=1272.69 G30

PVI STA.A 405+00.00
Elev =1273.33

+18.83 ℄ PROP. I-240
EX. 2-8'x4' RCB X-ing

EXTEND EXIST. 2-8'x4' RCB 76' RT.

CD1

+00.00 1275.90

Exist. ℄ Profile

PROFILE FUTURE FINISHED GRADE LINE

0.501%

0.500%

-1.000%

+00.00 1278.85

600.00' V.C.
K =210.632

3.350%

+00.00 1277.00

+00.00 1276.00

GAS

WATER

SPECIAL DITCH LT.
(SEE CROSS SECTIONS)

PVI STA.A 419+00.00
Elev =1280.35

EX. 8'x4' RCB (LEAVE)

PROP. 10'x5' RCB RT.

CD2 INLET ℄ =1266.37

CD2 OUTLET ℄ =1265.19

10" S.S. ℄ IN 1265.00

24" RCP @ 1.36%

51" X 31" RCPA @ 0.50%

36"x22" RCPA @ 0.50%

℄ =1264.36

43" X 26" RCPA @ 0.52%

FL=1266.94 STUB INTO G32 FR G10

FL=1266.44 STUB INTO G32 FR G31

FL=1266.09 STUB INTO G32 FR SW44

43" X 26" RCPA @ 0.52%

FL=1265.41 STUB INTO G29 FR G27

FL=1264.57 & STUB IN FR G29

36" X 22" RCPA @1.82%

FL=1265.05 STUB INTO CD1 FR G34

PROP. 24" SAN. SEWER LINE A

FL=1264.47 STUB INTO EX. 2-8'x4' RCB FR G30

+00.00 1274.83

600.00' V.C.
K =419.079

FL=1266.09 STUB INTO G33 FR G32

I-240

1290 1285 1280 1275 1270 1265 1260 1255 1250 1245

1272.26 1273.35 1274.21 1274.83 1275.34 1275.84 1276.34 1276.84 1277.34 1277.84 1276.34 1278.85 1279.58 1280.80 1282.49 1284.65

405+00 406 407 408 409 410+00 411 412 413 414 415+00 416 417 418 419 420+00

State Job No. 09032(17) Sheet No. 71

SEPT 09, 2016 - 10:57:16
H:\PROJECTS\2789__CrossRoads__InterX__New\PHASE IA\Roadway\Drawings\2789-PHASE1A-PNP I-240 2.DWG

REVISIONS	
DESCRIPTION	DATE

SEC. 27, T11N, R3W

N-S 1/4 SEC. LINE
N 0°21'42.2" W

59' RT. P.O.C. STA.403+46.03 ℄ I-240=
P.O.T. STA.403+46.03 BEG. ℄ RAMP 'G'
END RETAINING WALL 'E2' 13.5' RT.
BEG. SHLD. TAPER (12' TO 10')

71' RT. P.O.C. STA.406+46.03 ℄ I-240=
P.I. STA.406+42.84 ℄ RAMP 'G'

E.B. TEMP. CONNECTION

CAUTION: SANITARY SEWER

Horizontal Scale in Feet
50 0 50' 100'

P.T. CV. G-1
STA.416+23.68 ℄ RAMP 'G'

E-W SEC. LINE
N 89°27'29.4"E

℄ PROP. I-240

PRES. R/W

℄ RAMP 'G'

℄ S.W. SERVICE RD.

CV. G-1

S 84°02'39.4"E

S 80°51'37.4"E

S 83°13'40.6"E

18" RCP

36" RCP

51"x31" RCPA

24" RCP

EX. 2-8'x4' RCB

EX. 24" RCP

R/W

PUE

CONST. 2'-8" CONC. CURB & GUTTER (6" BAR.) SEE SHEET 51

71' RT. P.O.C. STA.403+77.33 ℄ I-240=
10' RT. P.O.T. STA.403+77.68. ℄ RAMP 'G'
END SHOULDER TAPER

77.62' RT. P.O.C. STA.403+55.00 ℄ I-240
O.H. SIGN STR. 1 (60" DRILLED SHAFT)

N 0°25'42.4" W

P.C. CV. G-1
STA.413+05.28 ℄ RAMP 'G'

NOTE:
FOR DRIVEWAY INFORMATION
SEE SCHEDULE OF DRIVEWAYS
SHEET NO. 51

FOR RIGHT OF WAY INFORMATION
SEE SHTS. 59-63

SEC. 34, T11N, R3W

EXISTING & PROPOSED LIMITS OF ACCESS TO SERVICE ROAD ONLY

BM#21 -"X" ON HEADWALL DRAINAGE STRUCTURE
271.68' RT. STA.408+36.59 ℄ I-240 EL=1275.43

BM#23 -"X" ON BASE OF LIGHT POLE
E. SIDE OF PARKING LOT.
439.75' RT. ℄ I-240
I-240 STA. 416+99.26 EL=1282.385

PVI STA.403+46.03
Elev= 1268.74

OH-ELEC

EX. AREA INLET
TG=1270.80
℄=1266.74
(REMOVE)

+45 EX. 24" RCP X-ING

+50.27 ℄ RAMP 'G' EX. 2-8'x4' RCB X-ing

G27 TG=1269.07 FL=1266.40

G23 TC=1271.56 FL=1264.91
EX. M.H.
TC=1271.77
℄=1267.27
(REMOVE)

G30 TC=1272.69

G26 TG=1273.25 FL=1268.58

G34 TC=1274.07 FL=1265.67 & STUB IN FR STR G33

G33 TG=1274.06 FL=1265.78

G32 TG=1274.20 FL=1266.27

G10 TG=1273.00 FL=1270.44

G31 TC=1275.20 FL=1269.56

G25 TG=1274.61 FL=1270.16

G24 TG=1276.27 FL=1271.74

VARIABLE GRADE (SEE RAMP TERMINAL DETAILS)

PROFILE EX. GROUND

PROFILE FIN. GRADE AS SHOWN ON CROSS-SECTIONS

(REMOVE) EX. 24" RCP

(REMOVE) EX. 24" RCP

18" RCP @ 0.58%

36"x22" RCPA @ 0.50%

CD1

FL=1268.48 STUB INTO G34 FR G26

51" X 31" RCPA @ 0.50%

EX. 18" RCP

24" RCP @ 1.36%

18" RCP @ 0.50%

WATER

FL=1266.94 STUB INTO G32 FR G10

FL=1266.44 STUB INTO G32 FR G31

FL=1266.09 STUB INTO G32 FR SW33

FL=1270.06 STUB INTO STR G31 FR G24 & G25

EX. 2-8'x4' RCB

℄ OUT 1263.03

℄=1264.36 EXTEND EXIST. 2-6'x4' RCB 75.1' RT.

FL=1264.57 & STUB IN FR. G29 36" X 22" RCPA @ 1.82%

FL=1265.05 STUB INTO CD1 FR G34

PROP. 24" SAN. SEWER LINE A

43" X 26" RCPA @ 0.52%

FL=1268.73+/- STUB EX. 18" RCP INTO STR. G33

FL=1265.41 STUB INTO G29 FR G27

FL=1264.47 STUB INTO EX. 2-8'x4' RCB FR G30

51" X 31" RCPA @ 0.53%

FL=1266.09 STUB INTO G33 FR G32

RAMP 'G'

1269.47	1270.10	1270.68	1271.22	1271.74	1272.63	1273.04	1273.37	1273.65	1273.90	1274.15	1274.40	1274.65	1274.90	1275.15	1275.41	1275.66	1275.91	1276.16	1276.41	1276.64	1277.10	1277.68	1278.26	1278.82	1279.45	1280.17	1280.89	1281.36
403	404	405+00	406	407	408	409	410+00	411	412	413	414	415+00	416	417	418													

PLAN	PROFILE
SURVEYED	
PLOTTED	
ALIGNMENT CHECKED	
RT. OF WAY CHECKED	
NOTE BOOK	
NO.	
BY	
DATE	

State Job No. 09032(17) Sheet No. 72

SEPT 09, 2016 - 10:58:43
H:\PROJECTS\2789__CrossRoads__InterX__New\PHASE IA\Roadway\Drawings\2789-PHASE1A-PNP RAMPG 1.DWG

REVISIONS		
	DESCRIPTION	DATE
1	ADDED DRIVE	09/23/16

PLAN — SURVEYED / PLOTTED / ALIGNMENT CHECKED / RT. OF WAY CHECKED — NOTE BOOK — NO. — BY — DATE

E-W SEC. LINE
N 89°27'29.4"E

℄ PROP. I-240

PRES. R/W

CV. G-2, ℄ RAMP 'G'

CV. G-3 4" P.E.

CD2 — 10'x5' RCB X-ing

CD3 — 10'x4' RCB X-ing

G28

P.C.C. CV. G-2 & G-3
STA.422+83.89 ℄ RAMP "G"

P.O.C. STA.424+15.75 ℄ RAMP "G"
P.O.T. STA.422+57.84 ℄ RAMP "M"

RETAINING WALL 'N'

℄ RAMP 'M'

℄ S.W. SERVICE RD.

℄ I-35

N-S SEC. LINE
S 00°30'21.5" E

60" RCP

78" RCP

RETAINING WALL "A"

G23 G22 G15 G18 G36 G35 G21 G14A G20

S 80°51'37.38"E

418+00 420 425 430 433+00

R/W

P.C. CV. G-2
STA.418+78.95 ℄ RAMP "G"

GORE PT.

24' LT. P.O.T. STA.418+78.73 ℄ RAMP 'G'
73' RT. P.O.C. STA.418+80.39 ℄ I-240

W.E. 122.A

EXIST. & PROP. LIMITS OF ACCESS TO SERVICE ROAD ONLY

* TRANS. CURB FROM 0" IN HEIGHT TO 4" MOUNTABLE IN 10'-0"

32.28' RT. P.O.C. STA.430+50.00 ℄ RAMP 'G'
BEGIN RETAINING WALL "A"

24' LT. P.O.C. STA.432+55.21 ℄ RAMP 'G'
57' LT. P.O.T. STA.68+56.12 ℄ I-35

GORE PT.

50' 0 50' 100'
Horizontal Scale in Feet

SEC. 34, T11N, R3W

BM#25 - #6 X 30" LG. REBAR
526.25' LT. ℄ I-35
I-35 STA. 72+81.56 EL=1284.71

BM#26 -"X" IN DRIVEWAY EAST OF FRONT DOOR BODYWORKS INC.
177.72' LT. ℄ I-35
I-35 STA. 68+21.51 EL=1289.24

FOR RIGHT OF WAY INFORMATION SEE SHTS. 59-63

PROFILE — SURVEYED / PLOTTED / ALIGNMENT CHECKED / RT. OF WAY CHECKED — NOTE BOOK — NO. — BY — DATE

VARIABLE GRADE (SEE RAMP TERMINAL DETAILS)

PVI STA.422+00.00
Elev= 1285.31

HI POINT +17.16
Elev= 1284.57

+53.17
1282.54
+73.40 ℄ RAMP 'G'
CD2 - 10'x5' RCB X-ing

1.121%

+50.00
1283.63

G28 TG=1274.50
FL=1268.93

300.00' V.C.
K=149.16

-1.000%

+00.00
1278.00

+50.00
1283.97

+50.00 ℄ RAMP 'G'
CD3 - 10'x4' RCB X-ing

PROFILE FIN. GRADE SHOWN ON CROSS-SECTIONS

PROFILE EX. GROUND

-0.891%

+00.00
1277.00

SPECIAL DITCH LT.

0.700%

GAS

+73.03
1279.32

LO POINT +87.22
Elev= 1278.81

G23 TG=1278.21
FL=1273.68

FL=1283.59
STUB INTO
G36 FR G35

1.449%

300.00' V.C.
K=128.21

TC=1288.04 G36
FL=1273.62
TG=1286.25 G35
FL=1283.69
TC=1279.05 G22
TG=1277.12 G18
FL=1273.33
& STUB IN FR G23
& G36

+73.03
1280.15

EX. 18" RCP

+00.00
1279.00

END SPEC. DITCH LT.
60" RCP @ 0.26%

TG=1278.76 G15
FL=1274.65
TC=1279.76 G21

TC=1281.92 G20
TG=1281.22 G14
FL=1275.27

EX. 60" RCP
(REMOVE)
60" RCP @ 0.25

FL=1274.55
STUB INTO
G21 FR G15

FL=1271.37
& STUB IN FR.
EX. 60" RCP G20

FL=1271.08
& STUB INTO
G21 FR G20 G21

FL=1270.78
& STUB INTO
G22 FR G21 G22

PVI STA.430+23.03
Elev= 1277.98

FL=1273.04
STUB INTO
G22 FR G18

+00.00
1274.50

GAS

0.714%

+00.00
1274.80

CD3

36" RCP
@ 1.75%

FL=1268.47
STUB IN
FR. STR. G28

E=1268.69

EX. 60" RCP

SPECIAL DITCH LT.

EX. 60" RCP

FL=1269.73
OUTLET 60" RCP
FR. STR. G22
184.41' LT.

60" RCP @ 0.25%

EX. 60" RCP

18" RCP @ 0.47%

SPECIAL DITCH RT.

CD2

E=1265.19

EX. 10"
SAN. SEWER

BM#23 -"X" ON BASE OF LIGHT POLE
E. SIDE OF PARKING LOT.
439.75' RT. ℄ I-240
I-240 STA. 416+99.26 EL=1282.385

RAMP "G"

1295 1290 1285 1280 1275 1270 1265 1260 1255 1250

1281.36 1281.66 1282.00 1283.07 1284.11 1284.56 1284.34 1283.53 1282.64 1281.75 1280.86 1279.97 1279.10 1278.81 1279.30 1280.68 1282.30

418 419 420+00 421 422 423 424 425+00 426 427 428 429 430+00 431 432 433

State Job No. 09032(17) Sheet No. 73

SEPT 23, 2016 - 15:38:39
H:\PROJECTS\2789__CrossRoads__InterX__New\PHASE IA\Roadway\Drawings\2789-PHASE1A-PNP RAMPG 2.DWG

REVISIONS	
DESCRIPTION	DATE

FOR RIGHT OF WAY INFORMATION SEE SHTS. 59-63

50 0 50' 100'
Horizontal Scale in Feet

N-S SEC. LINE
S 00°30'21.5" E

P.T. STA.434+05.15 ℄ RAMP 'G'=
71' LT. P.O.T. STA.67+03.48 ℄ I-35

EXISTING ODOT FIBER OPTIC VAULT TO BE RELOCATED BY OTHERS

EXIST. O.H. SIGN STR. (REMOVE)

10.5' RT. P.O.T. STA.438+00.00 ℄ RAMP 'G'
O.H. SIGN STR. 2 (60" DRILLED SHAFT)

℄ I-35

P.I. STA.447+61.27 END ℄ RAMP "G"=
59' LT. P.O.T. STA.53+47.60 ℄ I-35
(END 300' TAPER)

P.I. STA.444+61.03 ℄ RAMP "G"=
71' LT. P.O.T. STA.56+47.60 ℄ I-35
(BEGIN 300' TAPER)

S 02°47'31.6"E

CONST. DES. 1 LONG. BARRIER

(LEAVE) EX. 60" RCP

50:1 TAPER

℄ RAMP 'G'

42" RCP

RETAINING WALL "A"

S 00°30'05.37"E

42" RCP

28"x18" RCPA

EX. RETAINING WALL (LEAVE)

RETAINING WALL 'A'

S.W. SERVICE RD.

PRES. R/W

R/W

PUE

CONST. 2'-8" CONC. CURB & GUTTER (6" BAR.) SEE SHEET 51

CONST. 2'-8" CONC. CURB & GUTTER (6" BAR.) SEE SHEET 51

24' RT. P.O.T. STA.443+69.00 ℄ RAMP 'G'
END RETAINING WALL "A"
MEET & MATCH EX. RETAINING WALL

S.E. 79TH ST.

S.E. 82ND ST.

E-W 1/4 SEC. LINE
N 89°26'40.0" E

WATER VAULT

EXISTING & PROPOSED LIMITS OF ACCESS TO SERVICE ROAD ONLY

SEC. 34, T11N, R3W

OH-ELEC

BM#27 -"X" ON EAST CURB OF PARKING LOT. 136.00' LT. ℄ I-35
I-35 STA. 65+16.94 EL=1290.73

* EXISTING & PROPOSED LIMITS OF ACCESS TO SERVICE ROAD ONLY

BM#28 -"X" ON EAST CURB OF PARKING LOT. 154.01' LT. ℄ I-35
I-35 STA. 59+00.05 EL=1298.27

BM#29 -"X" ON CURB P.I. @ S.E COR. OF S. PARKING LOT OF DAYS INN
HOTEL 230.16' LT. ℄ I-35
I-35 STA. 53+66.62 EL=1309.11

PVI STA.447+61.27
Elev= 1287.20

VARIABLE GRADE (SEE RAMP TERMINAL DETAILS)

PROFILE FIN. GRADE AS SHOWN ON CROSS-SECTIONS

PROFILE EX. GROUND

TC=1281.92 G20
TG=1281.22 G14
FL=1275.27

TG=1283.70 G13
FL=1278.58

TG=1285.49 G12
FL=1280.44

TG=1287.31 G11
FL=1279.15
& STUB IN FR STR. SW7

TC=1296.58 G38

TG=1295.67 G37
FL=1293.11

TC=1288.30 G19

FL=1292.87
STUB INTO G38 FR G37

TC=1286.96 G17

TG=1286.49 G8
FL=1281.51

TG=1285.30 G7
FL=1280.74

TG=1284.83 G6
FL=1280.39
ON EXIST. 18" RCP

TC=1285.90 G5

TG=1285.38 G2

28"x18" RCPA @ 1.00%

(REMOVE) EX. 18" RCP

28"x18" RCPA @ 1.00%

TG=1287.77 G9
FL=1280.55
& STUB IN FR. G38

FL=1280.45
STUB INTO G19 FR. G9

FL=1281.41
STUB INTO G17 FR. G8

FL=1280.64
STUB INTO EXIST. M.H.

FL=1278.48
STUB INTO EXIST. M.H. FR. STR. G13

FL=1280.34
STUB INTO EXIST. M.H. FR. STR. G12

FL=1278.06
STUB INTO EXIST. M.H. FR. STR. G11

EX. 60" RCP (LEAVE)

EX. 60" RCP (LEAVE)

EX. 60" RCP (LEAVE)

EX. 42" RCP (REMOVE)

42" RCP @ 0.51%

EX. 42" RCP (REMOVE)

42" RCP @ 0.55%

42" RCP @ 0.50%

EX. 42" RCP (LEAVE)

EX. 42" RCP (REMOVE)

EX. 24" RCP (REMOVE)

FL=1281.32 G2

FL=1281.22 G5
& STUB IN FR. G3 & G2

FL=1275.17
STUB INTO G20 FR G14

FL=1271.37 G20
& STUB IN FR. EX. 60" RCP

FL=1273.87
STUB INTO EXIST. M.H. FR. STR. G19

G19 FL=1275.70
& STUB IN FR. STR. G17

G17 FL=1276.50
& STUB IN FR. STR. G16

G16 FL=1277.14

FL=1280.62
STUB INTO EXIST. M.H. FR. STR. G5

FOR CONTINUATION SEE I-35

RAMP "G"

1282.30 1282.90 1283.68 1284.53 1285.03 1285.48 1285.93 1286.38 1286.83 1287.25 1287.69 1288.09 1288.51 1288.74 1288.98 1288.95 1288.92 1288.67 1288.42 1288.00 1287.58 1287.08 1286.59 1286.20 1285.82 1285.66 1285.83 1286.07 1286.40

433 434 435+00 436 437 438 439 440+00 441 442 443 444 445+00 446 447

State Job No. 09032(17) Sheet No. 74

PLAN: SURVEYED, PLOTTED, ALIGNMENT CHECKED, RT. OF WAY CHECKED, NOTE BOOK, NO., BY, DATE

PROFILE: SURVEYED, PLOTTED, ALIGNMENT CHECKED, RT. OF WAY CHECKED, NOTE BOOK, NO., BY, DATE

SEPT 09, 2016 - 11:00:11
H:\PROJECTS\2789_CrossRoads_InterX_New\PHASE IA\Roadway\Drawings\2789-PHASE1A-PNP RAMPG 3.DWG

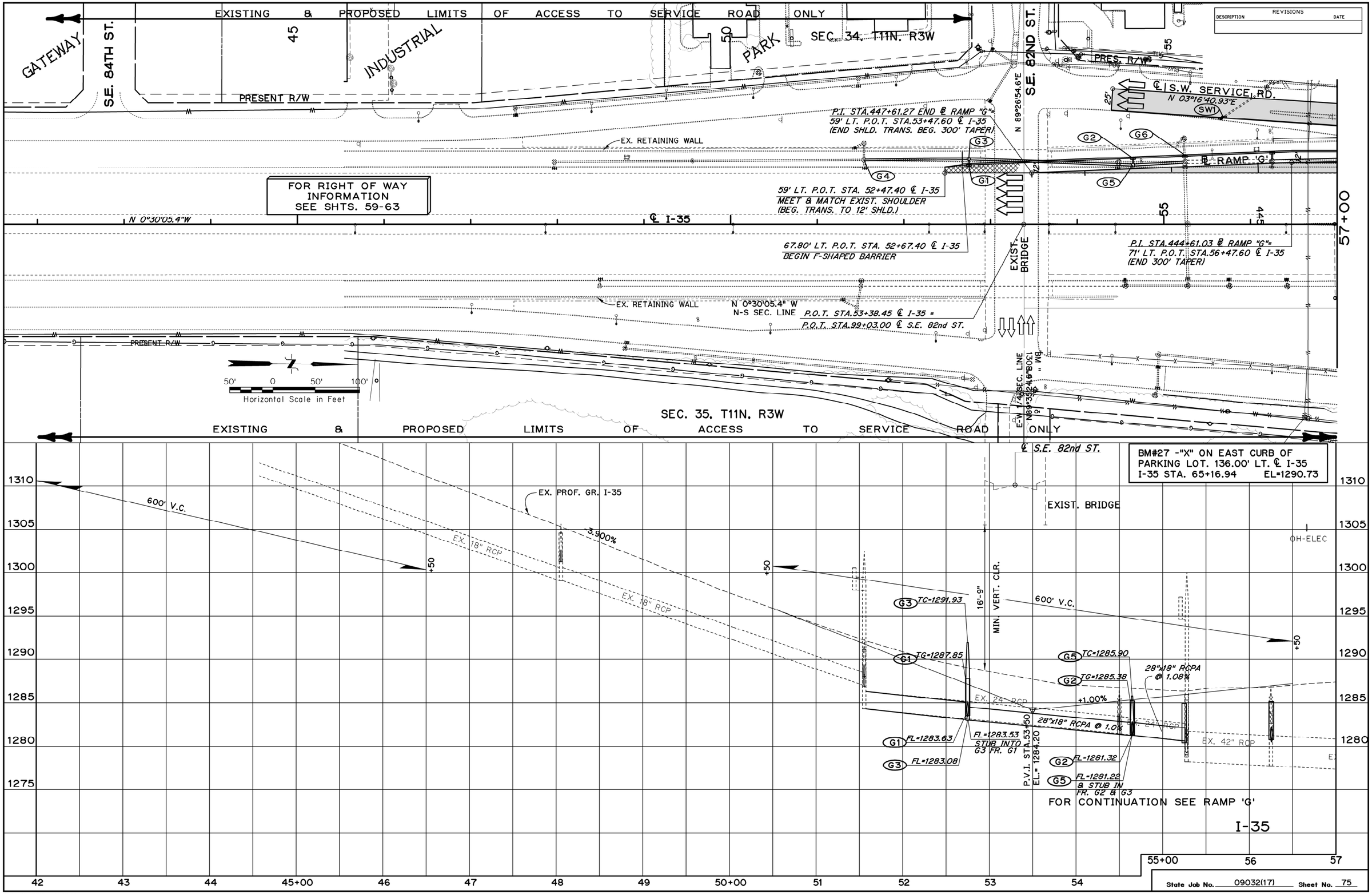

State Job No. 09032(17) Sheet No. 75

PLAN: NOTE BOOK NO. — SURVEYED — PLOTTED — ALIGNMENT CHECKED — RT. OF WAY CHECKED — BY — DATE

PROFILE: NOTE BOOK NO. — SURVEYED — PLOTTED — ALIGNMENT CHECKED — RT. OF WAY CHECKED — BY — DATE

SEPT 09, 2016 - 11:00:52
H:\PROJECTS\2789_CrossRoads_InterX_New\PHASE IA\Roadway\Drawings\2789-PHASE1A-PNP I-35 1-REV.DWG

REVISIONS		
	DESCRIPTION	DATE
1	ADDED DRIVE	09/23/16

SEC. 26, T11N, R3W

SEC. 35, T11N, R3W

FOR RIGHT OF WAY INFORMATION SEE SHTS. 59-63

PRESENT R/W

N 89°35'25.1" E

N 0°20'38.2" W

N-S SEC. LINE
N 0°30'21.5" W

EX. 10'x3' RCB (LEAVE)

P.O.T. STA.1+00.00 ℄ TEMP. CONN.
P.O.T. STA.78+00.00 CL I-35
BEG. OUTSIDE SHOULDER RECONST.
CONST. 100 L.F. DES. 1A LONG. BARRIER
(MEET & MATCH EXIST. BARRIER)

SHIFT ℄ P.T. CV-1 STA.2+36.38 ℄ TEMP. CONN. RAMP 'C' BK.=
12' RT. 55' LT. P.O.T. STA.76+63.96 ℄ I-35=
12' LT. P.C. CV.-2 STA.2+36.38 ℄ TEMP. CONN. RAMP 'C' AHD.

P.O.T. STA.94+13.47 END ℄ RAMP 'C'=
47' LT. P.O.T. STA.70+17.02 ℄ I-35
END LANE TAPER, BEG. I-35 OUTSIDE
SHOULDER CONSTRUCTION

47' LT. P.O.T. STA.68+56.12 ℄ I-35
END OUTSIDE SHOULDER CONST.

℄ I-35

EXIST. INLETS

P.C. CV-1 STA.1+12.69 ℄ TEMP. CONN. RAMP 'C'=
63' LT. P.O.T. STA.77+87.31 ℄ I-35

℄ RAMP 'C'

P.I. STA.91+13.23 ℄ RAMP 'C'=
59' LT. P.O.T. STA.73+17.02 ℄ I-35
BEGIN 25:1 LANE TAPER

S 0°30'05.4"E

S 02°47'31.6"E

EXIST DES. 1A BARRIER

EXIST. DES. 1A BARRIER

℄ PRESENT I-240

E-W SEC. LINE
N 89°27'29.4" E

60" RCP

PRES. R/W

P.O.T. STA.0+00.00 BEG. ℄ TEMP. CONN. RAMP 'C'=
63' LT. P.O.T. STA.79+00.00 ℄ I-35
BEGIN CONSTRUCTION

P.T. CV-2 STA.3+58.52 END ℄ TEMP. CONN. RAMP 'C'=
P.O.T. STA.88+89.63 BEG. ℄ RAMP 'C'=
59' LT. P.O.T. STA.75+40.62 ℄ I-35

12' RT. P.T. CV-1 STA.2+36.38 ℄ TEMP. CONN. RAMP 'C' BK.=
P.C. CV.-2 STA.2+36.38 ℄ TEMP. CONN. RAMP 'C' AHD.
66.9' LT. P.O.T. STA.76+62.41 ℄ I-35

℄ RAMP 'G'

℄ RAMP 'M'

℄ S.W. SERV. RD.

PRES. R/W

CONST. 2'-8" CONC. CURB & GUTTER (6" BAR.) SEE SHEET 51

SEC. 34, T11N, R3W

SEC. 27
T11N, R3W

℄ FUTURE, I-240

50' 0 50' 100'
Horizontal Scale in Feet

BM#26 - #6 X 30" LG. REBAR
526.25' LT. ℄ I-35
I-35 STA. 72+81.56 EL=1283.54

BM#27 -"X" IN DRIVEWAY EAST OF
FRONT DOOR BODYWORKS INC.
177.72' LT. ℄ I-35
I-35 STA. 68+21.51 EL=1289.27

PLAN — SURVEYED, PLOTTED, ALIGNMENT CHECKED, RT. OF WAY CHECKED, NOTE BOOK, NO., BY, DATE

PROFILE — SURVEYED, PLOTTED, ALIGNMENT CHECKED, RT. OF WAY CHECKED, NOTE BOOK, NO., BY, DATE

TEMPORARY CONNECTION

RAMP 'C'

STA.2+36.38 ℄ TEMP. CONN. RAMP 'C'
SHIFT ℄ 14' RT.

STA.3+58.52 END ℄ TEMP. CONN. RAMP 'C'=
STA.88+89.63 BEG. ℄ RAMP 'C'
Elev =1278.86

STA.94+13.47 END ℄ RAMP 'C'=
STA.70+17.02 ℄ I-35
Elev =1282.10

STA.68+56.12 ℄ I-35
END OUTSIDE SHOULDER
CONSTRUCTION

STA.0+00.00 ℄ TEMP. CONN. RAMP 'C'
Elev= 1279.47

100' V.C.
K=30.38

HI POINT +57.34
Elev= 1279.75

PVI STA.0+86.38
Elev= 1279.99

LO POINT +05.35
Elev= 1278.07

+36.38
1278.85

+36.38
1278.23 BK.

+36.38
1279.69

0.602%

-2.270%

0.838%

VARIABLE GRADE
(SEE CONSTRUCTION DETAILS)

(SEE RAMP 'G' TERMINAL DETAILS)

PROFILE FIN. GRADE AS SHOWN ON CROSS-SECTIONS

PROFILE EX. GROUND

100' V.C.
K=34.82

+75.00
1275.97

-2.93%

+36.38
1277.99 AHD

+90.79
1272.85

+58.52
1278.86

PVI STA.1+86.38
Elev= 1277.72

SPEC. V-DITCH RT.

VARIABLE GRADE

+55.56
1269.73

2.024%

+13.47
1279.00

SPEC. DITCH RT.

RAMP "C"

	1279.74	1279.49	1278.58	1278.08	1278.10	1278.49	1278.82	1278.89	1279.23	1279.53	1279.81	1280.07	1280.35	1280.65	1280.96	1281.29	1281.62	1281.99
	-0+50	0+00	1	2	3	89	90+00	91	92	93	94							

State Job No. 09032(17) Sheet No. 76

SEPT 23, 2016 - 15:34:07
H:\PROJECTS\2789_CrossRoads_InterX_New\PHASE IA\Roadway\Drawings\2789-PHASE1A-PNP RAMPC-TEMPCONN.DWG

REVISIONS		
	DESCRIPTION	DATE
1	ADDED DRIVE	09/23/16

℄ I-35

℄ RAMP 'C'

26.72' LT. P.O.T. STA.428+77.56 ℄ RAMP 'M'
END RETAINING WALL 'A'

P.O.C. STA.430+00.00 ℄ RAMP 'M'
BEGIN PAVING

EXISTING ODOT FIBER OPTIC VAULT
TO BE RELOCATED BY OTHERS

(LEAVE)
EX. 60" RCP

P.O.C. STA.425+67.34 ℄ RAMP 'M'
END BRIDGE "M" (FUTURE) BEG. GRADING

60" RCP

RETAINING WALL 'A'

M1

CV. M-3

S 00°30'05.40"E

SW11 SW8 SW9

PRES. R/W

R/W

PUE

SW10 SW7

CONST. 6" CONC. DIVIDING STRIP

CONST. 2'-8" CONC. CURB & GUTTER (6" BAR.) SEE SHEET 51

SW15

P.O.C. STA.431+88.84 ℄ RAMP 'M'
BEG. TAPER 15' RT. (15' TO 14')

P.T. CV. M-3
STA.432+39.88 ℄ RAMP 'M'
END TAPER 14' RT.

℄ RAMP 'G'

℄ RAMP 'M'

S 30°19'59.04"E

5:1

NOSE RAD. PT. 1.6' R

15.6' RT. P.O.T. STA.432+79.57 ℄ RAMP 'M'
14.6' RT. P.O.T. STA.66+43.19 ℄ S.W. SERV. RD.

P.O.T. STA.435+39.70 END ℄ RAMP 'M'
90' LT. STA.63+83.28 ℄ I-35

P.C. CV. M-3
STA.428+66.98 ℄ RAMP 'M'

RETAINING WALL 'N'

P.O.T. STA.428+16.98 ℄ RAMP 'M'
BEG. 5:1 SHOULDER TAPER

℄ S.W. SERVICE ROAD

R/W

27.67' RT. P.O.T. STA.427+00.00 ℄ RAMP 'M'
END RETAINING WALL "M"

P.O.T. STA.426+70.07 ℄ RAMP 'M' (BK.)=
15' RT. P.O.T. STA.426+70.07 ℄ RAMP 'M' (AHD.)
SHIFT ℄ 15' LT.

P.O.T. STA.425+97.34 ℄ RAMP 'M'
END APPROACH SLAB (FUTURE)

PRES. R/W

4" P.E.

CV. M-2
(FUTURE)

P.T. CV. M-2
STA.425+74.23 ℄ RAMP 'M'

CD3

4" C.S.

FOR RIGHT OF WAY INFORMATION SEE SHTS. 59-63

* TRANS. CURB FROM 0" IN HEIGHT TO 4" MOUNTABLE IN 10'-0"

50' 0 50' 100'
Horizontal Scale in Feet

STA.425+67.34 ℄ RAMP 'M'
END BRIDGE "M" (FUTURE) BEG. APPR. SLAB
ELEV =1303.31

STA.425+97.34 ℄ RAMP 'M'
END APPR. SLAB (FUTURE)
BRIDGE "M" ELEV =1301.76

BM#25 - #6 X 30" LG. REBAR
526.25' LT. ℄ I-35
I-35 STA. 72+81.56 EL=1284.71

BM#27 -"X" ON EAST CURB OF
PARKING LOT. 136.00' LT. ℄ I-35
I-35 STA. 65+16.94 EL=1290.73

OH-ELEC

-5.16.4%

419.00' V.C.
K =70.275

PVI STA.432+04.57
Elev =1289.78

PROFILE FUTURE FIN. GRADE

PROFILE FIN. GRADE AS SHOWN ON CROSS-SECTIONS

PVI STA.435+39.70
Elev =1289.85

VARIABLE GRADE
(SEE RAMP TERMINAL DETAILS)

3:1

CONSTRUCT BRIDGE HEADER

STA.425+85.43 ℄ RAMP 'M'
Elev =1302.38

PVI STA.426+70.07
SHIFT ℄ 15' LT. S-0.00%
Elev =1298.01

+70.07
1298.01

PROFILE EX. GROUND

M1 TG=1287.71
FL=1283.04

LO POINT +32.99
Elev =1288.64

+89.07
1288.86

0.798%

-0.500%

PVI STA.428+79.57
Elev =1287.19

18" RCP
@ 3.72%

FL=1281.34
STUB M1
INTO SW15

GAS

EX 18" RCP

+29.57
1289.19

150.00' V.C.
K =115.561

HI POINT +21.79
Elev =1289.55

+79.57
1289.41

BL RAMP 'G'

+32.51 ℄ RAMP 'M'
CD3 - 10'x4' RCB X-ing

CD3

GAS

RAMP "M"

1321.29 1317.07 1311.96 1306.79 1301.63 1296.53 1292.50 1289.90 1288.72 1288.95 1289.53 1289.31 1288.90 1289.54

422 423 424 425+00 426 427 428 429 430+00 431 432 433 434 435+00

1305 1300 1295 1290 1285 1280 1275 1270 1265 1260

PLAN: SURVEYED, PLOTTED, ALIGNMENT CHECKED, RT. OF WAY CHECKED, NOTE BOOK, NO., BY, DATE

PROFILE: SURVEYED, PLOTTED, ALIGNMENT CHECKED, RT. OF WAY CHECKED, NOTE BOOK, NO., BY, DATE

State Job No. 09032(17) Sheet No. 77

SEPT 23, 2016 - 15:30:18
H:\PROJECTS\2789_CrossRoads_InterX_New\PHASE IA\Roadway\Drawings\2789-PHASE1A-PNP RAMPM.DWG

EXISTING & PROPOSED LIMITS OF ACCESS TO SERVICE ROAD ONLY

SEC. 34, T11N, R3W

NOTE:
FOR DRIVEWAY INFORMATION
SEE SCHEDULE OF DRIVEWAYS
SHEET NO. 51

GARDEN ACRES

SE. 82ND ST.

SE. 79TH

Horizontal Scale in Feet
50' 0 50' 100'

156.09' LT. P.O.T. STA.54+41.03 ℄ I-35=
P.O.T. STA.54+39.73 BEG. ℄ S.W. SERVICE RD.

P.C. CV. SW-1
STA.59+68.56 ℄ S.W. SERVICE RD.

P.O.T. STA.59+54.73 ℄ S.W. SERVICE RD.

P.T. CV. SW-1
STA.61+57.54 ℄ S.W. SERVICE RD.

P.I. STA.63+83.28 ℄ S.W. SERVICE RD.
Δ= 01°08'44.8"LT.

+43.58 CONST.
26' W. ST. RET.

TEMPORARY CONST. EASEMENT

4' TEMPORARY CONST. EASEMENT

P.C. CV. SW-2
STA.66+92.82 ℄ S.W. SERVICE RD.

EXISTING & PROPOSED LIMITS OF ACCESS TO SERVICE ROAD ONLY

5' TEMPORARY CONST. EASEMENT

CONST. 2'-8" CONC. CURB & GUTTER (6" BAR.) SEE SHEET 51

CAUTION: PROP 12" W.L.

PRES. R/W

PUE

R/W

TOP OF CUT

℄ S.W. SERVICE RD.

N 03°16'40.93"E

E-W 1/4 SEC. LINE
N 89°26'40.0" E

EX. RETAINING WALL

℄ RAMP 'G'

RETAINING WALL "A"

℄ CV. SW-1

℄ CV. SW-2

℄ RAMP 'M'

N 0°30'05.4"W

N 01°38'50.2"W

N 0°30'05.4"W

41.27' RT. P.O.T. STA.57+41.71 ℄ S.W. SERV. RD.
BEG. RETAINING WALL "A"

P.O.T. STA.435+39.70 END ℄ RAMP 'M' 25' RT.=
25' RT. P.I. STA.63+83.28 ℄ S.W. SERV. RD.

℄ I-35

25' RT. P.O.T. STA.57+27.64 ℄ S.W. SERV. RD.
BEG. 5:1 SHLD TAPER (0' TO 2'-10")
BEG. TRANS. (6" CURB TO 42" BARRIER)

**TRANS. CURB FROM 6" BARRIER TO 0" IN HEIGHT IN 10'-0"

14.6' RT. P.O.T. STA.66+43.19 ℄ S.W. SERV. RD.=
15.6' RT. P.O.T. STA.432+79.57 ℄ RAMP 'M'

NOSE RAD. PT.
1.6' R

FOR RIGHT OF WAY INFORMATION SEE SHTS. 59-63

N 0°30'21.5" W
N-S SEC. LINE

SEC. 35, T11N, R3W

BM#28 -"X" ON EAST CURB OF PARKING LOT. 154.01' LT. ℄ I-35
I-35 STA. 59+00.05 EL=1298.27

BM#27 -"X" ON EAST CURB OF PARKING LOT. 136.00' LT. ℄ I-35
I-35 STA. 65+16.94 EL=1290.73

PROFILE FIN. GRADE AS SHOWN ON CROSS-SECTIONS

OH-ELEC

TG=1303.68
FL=1298.62
SW1

TG=1297.47
FL=1294.04
SW2

TC=1293.46
FL=1286.63
ON EX. 24" RCP
SW3

TG=1292.82
FL=1287.23
SW4

TC=1291.30
FL=1282.92
& STUB IN
FR SW8 & SW10
SW7

TG=1289.93
FL=1283.11
& STUB IN
FR SW9
SW8

TG=1289.45
FL=1285.20
SW9

TC=1290.18
FL=1284.05
& STUB IN
FR SW11
SW10

TG=1288.72
FL=1284.43
SW11

TC=1291.50
FL=1278.63
SW6

TC=1287.23
FL=1281.64
& STUB IN
FR SW13
SW12

TG=1286.20
FL=1281.74
SW13

SW5 FL=1282.05

FL=1281.05
STUB INTO
SW6 FR SW5

FL=1278.15
STUB INTO
G11 FR SW6

FL=1281.55
STUB INTO
SW6 FR SW7

FL=1287.13
STUB INTO
SW3 FR SW4

FL=1293.85
STUB INTO EXIST.
INLET FR. SW2

EX. 18" RCP

EX. 18" RCP

EX. 24" RCP

VARIABLE GRADE
(SEE RAMP TERMINAL DETAILS)

-2.064%

+50.00
1294.16

54.73
1296.13

EX. 8" SS

EX. 24" RCP

+50.00
1291.35

-0.750%

PROFILE EX. GROUND

+00.00
1287.97

+00.00
1287.28

-0.633%

100' V.C.
K=852.71

PVI STA.67+50.00
Elev= 1287.60

EX. 18" RCP

GAS

STA.54+39.73 ℄ S.W. SERV. RD.
BEGIN CONSTRUCTION
Elev= 1306.79

PVI STA.61+50.00
Elev= 1292.10

24" RCP @ 1.01%

EX. 24" RCP
(REMOVE)

24" RCP @ 1.12%

18" RCP @ 0.89%

EX 60" RCP

S.W. SERVICE ROAD

1306.57 1305.52 1304.64 1303.52 1302.37 1301.31 1300.30 1299.45 1298.33 1297.30 1296.24 1295.20 1293.21 1291.81 1290.97 1290.22 1289.47 1288.72 1287.97 1287.28

53 54 55+00 56 57 58 59 60+00 61 62 63 64 65+00 66 67 68

1310 1305 1300 1295 1290 1285 1280 1275 1270 1265

REVISIONS

DESCRIPTION	DATE

PLAN
SURVEYED
PLOTTED
NOTE BOOK
ALIGNMENT CHECKED
RT. OF WAY CHECKED
NO.
BY
DATE

PROFILE
SURVEYED
PLOTTED
NOTE BOOK
ALIGNMENT CHECKED
RT. OF WAY CHECKED
NO.
BY
DATE

State Job No. 09032(17) Sheet No. 78

SEPT 09, 2016 - 11:05:25
H:\PROJECTS\2789_CrossRoads_InterX_New\PHASE IA\Roadway\Drawings\2789-PHASE1A-PNP SWSERVRD 1.DWG

SEC. 34, T11N, R3W

EXISTING & PROPOSED LIMITS OF ACCESS TO SERVICE ROAD ONLY

REVISIONS	
DESCRIPTION	DATE
1 ADDED DRIVE	09/23/16

FOR RIGHT OF WAY INFORMATION SEE SHTS. 59-63

NOTE:
FOR DRIVEWAY INFORMATION SEE SCHEDULE OF DRIVEWAYS SHEET NO. 51

50' 0 50' 100'
Horizontal Scale in Feet

P.T. CV. SW-2
STA.69+79.13 ℄ S.W. SERVICE RD.

P.T. CV. SW-3
STA.81+75.47 ℄ S.W. SERV. RD.

ADJUST BACKSLOPES TO REMAIN WITHIN R/W

68+00

70

75

80

82+00

R/W

TOP OF CUT

CV. SW-2

CV. SW-3

℄ S.W. SERVICE RD.
N 36°00'18.1"W

32'

SW12 SW13 SW14 SW15 SW16 SW17 SW18 SW19 SW20 SW21 SW22 SW23 SW24 SW25 SW26 SW27 SW28

M1

CD2 CD3

RETAINING WALL 'N'

RETAINING WALL 'A'

℄ RAMP 'M'

℄ RAMP 'G'

℄ RAMP 'C'

PRES. R/W

P.C. CV. SW-3
STA.76+14.77 ℄ S.W. SERV. RD.

℄ I-35

℄ I-240

℄ PRES. I-240

E-W SEC.LINE S 89°27'29.4" W

EX. 8'x4' RCB

420

BM#25 - #6 X 30" LG. REBAR
526.25' LT. ℄ I-35
I-35 STA. 72+81.56 EL=1284.71

BM#24 - #6 X 30" LG. REBAR E. OF BEND IN CREEK. 620.62' RT. L I-240
I-240 STA. 421+26.09 EL=1278.215 =
706.28' LT. L I-35 STA. 74+51.09

TC=1287.23
FL=1281.64
& STUB IN FR SW13

TC=1286.95
FL=1280.64

TG=1284.99
FL=1279.53

TC=1285.28
FL=1279.17
& STUB IN FR SW14 & SW17

TG=1283.82
FL=1277.64
& STUB IN FR SW18 & SW22

TC=1284.41
FL=1273.18

TG=1283.82
FL=1277.52
& STUB IN FR SW21

TC=1283.00
FL=1271.21
& STUB IN FR SW19

TG=1282.56
FL=1278.25

100' V.C.
K=578.81

TG=1279.62
FL=1275.06

TG=1279.72
FL=1276.66

TC=1279.42
FL=1271.30

TG=1278.64
FL=1274.02

TG=1285.57
FL=1281.26
& STUB IN FR M1

18" RCP @ 0.55%
GAS

24" RCP @ 0.71%

24" RCP @ 1.00%

18" RCP @ .52%

18" RCP @ .79%

-0.633%

-0.460%

PROFILE EX. GROUND

+58.40 ℄ S.W. SERV. RD.
CD3 - 10'x4' RCB X-ing
+50.00
1281.91

+50.00
1281.36

+62.90 ℄ S.W. SERV. RD.
CD2 - 10'x5' RCB X-ing

FL=1281.14
& STUB IN FR SW12 & SW15

FL=1281.34
STUB INTO SW15 FR M1

TG=1286.20
FL=1281.74

TG=1284.42
FL=1278.09

FL=1277.35
STUB INTO SW19 FR SW16

FL=1277.42
STUB INTO SW19 FR SW20

TG=1282.83
FL=1278.80

FL=1278.15
STUB INTO SW23 FR SW24

FL=1276.56
STUB INTO SW25 FR SW26

FL=1273.92
STUB INTO SW27 FR SW28

18" RCP @ 8.66%

18" RCP @ 4.30%

24" RCP @ 1.00%

24" RCP @ 1.00%

24" RCP @ 2.00%

PVI STA.77+00.00
Elev= 1281.59

0.5%

FL=1269.58
STUB INTO CD2 FR SW25

FL=1272.21
STUB INTO SW27 FR SW30

OUTLET ℄=1267.80

FL=1269.65
STUB INTO CD3 FR SW23

CD2 INLET ℄=1266.37

F.X. 10" SAN. SEWER

FL=1268.06
STUB INTO CD2 FR SW27

Ex. 8x4 RCB
INLET ℄=1265.00

Ex. 8x4 RCB
OUTLET ℄=1263.70

S.W. SERVICE ROAD

1287.28 1286.65 1286.02 1285.39 1284.75 1284.12 1283.49 1282.85 1282.22 1281.61 1281.13 1280.67 1280.21 1279.75 1279.29

1290 1285 1280 1275 1270 1265 1260 1255 1250

68 69 70+00 71 72 73 74 75+00 76 77 78 79 80+00 81 82

PLAN
SURVEYED
PLOTTED
NOTE BOOK
ALIGNMENT CHECKED
RT. OF WAY CHECKED
NO.
BY
DATE

PROFILE
SURVEYED
PLOTTED
NOTE BOOK
ALIGNMENT CHECKED
RT. OF WAY CHECKED
NO.
BY
DATE

State Job No. 09032(17) Sheet No. 79

SEPT 23, 2016 - 15:25:55
H:\PROJECTS\2789_CrossRoads_InterX_New\PHASE IA\Roadway\Drawings\2789-PHASE1A-PNP SWSERVRD 2.DWG

REVISIONS	
DESCRIPTION	DATE

SEC. 34. T11N. R3W

EXISTING & PROPOSED LIMITS OF ACCESS TO SERVICE ROAD ONLY

P.C. CV. SW-4
STA.84+26.68 ℄ S.W. SERV. RD.

P.T. CV. SW-4
STA.85+85.88 ℄ S.W. SERV. RD.

P.C. CV. SW-5
STA.95+82.78 ℄ S.W. SERV. RD.

25' TEMPORARY CONST. EASEMENT

7' TEMPORARY CONST. EASEMENT

7' TEMPORARY CONST. EASEMENT

CONST. 2'-8" CONC. CURB & GUTTER (6" BAR.) SEE SHEET 51

CONST. 2'-8" CONC. CURB & GUTTER (6" BAR.) SEE SHEET 51

CONST. 2'-8" CONC. CURB & GUTTER (6" BAR.) SEE SHEET 51

163 TONS TYPE 1 PLAIN RIPRAP

50' 0 50' 100'
Horizontal Scale in Feet

SW30 SW29 SW31 SW33 SW35 SW36 SW37 SW39 SW40 SW42 SW43 SW46 SW45 SW49 SW50

TOP OF CUT

R/W

PUE

82+00

97+00

N 80°51'37.4"W

℄ CV. SW-4

℄ S.W. SERVICE RD.
N 84°02'39.4"W

℄ CV. SW45

SW32 SW34 SW38 SW41 SW44 SW47 SW48 SW51

CD1

TOE OF SLOPE

125'

RET. WALL 'E2'

℄ RAMP 'G'

PRES. R/W

G10 G32 G29

℄ I-240

℄ PRESENT I-240

E-W SEC.LINE
S 89°27'29.4" W

N-S 1/4 SEC.LINE
N 0°21'42.2" W

N 0°25'42.4" W

CAUTION:
SANITARY SEWER

FOR RIGHT OF WAY INFORMATION SEE SHTS. 59-63

NOTE:
FOR DRIVEWAY INFORMATION SEE SCHEDULE OF DRIVEWAYS SHEET NO. 51

41.11' RT. P.O.C. STA.96+19.57 ℄ S.W. SERV. RD.
END RETAINING WALL 'E2'

SEC. 27. T11N. R3W

EX. N.W. SERVICE RD.

PLAN
SURVEYED
PLOTTED
ALIGNMENT CHECKED
RT. OF WAY CHECKED
NOTE BOOK
NO.
BY
DATE

BM#23 -"X" ON BASE OF LIGHT POLE
E. SIDE OF PARKING LOT.
439.75' RT. ℄ I-240
I-240 STA. 416+99.26 EL=1282.385

BM#22 -"X" ON CURB OF SIDEWALK
ON N. SIDE BUILDING. 319.36' RT.
℄ I-240
I-240 STA. 413+98.14 EL=1281.85

PROFILE FIN. GRADE AS SHOWN ON CROSS-SECTIONS

PROFILE EX. GROUND

TG=1280.08 FL=1275.84 @ STUB IN FR. SW29 (SW30)
TG=1279.73 FL=1276.65 (SW29)
TC=1278.92 FL=1272.93 (SW31)
TC=1278.58 FL=1271.53 @ STUB IN FR. SW31 @ SW34 (SW33)
TG=1277.52 FL=1273.06 (SW32)
TG=1277.01 FL=1271.68 (SW34)
TG=1276.49 FL=1271.07 @ STUB IN FR SW38 (SW37)
TG=1277.99 FL=1273.53 (SW35)
TC=1277.84 FL=1270.50 (SW36)
TG=1276.49 FL=1271.39 (SW38)
TG=1276.88 FL=1269.69 @ STUB IN FR SW36 (SW39)
TG=1275.69 FL=1270.56 (SW41)
TG=1274.85 FL=1267.12 @ STUB IN FR SW42 (SW43)
TG=1275.92 FL=1267.22 (SW42)
TG=1274.85 FL=1266.98 @ STUB IN FR SW43 (SW44)
TC=1273.28 FL=1266.51 @ STUB IN FR SW50 (SW45)
TG=1273.47 FL=1266.41 @ STUB IN FR SW45 (SW46)
TG=1273.47 FL=1266.18 @ STUB IN FR SW46 (SW47)
TC=1273.10 FL=1270.14 196.48 1273.33 (SW48)
TC=1274.57 FL=1267.86 (SW50)
TG=1274.53 FL=1268.53 (SW49)
TG=1272.92 FL=1268.46 (SW51)

-0.460%

18" RCP @ 4.30%

FL=1272.93 STUB INTO SW31 FR SW32

18" RCP @ 1.07%

FL=1273.43 STUB SW35 INTO SW36

18" RCP @ 0.50%

FL=1271.04 STUB SW33 INTO SW36

FL=1270.97 STUB SW37 INTO SW36

24" RCP @ 0.47%

FL=1270.23 STUB SW40 INTO SW39

SW40 TG=1275.69 FL=1270.33 @ STUB IN FR SW41

24" RCP @ 1.37%

FL=1267.22 STUB IN FR SW39

G32

43" X 26" RCPA

(REMOVE)

(REMOVE)

(REMOVE) EX. 18" RCP

EX. 18" RCP

CD1

EXTEND EXIST. 2-8'x4' RCB 76' RT.

℄=1264.36

EX. 2-8'x4' RCB

+33+00.15 ℄ S.W. SERV. RD. CD1 - 2-8'x4' RCB X'ing

G29

36"X22" RCPA

18" RCP @ 2.29%

24" RCP @ 0.98%

FL=1268.43 STUB INTO SW47 FR SW48

℄ OUT 1263.00

FL=1264.91 STUB INTO G29 FR SW47

FL=1266.60 STUB INTO G32 FR SW34

PROP. 24" SAN. SEWER LINE A

FL=1268.36 STUB IN FR SW49, SW51 @ SW52

PVI STA.96+21.48
Elev= 1272.75

250' V.C.
K=97.66

LO POINT +41.40
Elev= 1273.22

2.100%

18" RCP @ 1.21%

GAS

WATER

EX. 18" SAN. SEWER
EX. 8" SS.

PROP. 12" SAN SEWER LINE B

BM#21 -"X" ON HEADWALL DRAINAGE
STRUCTURE 271.68' RT. ℄ 240
I-240 STA. 408+36.59 EL=1275.43

S.W. SERVICE ROAD

1279.29 1278.83 1278.37 1277.91 1277.45 1276.99 1276.53 1276.07 1275.61 1275.15 1274.69 1274.23 1273.77 1273.31 1273.40 1274.51

1285 1280 1275 1270 1265 1260 1255 1250 1245

82 83 84 85+00 86 87 88 89 90+00 91 92 93 94 95+00 96 97

PROFILE
SURVEYED
PLOTTED
ALIGNMENT CHECKED
RT. OF WAY CHECKED
NOTE BOOK
NO.
BY
DATE

State Job No. 09032(17) Sheet No. 80

SEPT. 09, 2016 - 11:10:23
H:\PROJECTS\2789__CrossRoads__InterX__New\PHASE 1A\Roadway\Drawings\2789-PHASE1A-PNP SWSERVRD 3.DWG

SEC. 34, T11N, R3W

EXISTING & PROPOSED LIMITS OF ACCESS TO SERVICE ROAD ONLY

P.T. CV. SW-5
STA.98+59.39 ℄ S.W. SERV. RD.

P.I. STA.105+73.65 ℄ S.W. SERV. RD.
℄ SHIELDS BLVD.

CONST. 2'-8" CONC. CURB & GUTTER (6" BAR.) SEE SHEET 51

48.66 CONST. 28' W. ST. RETURN

ATTENTION:
LEAKING UNDERGROUND STORAGE TANK (LUST) SITE
OCC CASE NO. 55-08554/064-0831
SEE ENVIRONMENTAL NOTES

ATTENTION:
LEAKING UNDERGROUND STORAGE TANK (LUST) SITE
OCC CASE NO. 55-08224/064-1702
SEE ENVIRONMENTAL NOTES

SHIELDS BLVD.

R/W TOE OF SLOPE

PUE PRES. R/W

PUE R/W PRES. R/W

97+00

100

105

110

111+00

GV. SW-5

℄ S.W. SERVICE RD.
S 87°39'27.70"W

SW53 SW52 SW54 SW55

RET. WALL E2

E-W SEC. LINE
N 89°27'41.4" E

Ex. MSE Wall

EXIST. M.H. LOCATED FROM F-369(094) PLANS. CONTRACTOR TO FIELD VERIFY.

Ex. Retaining Wall

39.83' RT., P.O.C. STA. 97+60.79 ℄ S.W. SERV. RD.
BEG. RETAINING WALL 'E2'

P.O.T. STA.105+22.20 ℄ S.W. SERV. RD.
END CONSTRUCTION

℄ I-240

CAUTION:
PROP 12" W.L.

400

395

NOTE:
FOR DRIVEWAY INFORMATION SEE SCHEDULE OF DRIVEWAYS SHEET NO. 51

Ex. Retaining Wall

N.W. SERVICE RD.

FOR RIGHT OF WAY INFORMATION SEE SHTS. 59-63

SEC. 27, T11N, R3W

R/W

50' 0 50' 100
Horizontal Scale in Feet

BM#20 -"X" ON CURB @ P.I. OF W. ENTRANCE TO CAR DEALERSHIP.
157.12' RT. ℄ 240
I-240 STA. 402+17.71 EL=1276.76

BM#19 -"X" ON CONC. BASE OF LIGHT POLE N. OF ENTERPRISE RENTAL. 155.12' RT. ℄ I-240
I-240 STA. 395+58.73 EL=1280.87

BM#18 -"X" ON E. CURB OF 3RD ENTR. FROM W. ON N. SIDE NISSAN DEALERSHIP. 139.51' RT. ℄ I-240
I-240 STA. 389+27.33 EL=1270.28

PROFILE FIN. GRADE AS SHOWN ON CROSS-SECTIONS

250' V.C.
K=97.66

+46.48
1275.39

TC=1277.45 SW52

SW53 TG=1275.98
FL=1271.52

2.100%

EX. 18" RCP

EX. 18" RCP

18" RCP @ 1.21%
GAS

FL=1271.42 SW52
& STUB IN
FR SW53

+50.00
1279.65

300' V.C.
K=86.72

PVI STA.101+00.00
Elev= 1282.80

HI POINT +32.11
Elev= 1281.56

+50.00
1280.76

-1.359%

+22.20
1279.78

FL=1274.41
& STUB IN
FR SW55

200' V.C.
K=53.20

LO POINT +94.52
Elev= 1279.29

TG=1278.99
FL=1274.53 SW55

+22.20
1280.82

2.400%

SW54 TG=1278.99

18" @ 3.00%

EXIST. M.H. LOCATED FROM F-369(094) PLANS. CONTRACTOR TO FIELD VERIFY.

PVI STA.104+22.20
Elev= 1278.42

FL=1271.43
STUB IN FR.
SW54

CL SHIELDS BLVD.

PROFILE EX. GROUND

EX. 18" RCP

PROP. 12" WATER LINE C

S.W. SERVICE ROAD

1290 1285 1280 1275 1270 1265 1260 1255 1250

1274.51 1276.50 1278.60 1280.56 1281.50 1281.30 1280.08 1279.29 1280.33

97 98 99 100+00 101 102 103 104 105+00 106 107 108 109 110+00 111

REVISIONS
DESCRIPTION DATE

PLAN
SURVEYED
PLOTTED
NOTE BOOK ALIGNMENT CHECKED
NO. RT. OF WAY CHECKED
BY DATE

PROFILE
SURVEYED
PLOTTED
NOTE BOOK ALIGNMENT CHECKED
NO. RT. OF WAY CHECKED
BY DATE

State Job No. 09032(17) Sheet No. 81

SEPT 09, 2016 - 11:10:60
H:\PROJECTS\2789__CrossRoads__InterX__New\PHASE IA\Roadway\Drawings\2789-PHASE1A-PNP SWSERVRD 4.DWG

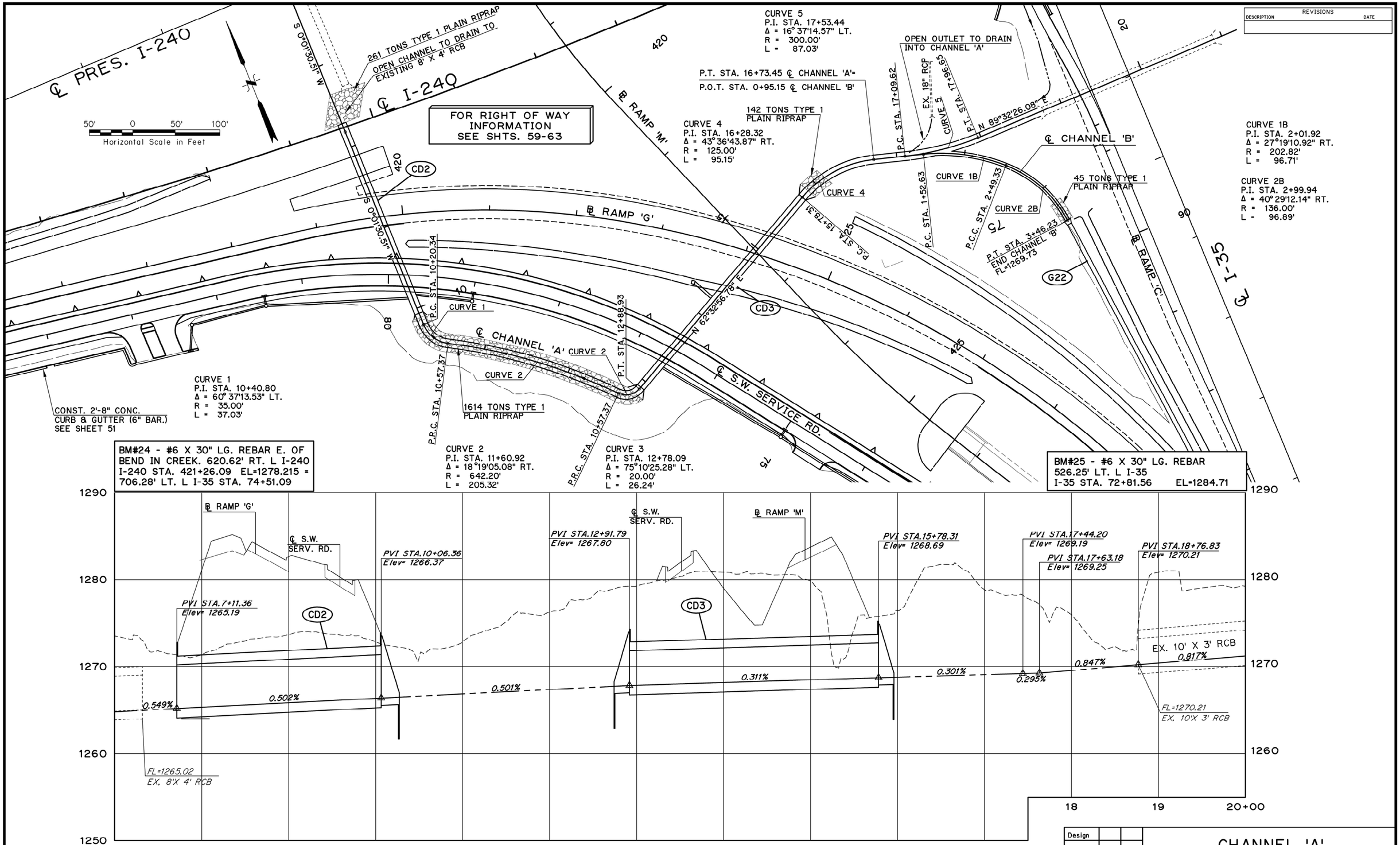

REVISIONS	
DESCRIPTION	DATE

Design	
Drawn	
Checked	
Approved	
Squad	POE

CHANNEL 'A' PLAN & PROFILE SHEET

State Job No. 09032(17) Sheet No. 82

SEPT 09, 2016 - 11:12:53
H:\PROJECTS\2709_CrossRoads_InterX_New\PHASE IA\Roadway\Drawings\2709-PHASE1A-PNP CHANNEL A-REV.DWG

REVISIONS	
DESCRIPTION	DATE

I-240 & RAMP 'G'
SUPERELEVATION TRANSITION
K=0.00015000 ft./ft.

S=2.84% (FULL)
I-240 & RAMP 'G'

59' RT. P.O.C. STA.403+46.03 ℄ I-240=
P.O.T. STA.403+46.03 BEG. ℄ RAMP 'G'
END RETAINING WALL 'E2' 13.5' RT.
BEG. SHLD. TAPER (12' TO 10')

26.5' P.O.C. STA.404+42.00 ℄ I-240
END MILL & OVERLAY-BEG. TEMP. CONN.

35' RT. P.O.C. STA.403+00.00 ℄ I-240
BEG. CONSTRUCTION-BEG. MILL & OVERLAY

59' RT. P.O.C. STA.402+00.00 ℄ I-240=
BEGIN INCIDENTAL CONSTRUCTION

STA.405+98.69 ℄ I-240=
STA.405+96.83 ℄ RAMP 'G'

STA.406+54.69 ℄ I-240=
STA.406+51.50 ℄ RAMP 'G'

NOTE:
ELEV. SHOWN THRU MILL & OVERLAY AND TEMPORARY CONNECTION SECTIONS SHALL BE FIELD VERIFIED AND ADJUSTED IF NECESSARY TO MEET EXISTING OR NEWLY CONSTRUCTED PAVING

℄ PRES. I-240

EXISTING BARRIER

EXISTING PAVING

P.T. CV. CV-1
STA.406+46.03 ℄ I-240

P.O.C. STA.407+32.00 ℄ FUTURE I-240
END TEMP. CONN. E.B. LANES

℄ PROP. I-240

405

410

411+00

VARIES

2.0% NC

℄ RAMP 'G'

71' RT. P.O.C. STA.403+77.33 ℄ I-240=
10' RT. P.O.T. STA.403+77.68. ℄ RAMP 'G'
END SHOULDER TAPER

S=FULL

FLAT

95

96

3.7%

2.0%

0.0%

+69.41

+24.58

STA.96+07.51 ℄ S.W. SERV. RD.

STA.94+79.75 ℄ S.W. SERV. RD.

CONST. 2'-8" CONC.
CURB & GUTTER (6" BAR.)
SEE SHEET 51

71' RT. P.O.C. STA.406+46.03 ℄ I-240=
P.I. STA.406+42.84 ℄ RAMP 'G'

CONST. 2'-8" CONC.
CURB & GUTTER (6" BAR.)
SEE SHEET 51

S=3.70% (FULL)
S.W. SERV. RD.

S.W. SERV. RD.
SUPERELEVATION TRANSITION
K=0.0004461538 ft./ft.

S=N.C.

P.C. CV. SW-5
STA.95+82.78 ℄ S.W. SERV. RD.

1260.33• —DENOTES FINISHED GRADE ELEVATION *

1260.46• —DENOTES EXISTING ELEVATION * (TOP OF OVERLAY/TEMP. CONN.)

(1260.46)• —DENOTES FINISHED GRADE ELEVATION * (FUTURE CONTRACT)

—DENOTES PROPOSED CONSTRUCTION

—DENOTES MILL & OVERLAY/TEMP. CONN.

30' 0 30' 60'
Horizontal Scale in Feet

FOR ADDITIONAL INFORMATION SEE PLAN & PROFILE SHEETS

* SPOT ELEVATIONS SHOWN ARE FINISHED GRADE TOP OF PAVING (BOTTOM OF FUTURE PERMEABLE FRICTION COURSE) TOP OF OVERLAY/TEMP. CONNECTION

Design		
Drawn		
Checked		
Approved		
Squad	POE	

RAMP TERMINAL DETAILS RAMP 'G'

State Job No. 09032(17) Sheet No. 83

SEPT 09, 2016 - 11:14:04
H:\PROJECTS\2789_CrossRoads_InterX_New\PHASE IA\Roadway\Drawings\2789-PHASE 1A RTERM G1.DWG

REVISIONS	
DESCRIPTION	DATE

1260.33* — DENOTES FINISHED GRADE ELEVATION *

(1260.46)* — DENOTES FINISHED GRADE ELEVATION * (FUTURE CONTRACT)

DENOTES PROPOSED CONSTRUCTION

* SPOT ELEVATIONS SHOWN ARE FINISHED GRADE TOP OF PAVING (BOTTOM OF FUTURE PERMEABLE FRICTION COURSE)

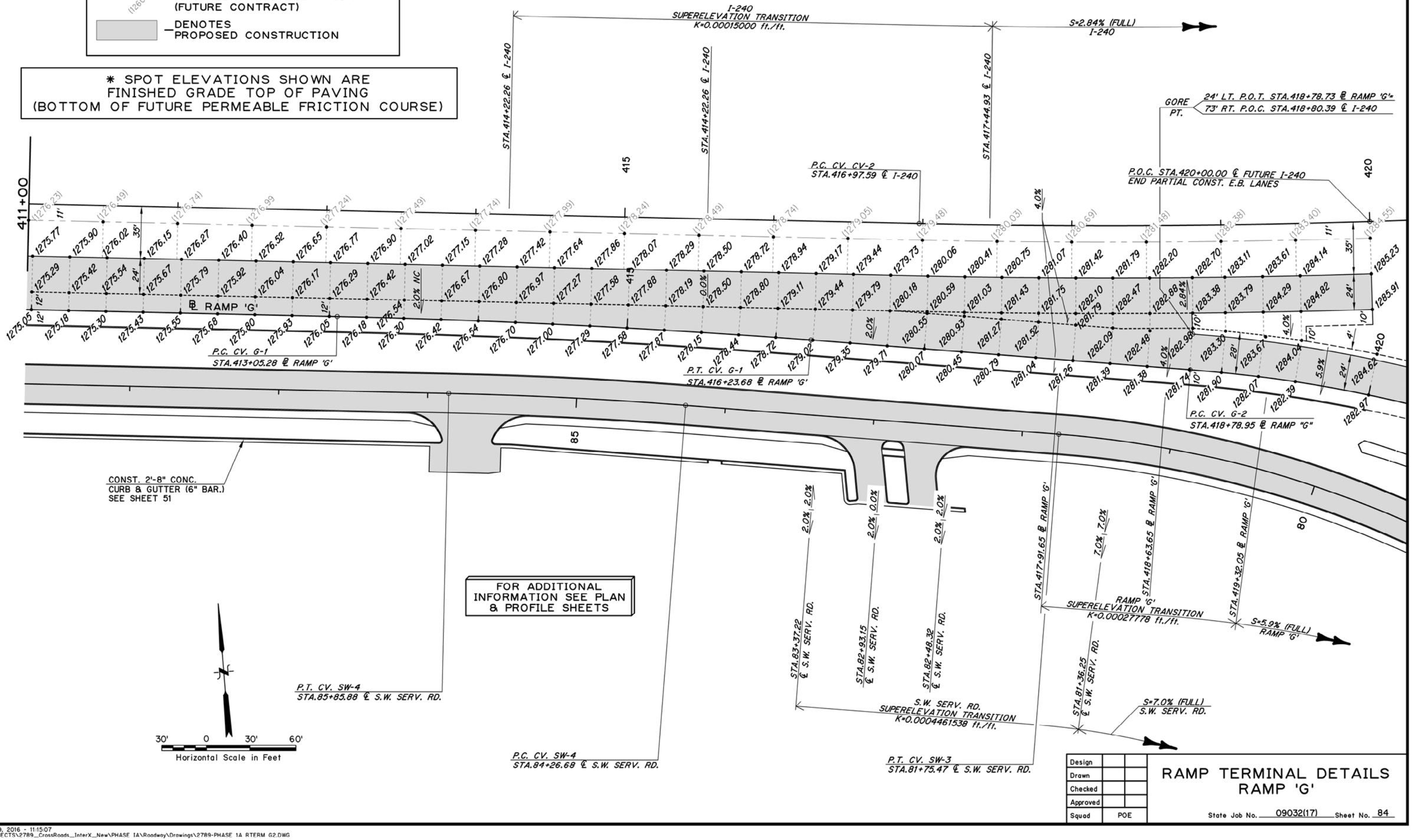

Design		
Drawn		
Checked		
Approved		
Squad	POE	

RAMP TERMINAL DETAILS RAMP 'G'

State Job No. 09032(17) Sheet No. 84

SEPT 09, 2016 - 11:15:07
H:\PROJECTS\2789_CrossRoads_InterX_New\PHASE 1A\Roadway\Drawings\2789-PHASE 1A RTERM G2.DWG

REVISIONS		
	DESCRIPTION	DATE
1	ADDED DRIVE	09/23/16

RAMP 'G'
SUPERELEVATION TRANSITION
K=0.00027778 ft./ft.

S=5.6% (FULL)
RAMP 'G'

S=N.C.
RAMP 'G'

STA.433+54.75
RAMP 'G'

STA.434+81.47
RAMP 'G'

STA.434+81.47
RAMP 'G'

30' 0 30' 60'
Horizontal Scale in Feet

FOR ADDITIONAL INFORMATION SEE PLAN & PROFILE SHEETS

P.O.T. STA.94+13.47 END ℄ RAMP 'C'=
47' LT. P.O.T. STA.70+17.02 ℄ I-35
END LANE TAPER, BEG. I-35 OUTSIDE SHOULDER CONSTRUCTION

28' LT. P.O.T. STA.434+05.15 ℄ RAMP 'G'=
67' LT. P.O.T. STA.69+39.64 ℄ I-35

GORE PT.

24' LT. P.O.C. STA.432+55.21 ℄ RAMP 'G'=
57' LT. P.O.T. STA.68+56.12 ℄ I-35

32.28' RT. P.O.C. STA.430+50.00 ℄ RAMP 'G'
BEGIN RETAINING WALL "A"

P.O.C. STA.430+00.00 ℄ RAMP 'M'
BEGIN PAVING

P.T. STA.434+05.15 ℄ RAMP 'G'=
71' LT. P.O.T. STA.67+03.48 ℄ I-35

℄ I-35

RAMP 'M'
SUPERELEVATION TRANSITION
K=0.00036000 ft./ft.

℄ RAMP 'C'

℄ RAMP 'G'

RETAINING WALL "A"

℄ RAMP 'M'

℄ S.W. SERV. RD.

P.O.T. STA.435+39.70 END ℄ RAMP 'M'=
90' LT. STA.63+83.28 ℄ I-35

13' RT. P.O.T. STA.434+89.57 ℄ RAMP 'M'=
13' RT. P.O.T. STA.64+33.16 ℄ S.W. SERV. RD.

S=8.0% (FULL)
S.W. SERV. RD.

P.O.C. STA.431+88.84 ℄ RAMP 'M'
BEG. TAPER 15' RT. (15' TO 14')
P.C. CV. SW-2
STA.66+92.82 ℄ S.W. SERV. RD.

NOSE RAD. PT.
1.6' R

15.6' RT. P.O.T. STA.432+79.57 ℄ RAMP 'M'=
14.6' RT. P.O.T. STA.66+43.19 ℄ S.W. SERV. RD.

P.T. CV. M-3
STA.432+39.88 ℄ RAMP 'M'
END TAPER 14' RT

S.W. SERV. RD.
SUPERELEVATION TRANSITION
K=0.0004461538 ft./ft.

P.T. CV. SW-2
STA.69+79.13 ℄ S.W. SERV. RD.

P.C. CV. M-3
STA.428+66.98 ℄ RAMP 'M'

P.O.T. STA.428+16.98 ℄ RAMP 'M'
BEG. 5:1 SHOULDER TAPER

S=N.C.
S.W. SERV. RD.

S=N.C.
S.W. SERV. RD.

STA.69+34.30 ℄ S.W. SERV. RD.

STA.67+37.65 ℄ S.W. SERV. RD.

STA.66+03.17 ℄ S.W. SERV. RD.

STA.65+58.34 ℄ S.W. SERV. RD.

STA.65+13.51 ℄ S.W. SERV. RD.

1260.33• —DENOTES FINISHED GRADE ELEVATION *

1260.46• —DENOTES EXISTING ELEVATION *

—DENOTES PROPOSED PAVING

* SPOT ELEVATIONS SHOWN ARE FINISHED GRADE TOP OF PAVING

Design		
Drawn		
Checked		
Approved		
Squad	POE	

RAMP TERMINAL DETAILS RAMP 'G'

State Job No. 09032(17) Sheet No. 85

SEPT 23, 2016 - 15:06:56
H:\PROJECTS\2789_CrossRoads_InterX_New\PHASE IA\Roadway\Drawings\2789-PHASE 1A RTERM G3.DWG

REVISIONS	
DESCRIPTION	DATE

40' 0 40' 80'
Horizontal Scale in Feet

P.O.T. STA.54+39.73 BEG. ℄ S.W. SERVICE RD.

P.C. CV. SW-1
STA.59+68.56 ℄ S.W. SERVICE RD.

P.O.T. STA.59+54.73 ℄ S.W. SERVICE RD.

P.T. CV. SW-1
STA.61+57.54 ℄ S.W. SERVICE RD.

P.I. STA.63+83.28 ℄ S.W. SERVICE RD.
Δ= 01°08'44.8"LT.

LONGITUDINAL JOINT

℄ S.W. SERVICE RD.

℄ S.W. SERVICE RD.

55 60 65

13.4' 15' 15' 13' 12' 12' 13' 15' 12.1' 12.9' 13'

STA. 66+00.00

℄ RAMP 'G'

41.27' RT. P.O.T. STA.57+41.71 ℄ S.W. SERV. RD.
BEG. RETAINING WALL "A"

P.O.T. STA.435+39.70 END ℄ RAMP 'M' 25' RT.=
25' RT. P.I. STA.63+83.28 ℄ S.W. SERV. RD.

445 440

25' RT. P.O.T. STA.57+27.64 ℄ S.W. SERV. RD.
BEG. 5:1 SHLD TAPER (0' TO 2'-10")
BEG. TRANS. (6" CURB TO 42" BARRIER)

* - RAMP 'G' - MATCH EXISTING TRANSVERSE JOINTS, 15' MAX. UNLESS OTHERWISE NOTED.

LEGEND

——— – – ——— LONGITUDINAL JOINT
---------- CONTRACTION JOINT
———————— EXPANSION JOINT

Design		
Drawn		
Checked		
Approved		
Squad	POE	

JOINT LAYOUT
SHEET 1 OF 5

State Job No. 09032(17) Sheet No. 86

SEPT 08, 2016 - 19:56:52
H:\PROJECTS\2789_CrossRoads_InterX_New\PHASE 1A\Roadway\Drawings\2789-PHASE1A_JOINT_1.DWG

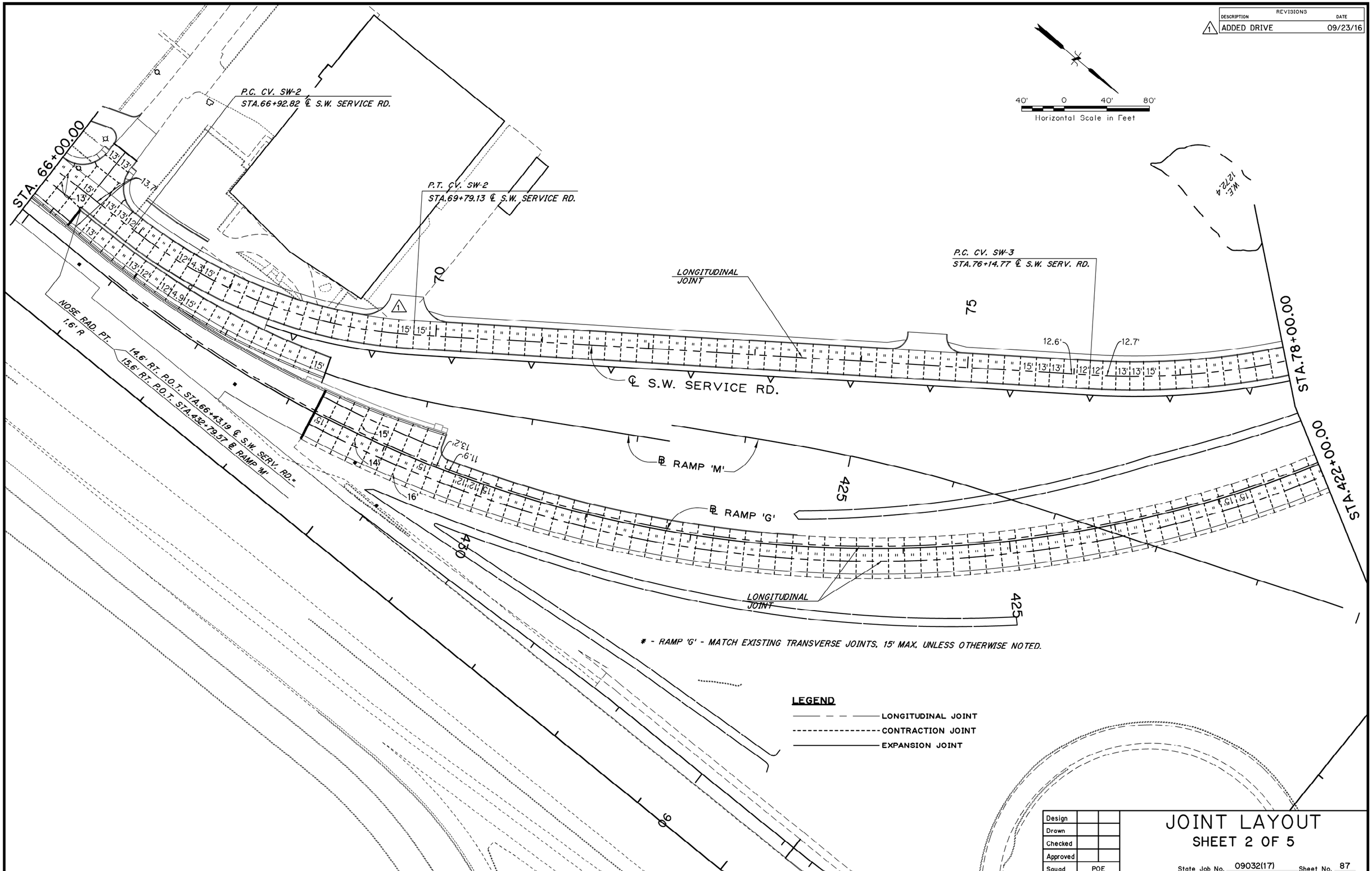

SEPT 23, 2016 - 14:56:44
H:\PROJECTS\2789_CrossRoads_InterX_New\PHASE IA\Roadway\Drawings\2789-PHASE1A_JOINT_2.DWG

REVISIONS	
DESCRIPTION	DATE

LEGEND

- LONGITUDINAL JOINT
- CONTRACTION JOINT
- EXPANSION JOINT

40' 0 40' 80'
Horizontal Scale in Feet

P.T. CV. SW-3
STA.81+75.47 ℄ S.W. SERV. RD.

P.C. CV. SW-4
STA.84+26.68 ℄ S.W. SERV. RD.

P.T. CV. SW-4
STA.85+85.88 ℄ S.W. SERV. RD.

STA.78+00.00

STA.422+00.00

STA.89+00.00

LONGITUDINAL JOINT

LONGITUDINAL JOINT

80

85

420

415

13.2'

12.2'

15' 15' 15' 13' 12' 15' 15' 15'

℄ S.W. SERVICE RD.

℄ RAMP 'G'

℄ PROPOSED I-240

℄ EXISTING I-240

Design		
Drawn		
Checked		
Approved		
Squad	POE	

JOINT LAYOUT
SHEET 3 OF 5

State Job No. 09032(17) Sheet No. 88

SEPT 08, 2016 - 19:57:19
H:\PROJECTS\2789_CrossRoads_InterX_New\PHASE IA\Roadway\Drawings\2789-PHASE1A_JOINT_3.DWG

REVISIONS	
DESCRIPTION	DATE

LEGEND

- LONGITUDINAL JOINT
- CONTRACTION JOINT
- EXPANSION JOINT

40' 0 40' 80'
Horizontal Scale in Feet

P.C. CV. SW-5
STA.95+82.78 ℄ S.W. SERV. RD.

P.T. CV. SW-5
STA.98+59.38 ℄ S.W. SERV. RD.

LONGITUDINAL JOINT

STA.89+00.00

STA. 101+00.00

℄ S.W. SERVICE RD.

℄ RAMP 'G'

℄ PROPOSED I-240

℄ EXISTING I-240

12.9' 12.6' 15' 12' 16' 15' 15' 15' 15' 14' 14' 15' 13.5'

90 95 100 410 405 400

Design		
Drawn		
Checked		
Approved		
Squad	POE	

JOINT LAYOUT
SHEET 4 OF 5

State Job No. 09032(17) Sheet No. 89

SEPT 08, 2016 - 19:57:33
H:\PROJECTS\2789_CrossRoads_InterX_New\PHASE IA\Roadway\Drawings\2789-PHASE1A_JOINT_4.DWG

REVISIONS	
DESCRIPTION	DATE



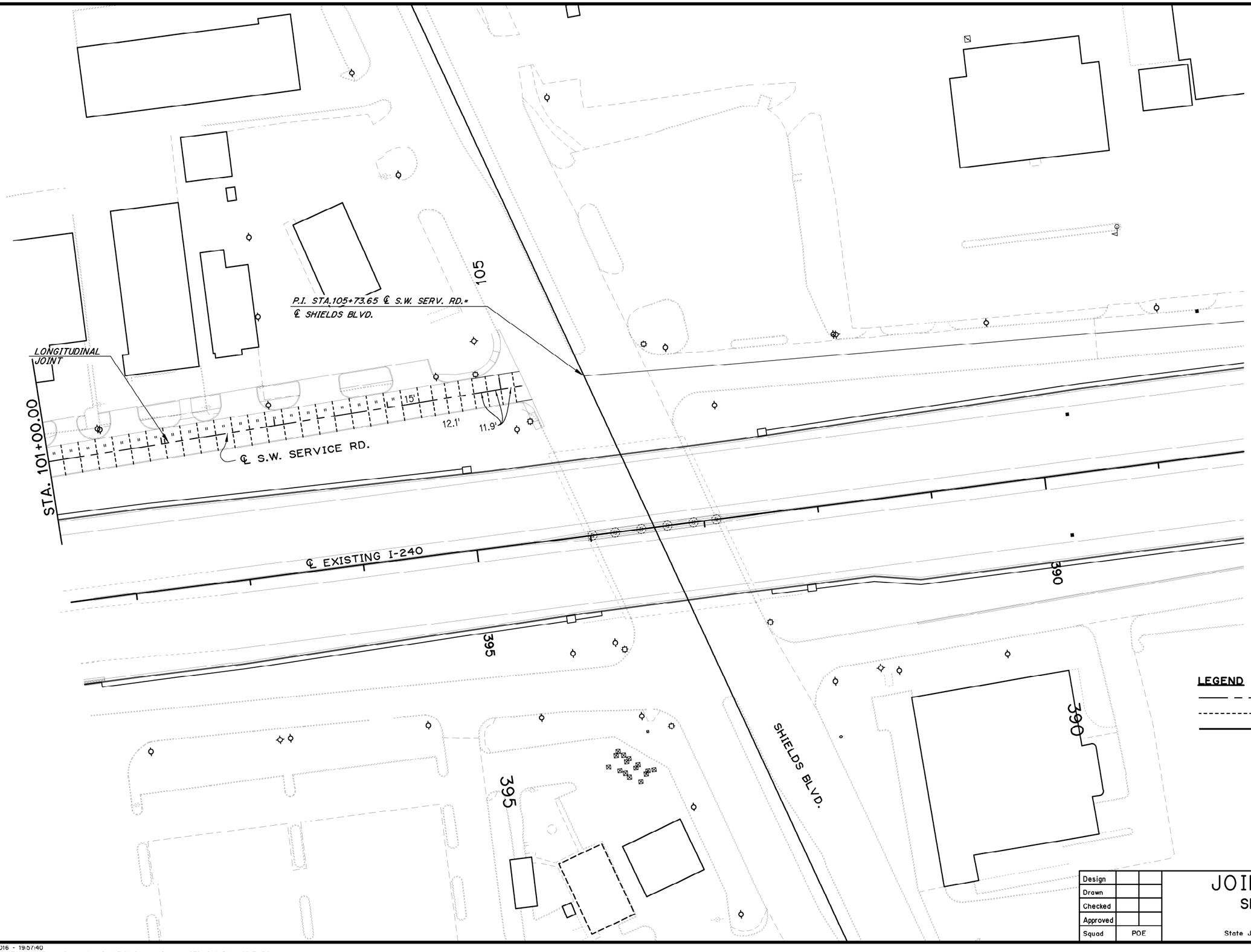

LEGEND

- LONGITUDINAL JOINT
- CONTRACTION JOINT
- EXPANSION JOINT

Design		
Drawn		
Checked		
Approved		
Squad	POE	

JOINT LAYOUT
SHEET 5 OF 5

State Job No. 09032(17) Sheet No. 90

SEPT 08, 2016 - 19:57:40
H:\PROJECTS\2789_CrossRoads_InterX_New\PHASE IA\Roadway\Drawings\2789-PHASE1A_JOINT_5.DWG

REVISIONS		
	DESCRIPTION	DATE
1	ADDED DRIVE	09/23/16

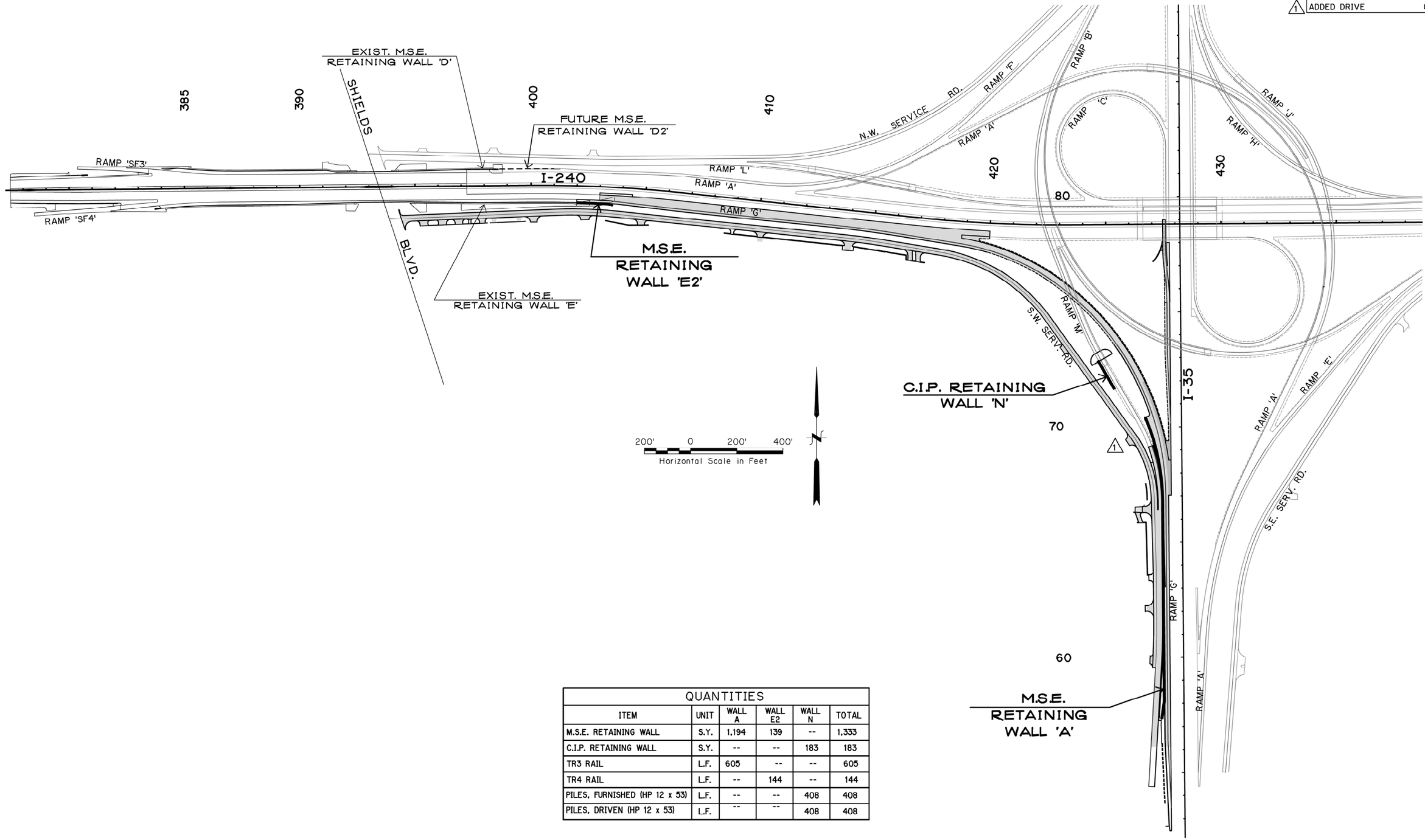

QUANTITIES					
ITEM	UNIT	WALL A	WALL E2	WALL N	TOTAL
M.S.E. RETAINING WALL	S.Y.	1,194	139	--	1,333
C.I.P. RETAINING WALL	S.Y.	--	--	183	183
TR3 RAIL	L.F.	605	--	--	605
TR4 RAIL	L.F.	--	144	--	144
PILES, FURNISHED (HP 12 x 53)	L.F.	--	--	408	408
PILES, DRIVEN (HP 12 x 53)	L.F.	--	--	408	408

OKLAHOMA COUNTY

Design		
Drawn		
Checked		
Approved		
Squad	POE	

RETAINING WALL LOCATION MAP

State Job No. 09032(17) Sheet No. 91

SEPT 26, 2016 - 09:00:29
H:\PROJECTS\2789_CrossRoads_InterX_New\PHASE IA\Bridge\CADDrawings\1A RetWalls\PHASE1A-RETWALL-OVERVIEW.DWG

REVISIONS	
DESCRIPTION	DATE

TEMPORARY SHORING:
TEMPORARY SHORING SHALL BE THE RESPONSIBILITY OF THE CONTRACTOR AND SHALL BE DESIGNED BY A REGISTERED PROFESSIONAL ENGINEER IN THE STATE OF OKLAHOMA. DESIGN CALCULATIONS AND DRAWINGS SHALL BE SUBMITTED TO ODOT BRIDGE DIVISION FOR APPROVAL, PRIOR TO CONSTRUCTION. THE LIMITS OF THE SHORING ARE TO BE DETERMINED BY THE CONTRACTOR. SEE SECTION 502.04.D OF THE 2009 STANDARD SPECIFICATIONS. ALL COST OF TEMPORARY SHORING TO BE INCLUDED IN COST OF "TEMPORARY EARTH RETAINAGE" ITEM.

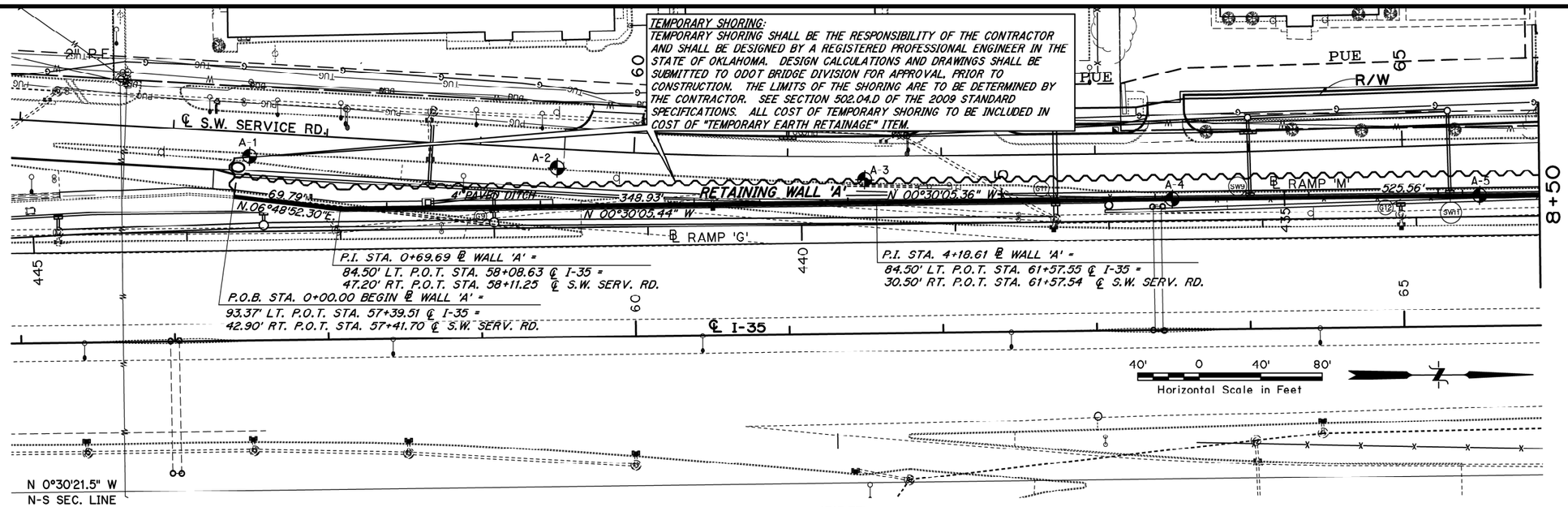

1313.77'
RETAINING WALL 'A'

NOTE:
TR3 RAIL NOT SHOWN FOR CLARITY. SEE SHEET NO. 100, 101A AND STD. TR3-2 FOR DETAILS.

NOTE:
ARCHITECTURAL FORMLINER AND DETAILS WILL BE PROVIDED AT A LATER DATE BY ODOT.

350 L.F. TR3 RAIL
STA. 0+00.00 TO STA. 3+50.00

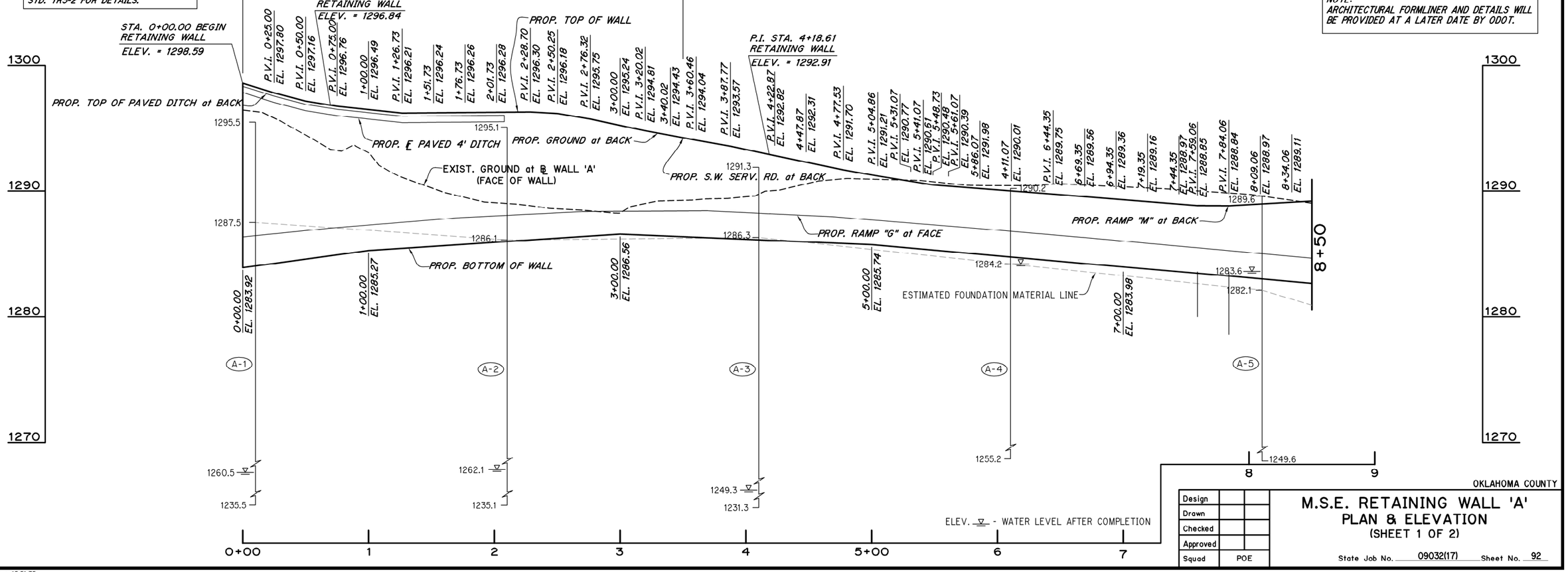

OKLAHOMA COUNTY

Design		
Drawn		
Checked		
Approved		
Squad	POE	

M.S.E. RETAINING WALL 'A' PLAN & ELEVATION
(SHEET 1 OF 2)

State Job No. 09032(17) Sheet No. 92

SEPT 07, 2016 - 15:51:35
H:\PROJECTS\2789_CrossRoads_InterX_New\PHASE IA\Bridge\CADDrawings\1A RetWalls\PHASE1A-PNP RETWALL A 1.DWG

REVISIONS		
	DESCRIPTION	DATE
1	ADDED DRIVE	09/23/16

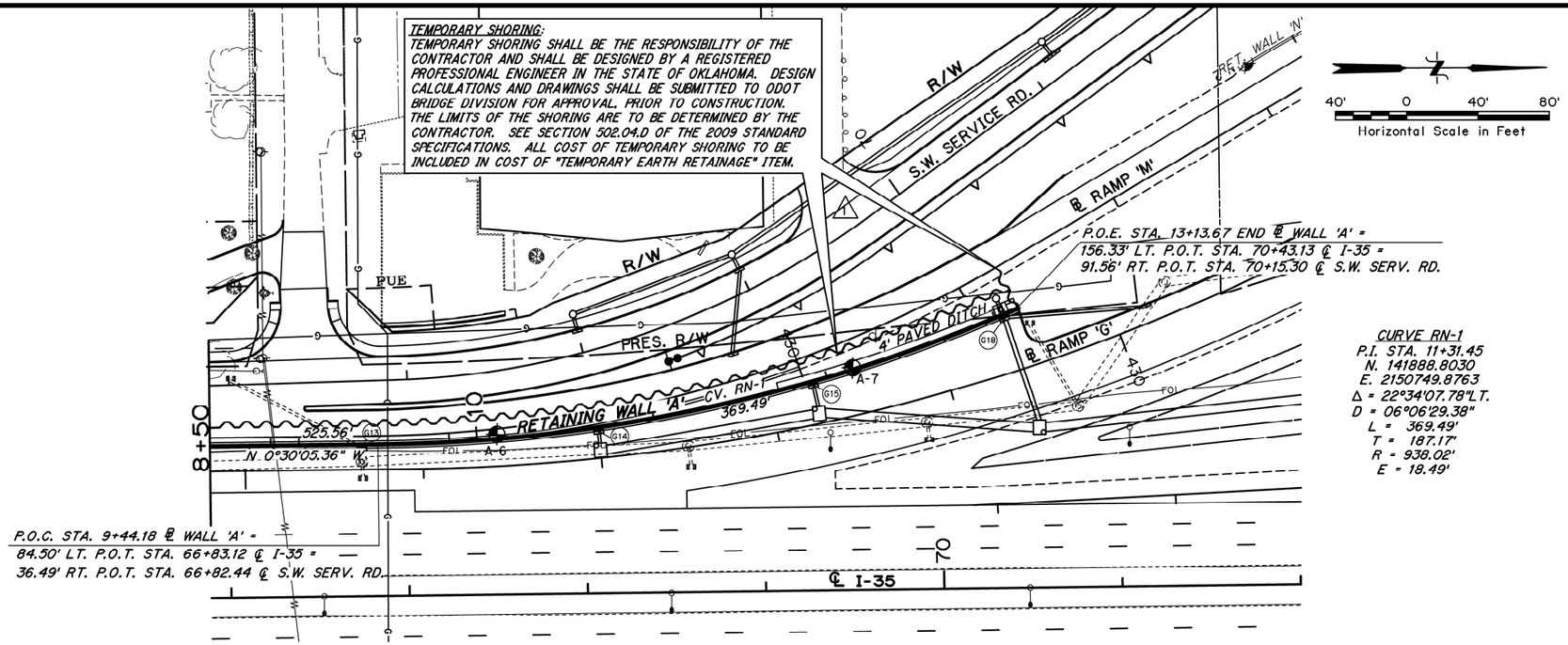

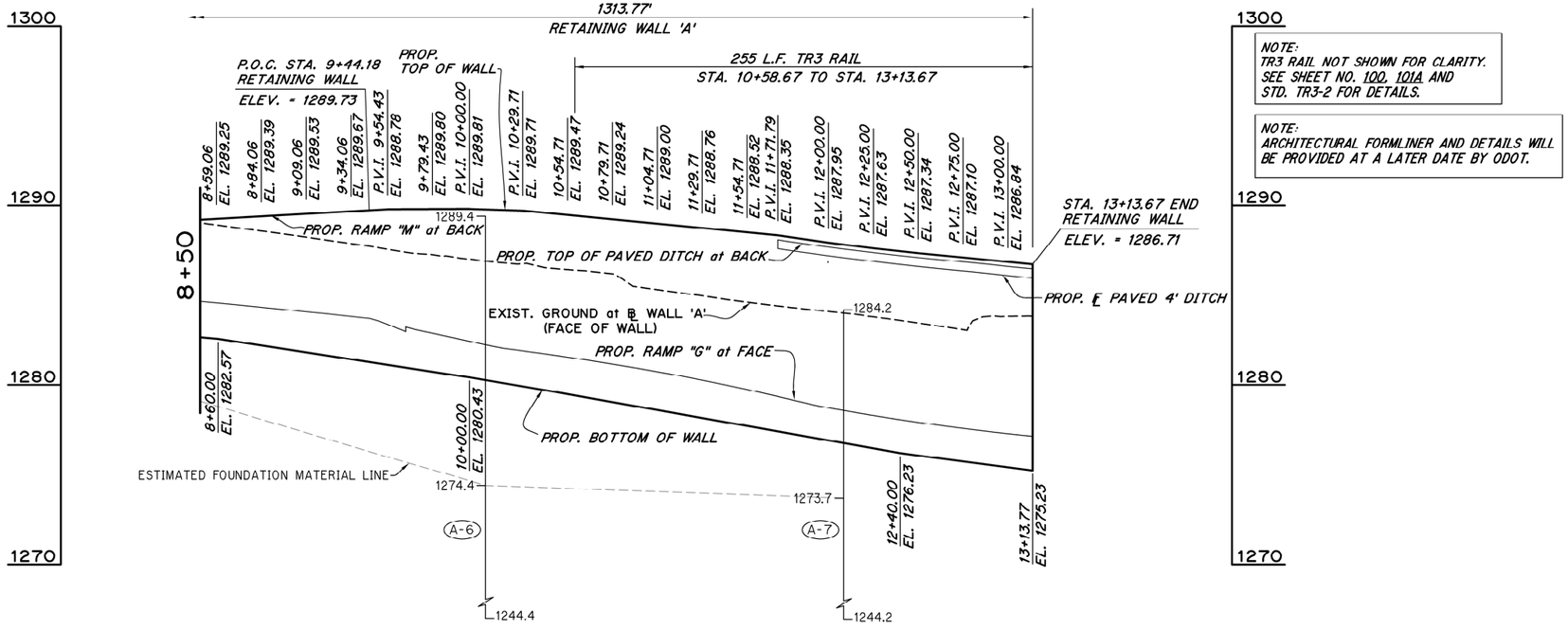

NOTE:
TR3 RAIL NOT SHOWN FOR CLARITY. SEE SHEET NO. 100, 101A AND STD. TR3-2 FOR DETAILS.

NOTE:
ARCHITECTURAL FORMLINER AND DETAILS WILL BE PROVIDED AT A LATER DATE BY ODOT.

ELEV. ▽ - WATER LEVEL AFTER COMPLETION

OKLAHOMA COUNTY

Design		
Drawn		
Checked		
Approved		
Squad	POE	

M.S.E. RETAINING WALL 'A' PLAN & ELEVATION
(SHEET 2 OF 2)

State Job No. 09032(17) Sheet No. 93

SEPT 26, 2016 - 08:30:13
H:\PROJECTS\2789_CrossRoads_InterX_New\PHASE IA\Bridge\CADDrawings\1A RetWalls\PHASE1A-PNP RETWALL A 2.DWG

REVISIONS	
DESCRIPTION	DATE

Boring Number A-1
Station: 57+50
Offset: 120 Ft. Lt.

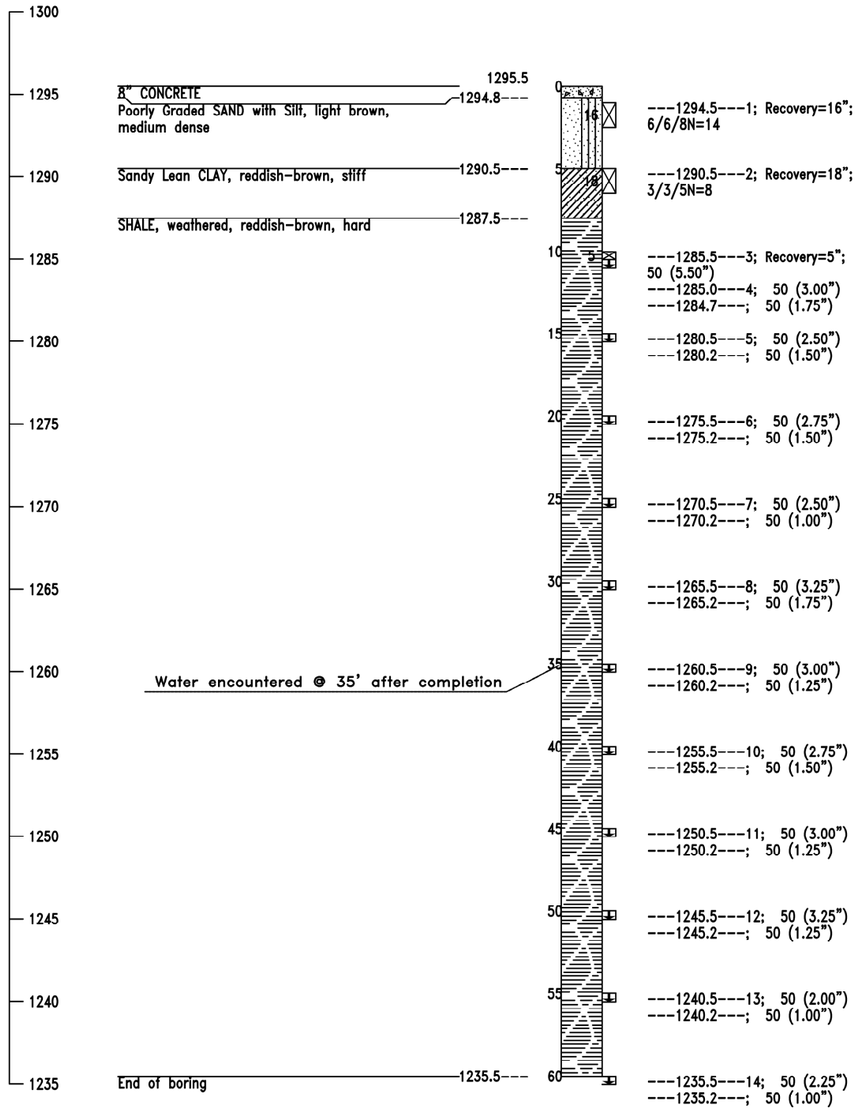

Boring Number A-2
Station: 59+50
Offset: 110 Ft. Lt.

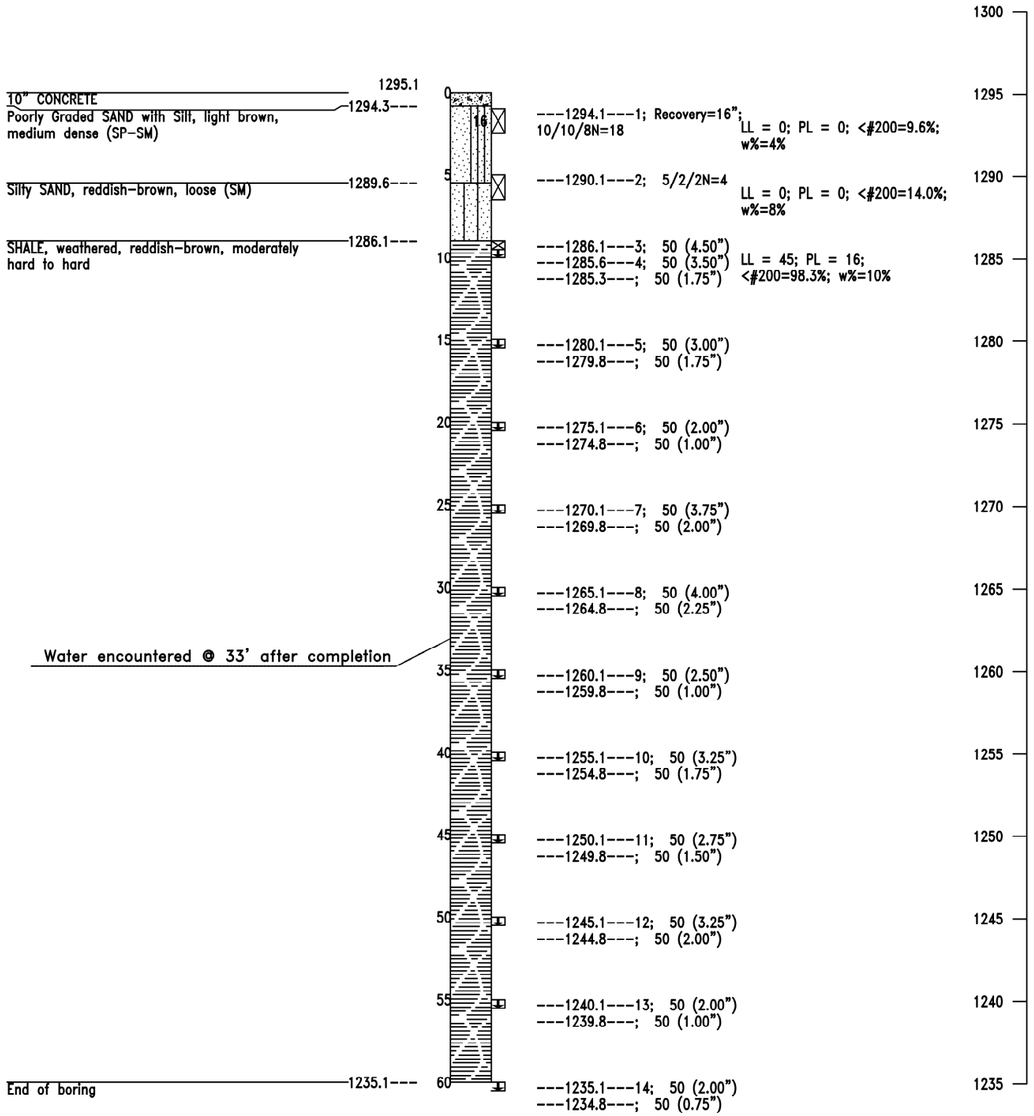

GEOLOGIC STATEMENT

"Division Four" of the "Engineering Classification of Geological Materials", published by the Oklahoma Department of Transportation (ODOT) indicates that below alluvium, the site is underlain by the Hennessey Unit (Phy) in Oklahoma County. The geologic unit is described below. This unit consists of red platy to blocky clay shales and mudstone. The mudstones are hard and appear blocky. The red clay shale of the Hennessey Unit is characterized by numerous bands of streaks of white or light green color ranging from a few inches to four feet in thickness. The total thickness of the unit is about 400 feet. The Hennessey Unit outcrops in a 5 to 15 mile north-south band across Grant, Garfield, Kingfisher, Logan, Canadian, and Oklahoma Counties in Division Four. Topographically, the unit is near level to gently rolling and is generally grass covered or cultivated.

NOTE ☒ Denotes Split Spoon Test
◪ Denotes Texas Cone Penetrator Test
* Classification estimated from disturbed samples. Core sample and petrographic analysis may reveal other rock types.

Proposed Retaining Wall "A" Oklahoma City, OK
I-35/I-240 Interchange Reconstruction

Design		
Drawn		
Checked		
Approved		
Squad	POE	

FOUNDATION REPORT WALL 'A'
(SHEET 1 OF 4)

State Job No. 09032(17) Sheet No. 94

SEPT. 07, 2016 - 16:05:31
H:\PROJECTS\2789_CrossRoads_InterX_New\PHASE IA\Bridge\CADDrawings\1A RetWalls\PHASE1A-RETWALL BORES A-1 & A-2.DWG

REVISIONS	
DESCRIPTION	DATE

Boring Number A-3
Station: 61+50
Offset: 100 Ft. Lt.

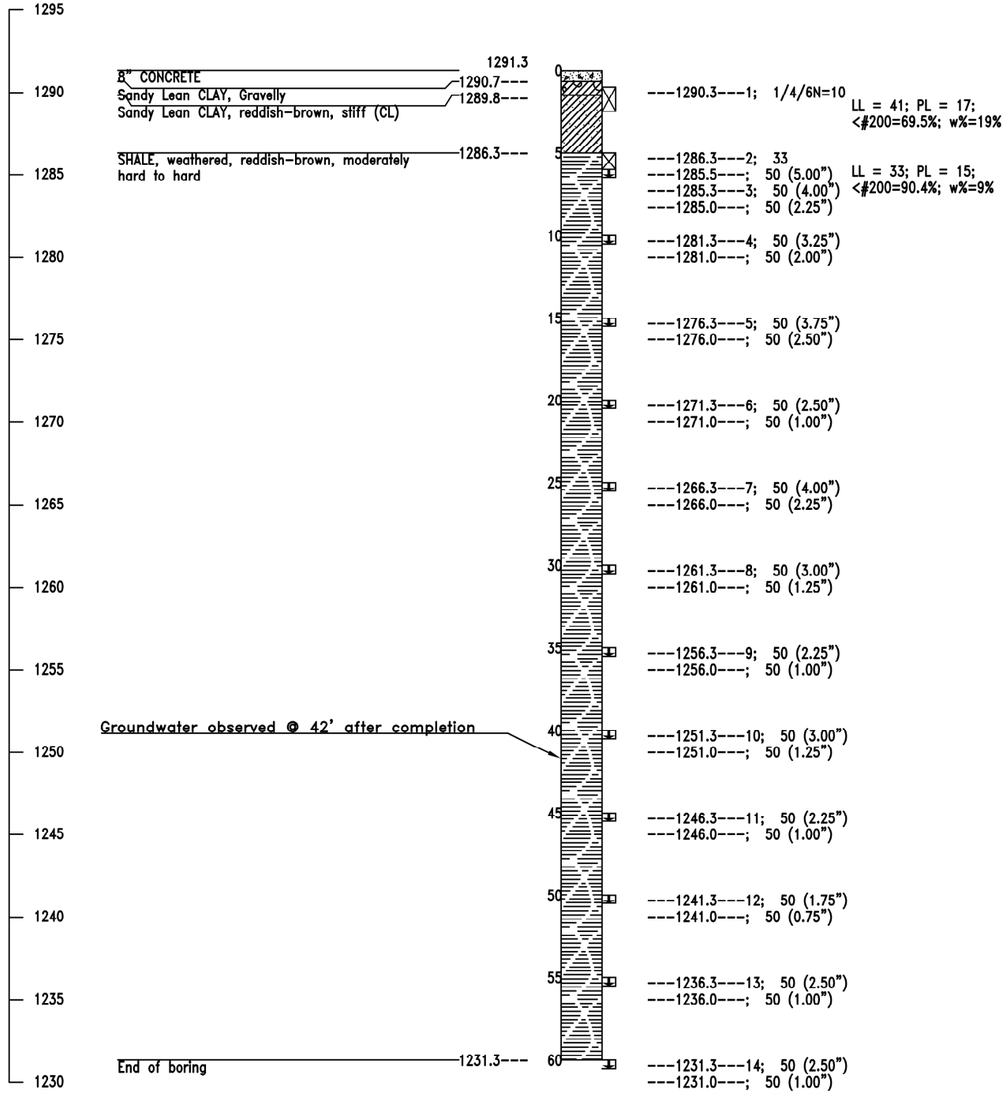

Boring Number A-4
Station: 63+50
Offset: 85 Ft. Lt.

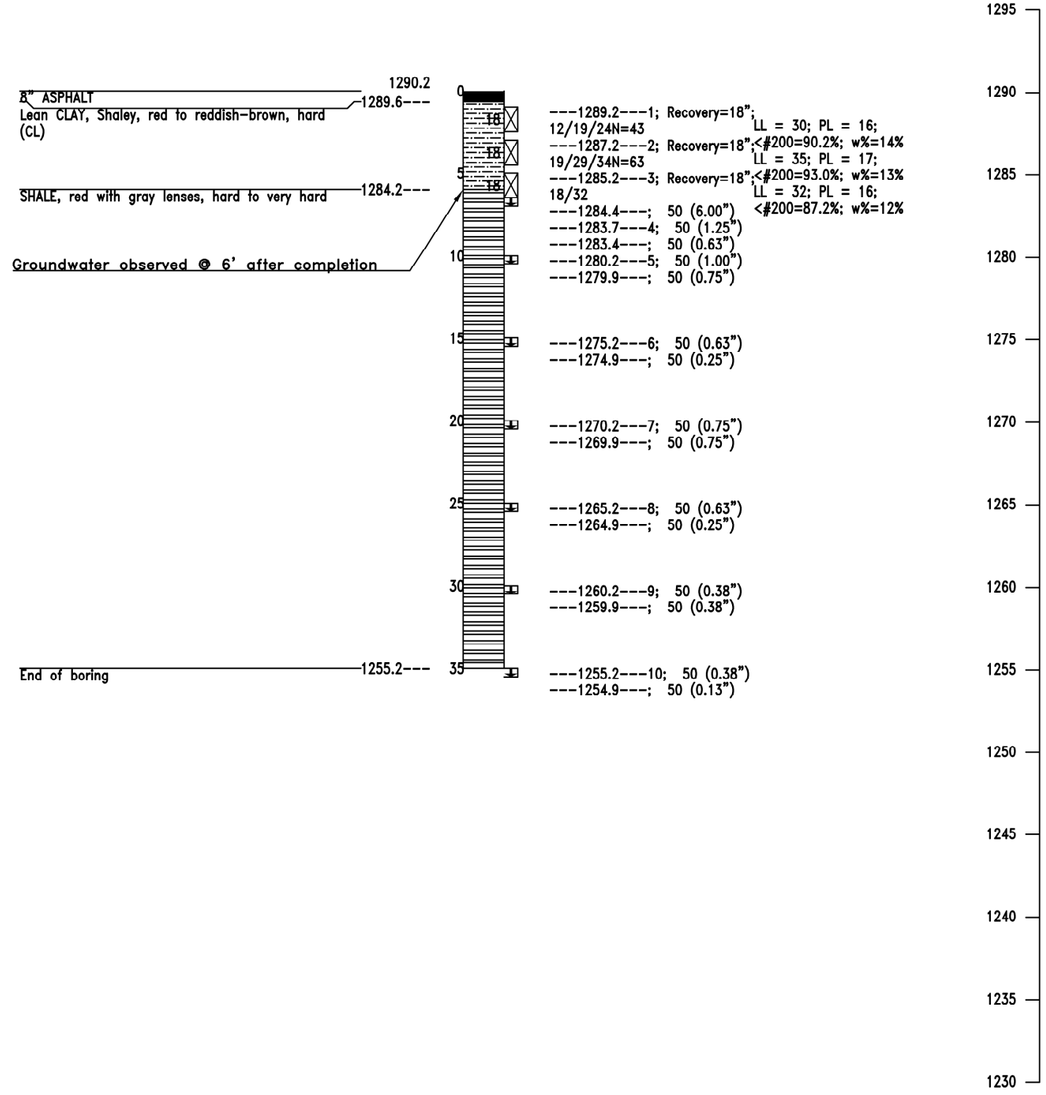

GEOLOGIC STATEMENT

"Division Four" of the "Engineering Classification of Geological Materials", published by the Oklahoma Department of Transportation (ODOT) indicates that below alluvium, the site is underlain by the Hennessey Unit (Phy) in Oklahoma County. The geologic unit is described below. This unit consists of red platy to blocky clay shales and mudstone. The mudstones are hard and appear blocky. The red clay shale of the Hennessey Unit is characterized by numerous bands of streaks of white or light green color ranging from a few inches to four feet in thickness. The total thickness of the unit is about 400 feet. The Hennessey Unit outcrops in a 5 to 15 mile north-south band across Grant, Garfield, Kingfisher, Logan, Canadian, and Oklahoma Counties in Division Four. Topographically, the unit is near level to gently rolling and is generally grass covered or cultivated.

NOTE ☒ Denotes Split Spoon Test
⊞ Denotes Texas Cone Penetrator Test
* Classification estimated from disturbed samples. Core sample and petrographic analysis may reveal other rock types.

Proposed Retaining Wall "A" Oklahoma City, OK
I-35/I-240 Interchange Reconstruction

Design		
Drawn		
Checked		
Approved		
Squad	POE	

FOUNDATION REPORT WALL 'A'
(SHEET 2 OF 4)

State Job No. 09032(17) Sheet No. 95

SEPT 07, 2016 - 18:10:51
H:\PROJECTS\2789_CrossRoads_InterX_New\PHASE IA\Bridge\CADDrawings\1A RetWalls\PHASE1A-RETWALL BORES A-3 & A-4.DWG

REVISIONS	
DESCRIPTION	DATE

Boring Number A-5
Station: 65+50
Offset: 85 Ft. Lt.

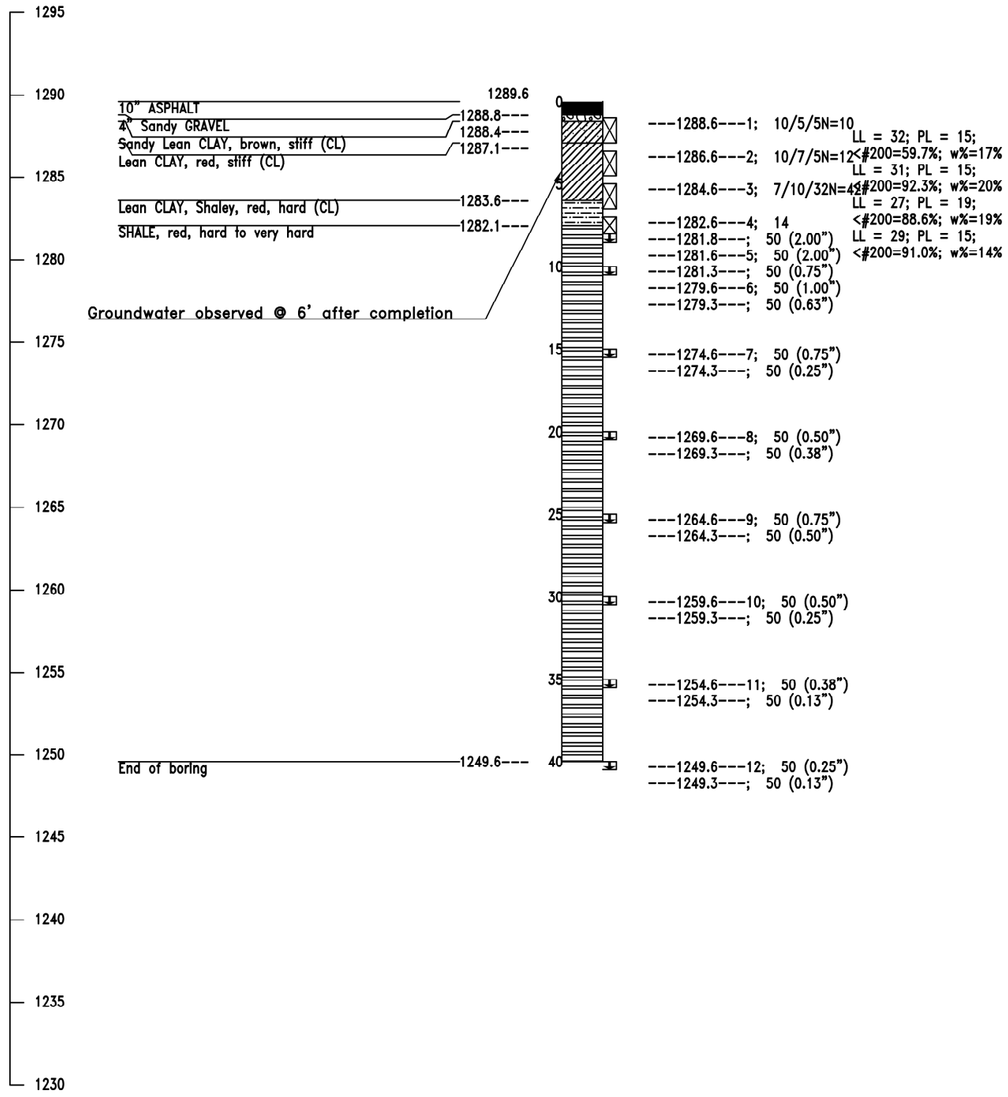

---1288.6---1; 10/5/5N=10 LL = 32; PL = 15;
---1286.6---2; 10/7/5N=12 <#200=59.7%; w%=17%
LL = 31; PL = 15;
---1284.6---3; 7/10/32N=42 <#200=92.3%; w%=20%
LL = 27; PL = 19;
---1282.6---4; 14 <#200=88.6%; w%=19%
---1281.8---; 50 (2.00") LL = 29; PL = 15;
---1281.6---5; 50 (2.00") <#200=91.0%; w%=14%
---1281.3---; 50 (0.75")
---1279.6---6; 50 (1.00")
---1279.3---; 50 (0.63")

---1274.6---7; 50 (0.75")
---1274.3---; 50 (0.25")

---1269.6---8; 50 (0.50")
---1269.3---; 50 (0.38")

---1264.6---9; 50 (0.75")
---1264.3---; 50 (0.50")

---1259.6---10; 50 (0.50")
---1259.3---; 50 (0.25")

---1254.6---11; 50 (0.38")
---1254.3---; 50 (0.13")

---1249.6---12; 50 (0.25")
---1249.3---; 50 (0.13")

Boring Number A-6
Station: 67+50
Offset: 90 Ft. Lt.

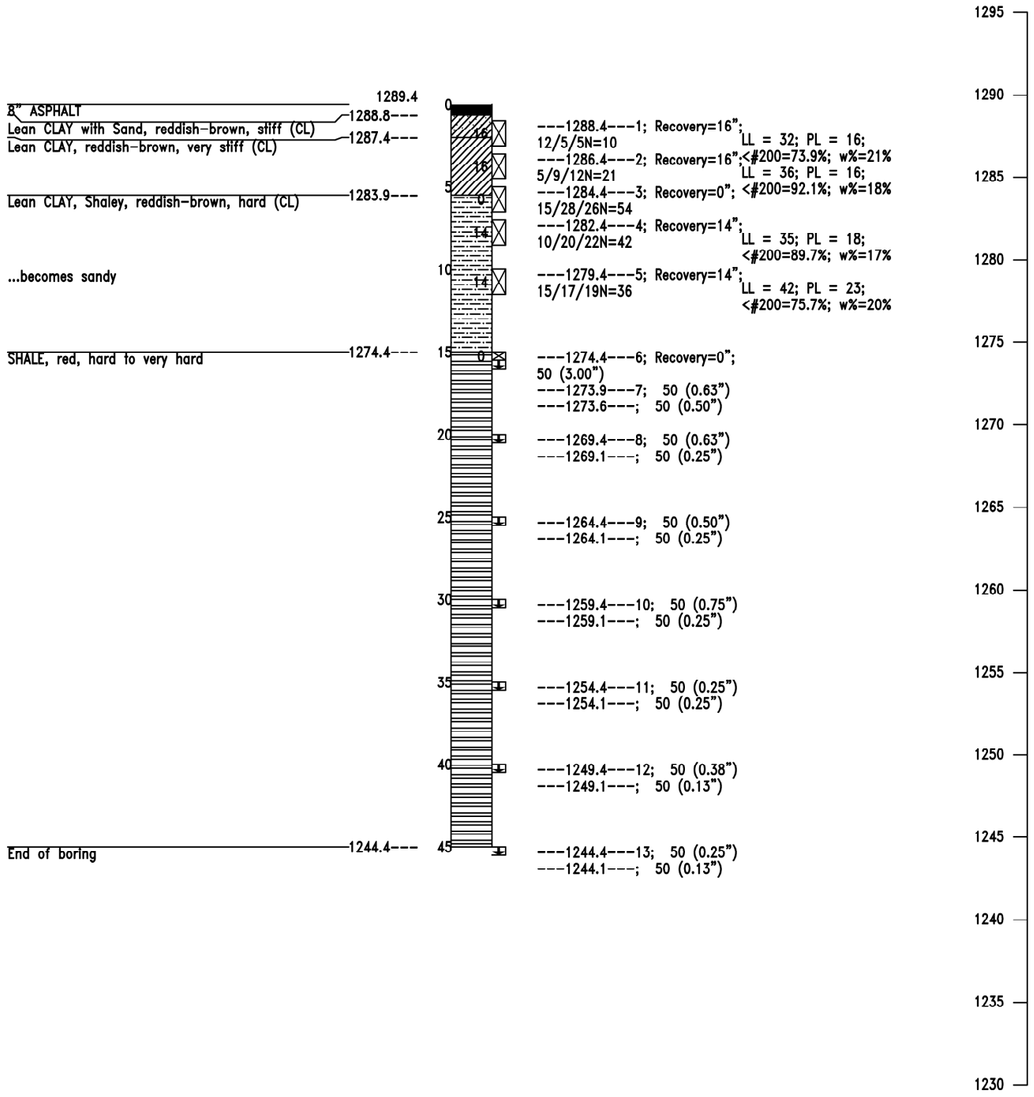

---1288.4---1; Recovery=16";
12/5/5N=10 LL = 32; PL = 16;
---1286.4---2; Recovery=16"; <#200=73.9%; w%=21%
5/9/12N=21 LL = 36; PL = 16;
---1284.4---3; Recovery=0"; <#200=92.1%; w%=18%
15/28/26N=54
---1282.4---4; Recovery=14";
10/20/22N=42 LL = 35; PL = 18;
<#200=89.7%; w%=17%

---1279.4---5; Recovery=14";
15/17/19N=36 LL = 42; PL = 23;
<#200=75.7%; w%=20%

---1274.4---6; Recovery=0";
50 (3.00")
---1273.9---7; 50 (0.63")
---1273.6---; 50 (0.50")

---1269.4---8; 50 (0.63")
---1269.1---; 50 (0.25")

---1264.4---9; 50 (0.50")
---1264.1---; 50 (0.25")

---1259.4---10; 50 (0.75")
---1259.1---; 50 (0.25")

---1254.4---11; 50 (0.25")
---1254.1---; 50 (0.25")

---1249.4---12; 50 (0.38")
---1249.1---; 50 (0.13")

---1244.4---13; 50 (0.25")
---1244.1---; 50 (0.13")

GEOLOGIC STATEMENT

"Division Four" of the "Engineering Classification of Geological Materials", published by the Oklahoma Department of Transportation (ODOT) indicates that below alluvium, the site is underlain by the Hennessey Unit (Phy) in Oklahoma County. The geologic unit is described below. This unit consists of red platy to blocky clay shales and mudstone. The mudstones are hard and appear blocky. The red clay shale of the Hennessey Unit is characterized by numerous bands of streaks of white or light green color ranging from a few inches to four feet in thickness. The total thickness of the unit is about 400 feet. The Hennessey Unit outcrops in a 5 to 15 mile north-south band across Grant, Garfield, Kingfisher, Logan, Canadian, and Oklahoma Counties in Division Four. Topographically, the unit is near level to gently rolling and is generally grass covered or cultivated.

NOTE ☒ Denotes Split Spoon Test
⊡ Denotes Texas Cone Penetrator Test
* Classification estimated from disturbed samples. Core sample and petrographic analysis may reveal other rock types.

Proposed Retaining Wall "A" Oklahoma City, OK
I-35/I-240 Interchange Reconstruction

Design		
Drawn		
Checked		
Approved		
Squad	POE	

FOUNDATION REPORT WALL 'A'
(SHEET 3 OF 4)

State Job No. 09032(17) Sheet No. 96

SEPT 07, 2016 - 18:22:21
H:\PROJECTS\2789_CrossRoads_InterX_New\PHASE IA\Bridge\CADDrawings\1A RetWalls\PHASE1A-RETWALL BORES A-5 & A-6.DWG

REVISIONS	
DESCRIPTION	DATE

Boring Number A-7
Station: 69+50
Offset: 125 Ft. Lt.

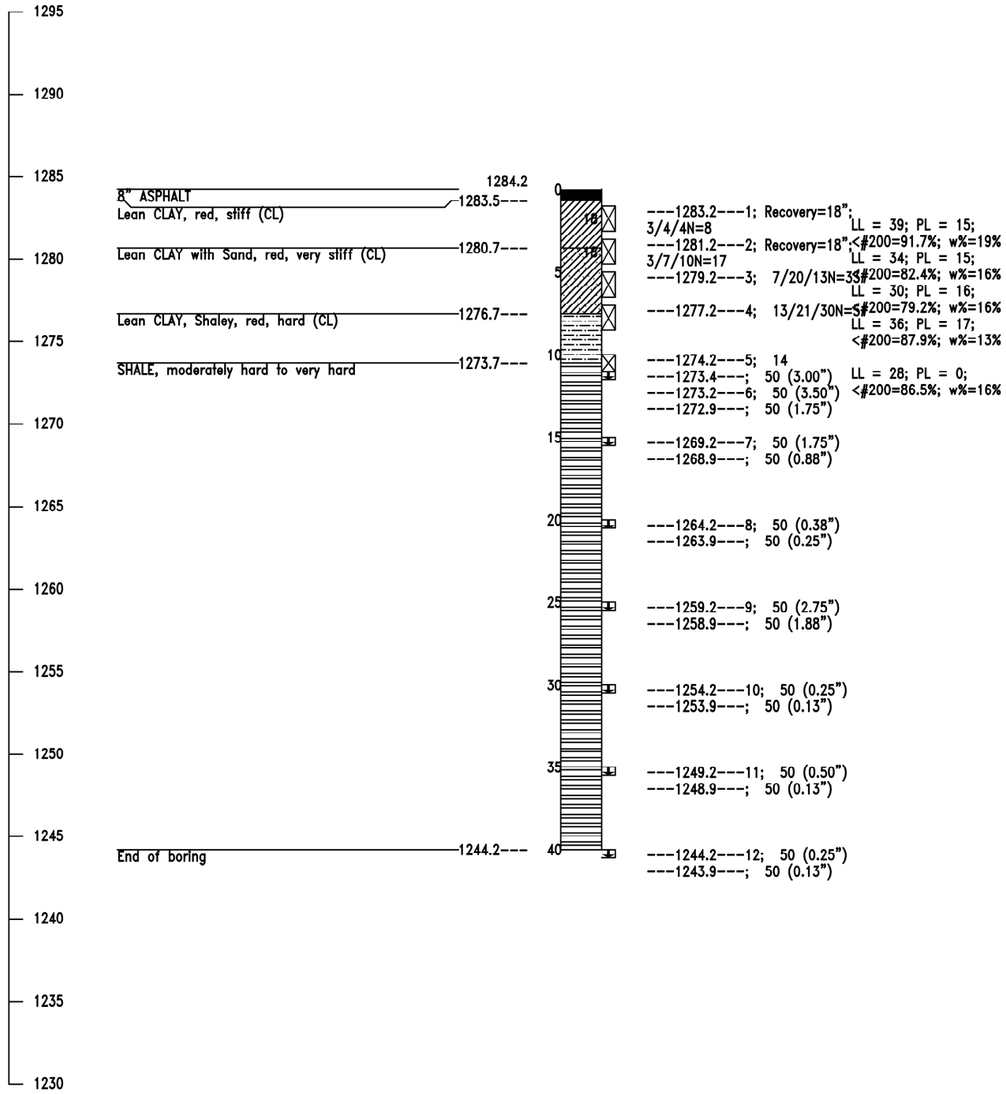

GEOLOGIC STATEMENT

"Division Four" of the "Engineering Classification of Geological Materials", published by the Oklahoma Department of Transportation (ODOT) indicates that below alluvium, the site is underlain by the Hennessey Unit (Phy) in Oklahoma County. The geologic unit is described below. This unit consists of red platy to blocky clay shales and mudstone. The mudstones are hard and appear blocky. The red clay shale of the Hennessey Unit is characterized by numerous bands of streaks of white or light green color ranging from a few inches to four feet in thickness. The total thickness of the unit is about 400 feet. The Hennessey Unit outcrops in a 5 to 15 mile north-south band across Grant, Garfield, Kingfisher, Logan, Canadian, and Oklahoma Counties in Division Four. Topographically, the unit is near level to gently rolling and is generally grass covered or cultivated.

NOTE ☒ Denotes Split Spoon Test
⊞ Denotes Texas Cone Penetrator Test
* Classification estimated from disturbed samples. Core sample and petrographic analysis may reveal other rock types.

Proposed Retaining Wall "A" Oklahoma City, OK
I-35/I-240 Interchange Reconstruction

Design		
Drawn		
Checked		
Approved		
Squad	POE	

FOUNDATION REPORT WALL 'A'
(SHEET 4 OF 4)

State Job No. 09032(17) Sheet No. 97

SEPT 07, 2016 - 18:25:06
H:\PROJECTS\2789_CrossRoads_InterX_New\PHASE IA\Bridge\CADDrawings\1A RetWalls\PHASE1A-RETWALL BORES A-7.DWG

REVISIONS	
DESCRIPTION	DATE

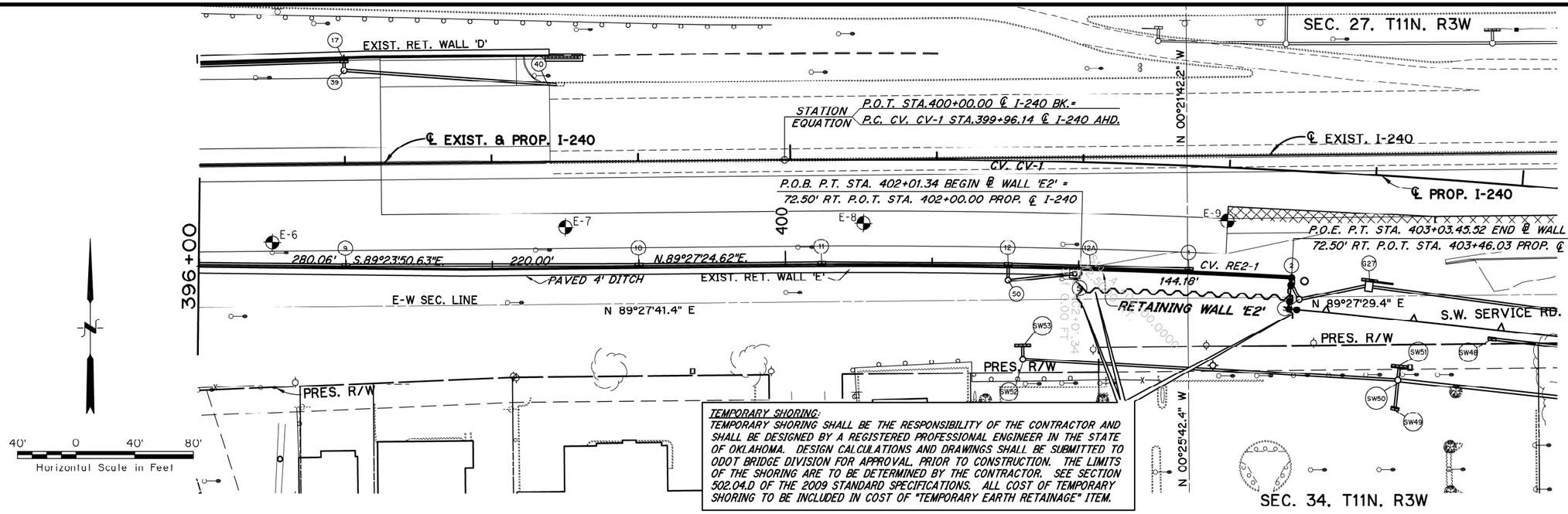

TEMPORARY SHORING:
TEMPORARY SHORING SHALL BE THE RESPONSIBILITY OF THE CONTRACTOR AND SHALL BE DESIGNED BY A REGISTERED PROFESSIONAL ENGINEER IN THE STATE OF OKLAHOMA. DESIGN CALCULATIONS AND DRAWINGS SHALL BE SUBMITTED TO ODOT BRIDGE DIVISION FOR APPROVAL, PRIOR TO CONSTRUCTION. THE LIMITS OF THE SHORING ARE TO BE DETERMINED BY THE CONTRACTOR. SEE SECTION 502.04.D OF THE 2009 STANDARD SPECIFICATIONS. ALL COST OF TEMPORARY SHORING TO BE INCLUDED IN COST OF "TEMPORARY EARTH RETAINAGE" ITEM.

CURVE RE2-1
P.I. STA. 402+73.43
N. 142990.61
E. 2148281.95
Δ = 02°27'37.08"RT.
D = 01°00'46.18"
L = 144.18'
T = 72.09'
R = 5657.08'
E = 0.46'

CAUTION:
GAS LINES TO BE RELOCATED PRIOR TO CONSTRUCTION.

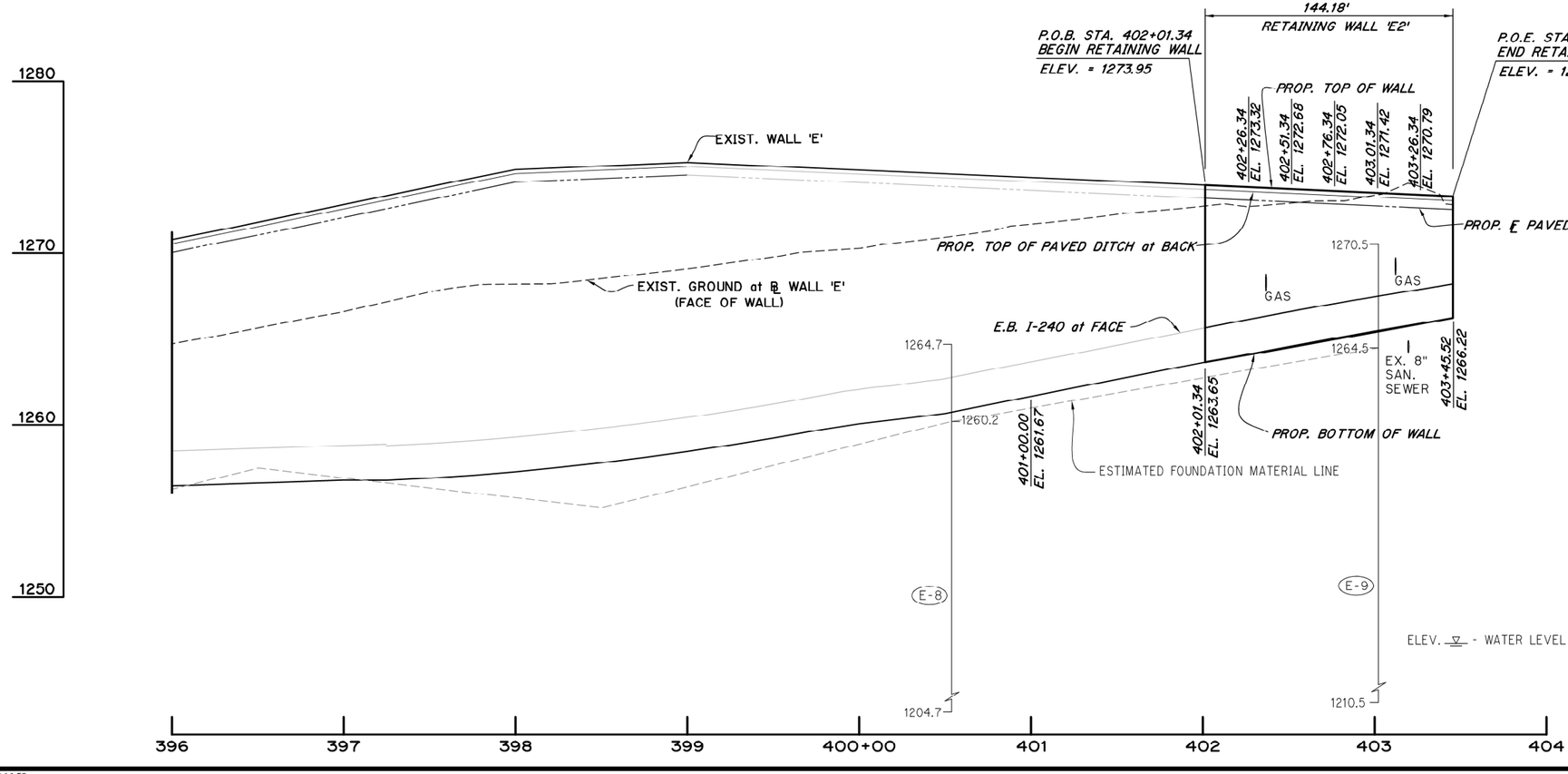

NOTE:
TR4 RAIL NOT SHOWN FOR CLARITY.

NOTE:
ARCHITECTURAL FORMLINER AND DETAILS WILL BE PROVIDED AT A LATER DATE BY ODOT. FORMLINER SHALL BE A CONTINUATION OF WALL 'E' AND SHALL MATCH.

ELEV. ▽ - WATER LEVEL AFTER COMPLETION

OKLAHOMA COUNTY

Design		
Drawn		
Checked		
Approved		
Squad	POE	

M.S.E. RETAINING WALL 'E2' PLAN & ELEVATION

State Job No. 09032(17) Sheet No. 98

SEPT 07, 2016 - 18:14:52
H:\PROJECTS\2789_CrossRoads_InterX_New\PHASE IA\Bridge\CADDrawings\1A RetWalls\PHASE-1A-PNP RETWALL E2.DWG

REVISIONS	
DESCRIPTION	DATE

Boring Number E-8
Station: 400+50
Offset: 43.5 Ft. Rt. CL I-240

1264.7
4½" ASPHALT — 1264.3---
6¾" AGGREGATE BASE — 1263.8---
Lean CLAY, Shaley, reddish-brown, hard (CL)
SILTSTONE, Sandy, interbedded with gray shale, hard to very hard — 1260.2---

---1261.7---1; Recovery=18"; LL = 33; PL = 15; w%=11%
16/44/46N=90
---1259.7---2; Recovery=4"; <#200=61.1%; w%=9%
50 (4.00")
---1257.7---3; 50 (1.75")
---1257.4---; 50 (0.75")
---1254.7---4; 50 (0.50")
---1254.4---; 50 (0.25")
---1249.7---5; 50 (1.75")
---1249.4---; 50 (1.00")
---1244.7---6; 50 (2.63")
---1244.4---; 50 (1.25")
---1239.7---7; 50 (2.00")
---1239.4---; 50 (1.00")
---1234.7---8; 50 (0.13")
---1234.4---; 50 (0.25")
---1229.7---9; 50 (0.75")
---1229.4---; 50 (0.25")
---1224.7---10; 50 (1.50")
---1224.4---; 50 (0.75")
---1219.7---11; 50 (2.00")
---1219.4---; 50 (1.25")
---1214.7---12; 50 (0.50")
---1214.4---; 50 (0.25")
---1209.7---13; 50 (0.38")
---1209.4---; 50 (0.25")
---1204.7---14; 50 (1.25")
---1204.4---; 50 (0.75")

End of boring — 1204.7---

Boring Number E-9
Station: 403+00
Offset: 36.5 Ft. Rt. CL I-240

1270.5
4" ASPHALT — 1270.2---
7" AGGREGATE BASE — 1269.6---
Lean CLAY, Shaley, reddish-brown, hard (CL)
SILTSTONE, Shaley, interbedded with gray shale, reddish-brown, hard to very hard — 1264.5---

---1267.5---1; Recovery=18"; LL = 33; PL = 15;
8/16/27N=43
---1265.5---2; Recovery=16"; <#200=85.9%; w%=12%
24/35 LL = 32; PL = 16;
---1264.7---; 50 (3.50") <#200=93.9%; w%=12%
---1263.5---3; 50 (2.00")
---1263.2---; 50 (1.13")
---1260.5---4; 50 (0.50")
---1260.2---; 50 (0.13")
---1255.5---5; 50 (2.25")
---1255.2---; 50 (1.50")
---1250.5---6; 50 (3.13")
---1250.2---; 50 (2.00")
---1245.5---7; 50 (0.75")
---1245.2---; 50 (0.25")
---1240.5---8; 50 (1.13")
---1240.2---; 50 (0.63")
---1235.5---9; 50 (1.25")
---1235.2---; 50 (0.75")
---1230.5---10; 50 (2.88")
---1230.2---; 50 (1.13")
---1225.5---11; 50 (1.00")
---1225.2---; 50 (0.25")
---1220.5---12; 50 (1.50")
---1220.2---; 50 (1.00")
---1215.5---13; 50 (0.75")
---1215.2---; 50 (0.25")
---1210.5---14; 50 (1.00")
---1210.2---; 50 (0.38")

End of boring — 1210.5---

GEOLOGIC STATEMENT

"Division Four" of the "Engineering Classification of Geological Materials", published by the Oklahoma Department of Transportation (ODOT) indicates that below alluvium, the site is underlain by the Hennessey Unit (Phy) in Oklahoma County. The geologic unit is described below. This unit consists of red platy to blocky clay shales and mudstone. The mudstones are hard and appear blocky. The red clay shale of the Hennessey Unit is characterized by numerous bands of streaks of white or light green color ranging from a few inches to four feet in thickness. The total thickness of the unit is about 400 feet. The Hennessey Unit outcrops in a 5 to 15 mile north-south band across Grant, Garfield, Kingfisher, Logan, Canadian, and Oklahoma Counties in Division Four. Topographically, the unit is near level to gently rolling and is generally grass covered or cultivated.

NOTE ☒ Denotes Split Spoon Test
⊞ Denotes Texas Cone Penetrator Test
* Classification estimated from disturbed samples. Core sample and petrographic analysis may reveal other rock types.

Proposed Retaining Wall "E2" Oklahoma City, OK
I-35/I-240 Interchange Reconstruction

Design		
Drawn		
Checked		
Approved		
Squad	POE	

FOUNDATION REPORT WALL 'E2'
(SHEET 1 OF 1)

State Job No. 09032(17) Sheet No. 99

SEPT 07, 2016 - 18:30:08
H:\PROJECTS\2789_CrossRoads_InterX_New\PHASE IA\Bridge\CADDrawings\1A RetWalls\PHASE1A-RETWALL BORES E-8 E-9.DWG

REVISIONS	
DESCRIPTION	DATE

* COPING AND TRAFFIC RAIL CONNECTION TO COPING TO BE DESIGNED BY MANUFACTURER.

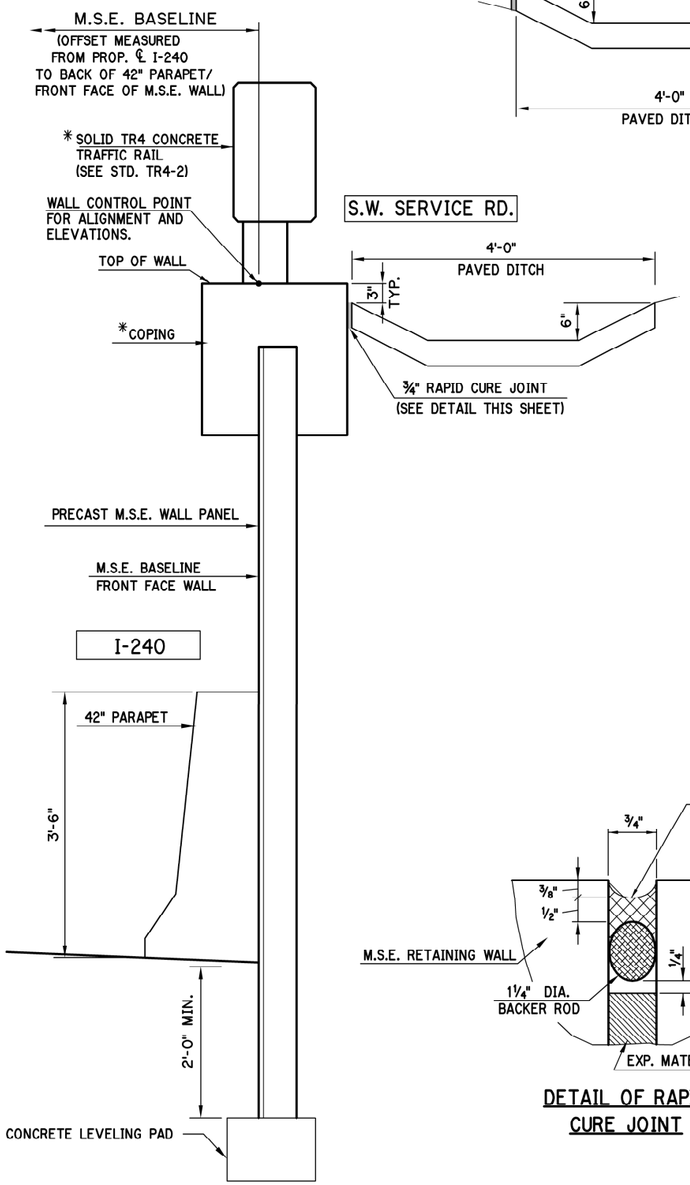

WALL 'E2'

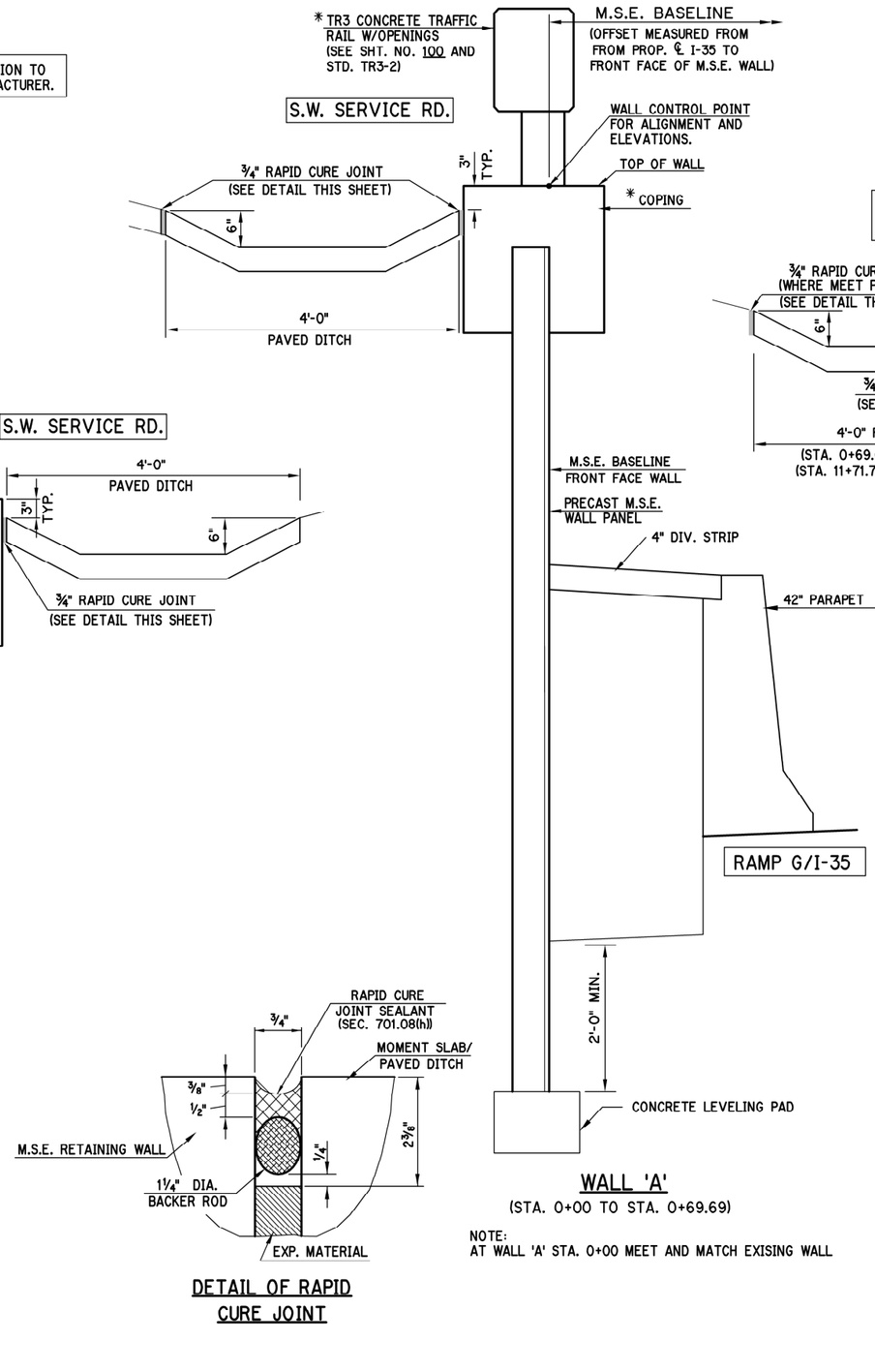

WALL 'A'

(STA. 0+00 TO STA. 0+69.69)

NOTE:
AT WALL 'A' STA. 0+00 MEET AND MATCH EXISING WALL

DETAIL OF RAPID CURE JOINT

NOTE:
CONC. RAIL HEIGHT TRANSITIONS FROM 2-5" TO 6" AT WALL 'A' STA. 3+25 TO STA. 3+50. AND WALL 'A' STA. 12+88.67 TO STA. 13+13.67 SEE SHEET NO. 101A FOR DETAILS.

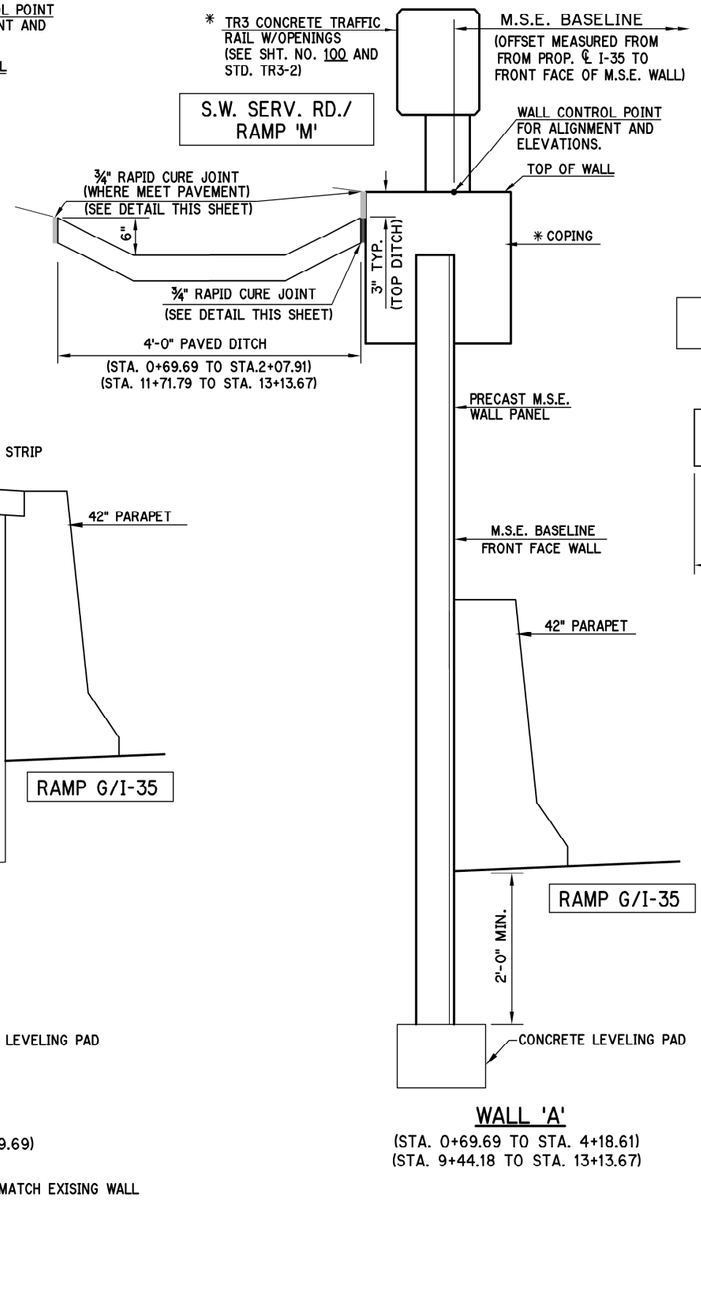

WALL 'A'

(STA. 0+69.69 TO STA. 4+18.61)
(STA. 9+44.18 TO STA. 13+13.67)

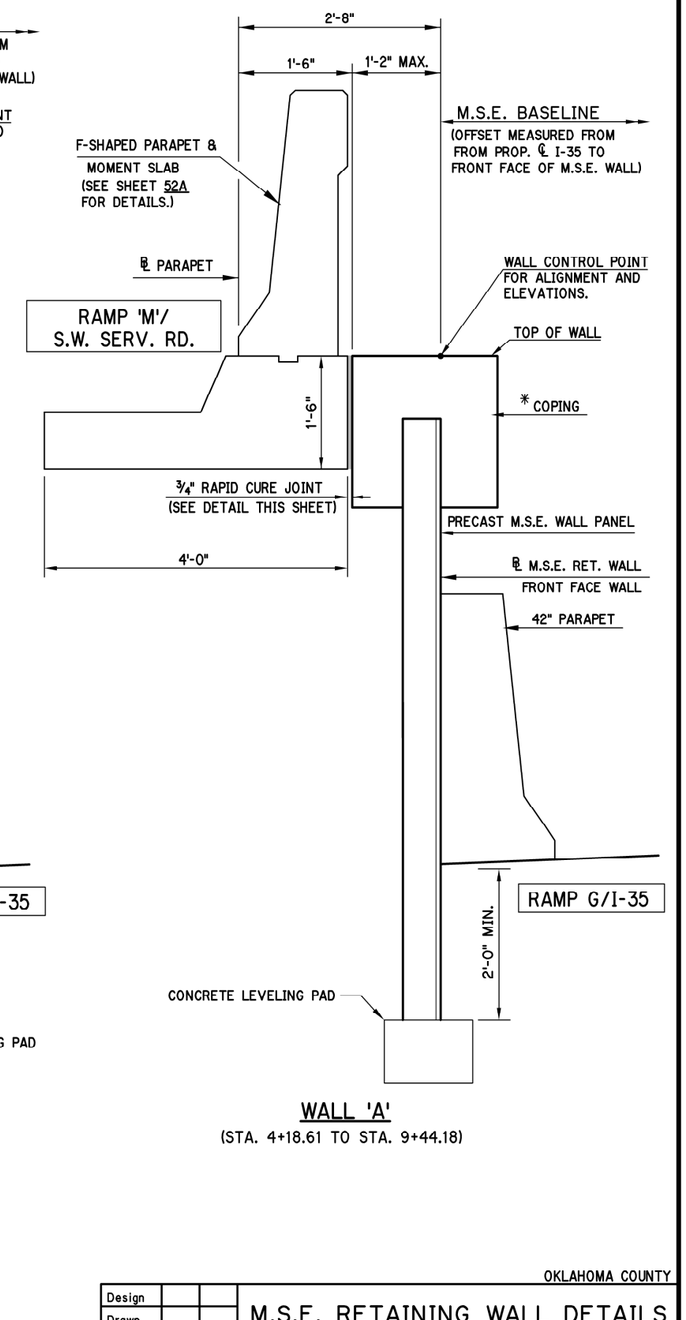

WALL 'A'

(STA. 4+18.61 TO STA. 9+44.18)

OKLAHOMA COUNTY

Design		
Drawn		
Checked		
Approved		
Squad	POE	

M.S.E. RETAINING WALL DETAILS

(SHEET 1 OF 2)

State Job No. 09032(17) Sheet No. 100

SEPT 07, 2016 - 18:40:19
M:\PROJECTS\2789_CrossRoads_InterX_New\PHASE 1A\Bridge\CADDrawings\1A RetWalls\PHASE1A-RETWALL-MSE-DETAILS.DWG

REVISIONS	
DESCRIPTION	DATE

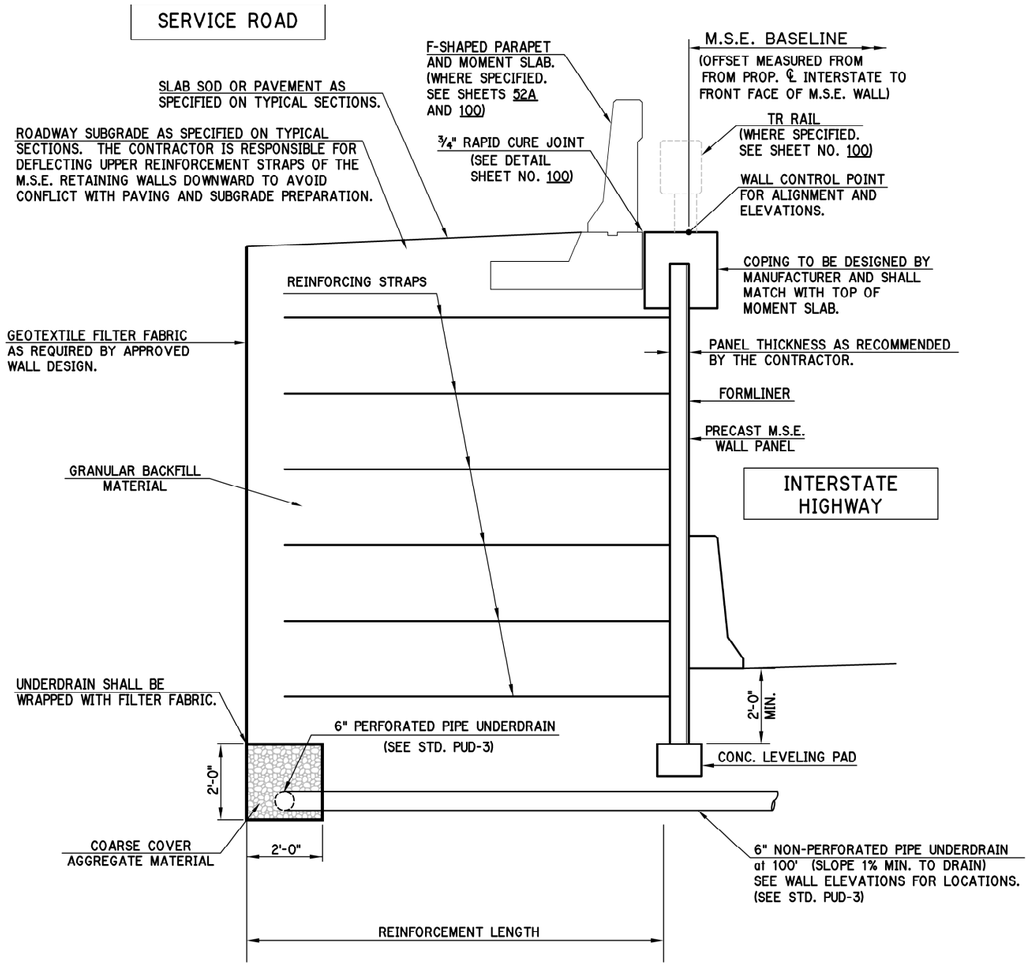

M.S.E. WALL SECTION DETAIL

(PORTION OF WALL 'A' SHOWN, SEE SHEET NO. 100 FOR ADDITIONAL CONDITIONS AND DETAILS)

NOTE:

THE M.S.E. WALL PANELS SHALL BE STACKED AND MAY BE ERECTED IN A STAGGERED HORIZONTAL JOINT PATTERN.

ALL COST FOR WALL DRAINAGE SHALL BE INCLUDED IN PER SQUARE YARD FOR "MSE RETAINING WALL".

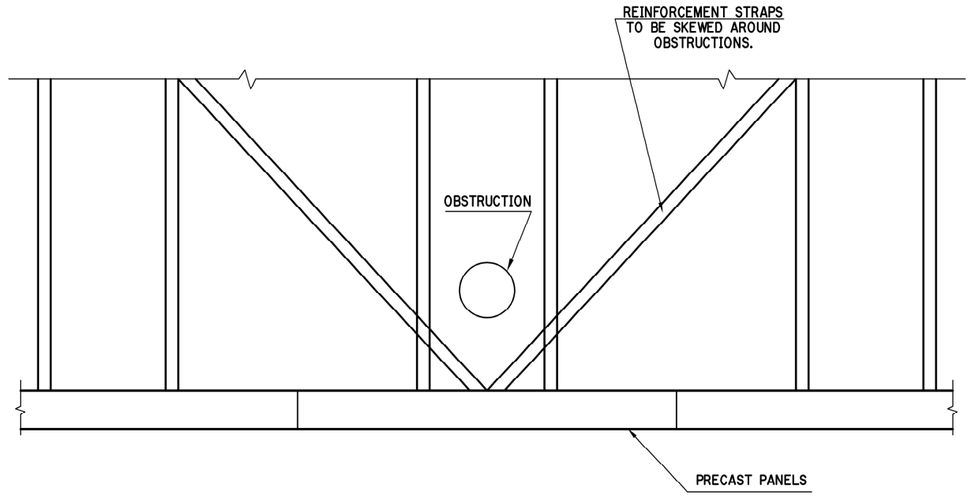

STRAP SKEWING PLAN DETAIL AT OBSTRUCTIONS

NOTE:

IF BARMAT OR WIRE MESH SOIL REINFORCEMENT IS USED, THEN A STRUCTURAL YOKE SYSTEM MUST BE ATTACHED TO THE OBSTRUCTED PANEL(S) AND THE OBSTRUCTED SECTIONS OF SOIL REINFORCEMENTS MUST BE ATTACHED TO THE YOKE ON THE BACKSIDE OF THE OBSTRUCTION.

OKLAHOMA COUNTY

Design		
Drawn		
Checked		
Approved		
Squad	POE	

M.S.E. RETAINING WALL DETAILS

(SHEET 2 OF 2)

State Job No. 09032(17) Sheet No. 101

SEPT 07, 2016 - 18:40:19
H:\PROJECTS\2789_CrossRoads_InterX_New\PHASE 1A\Bridge\CADDrawings\1A RetWalls\PHASE1A-RETWALL-MSE-DETAILS.DWG

REVISIONS	
DESCRIPTION	DATE

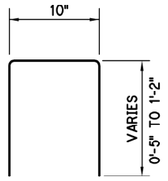

SR2 #4 x 2'-5" AVG.
(1'-8" TO 3'-2")
(USED IN PAIRS)
20 REQ'D.

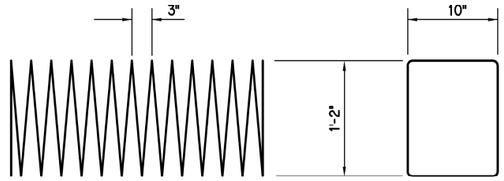

S BAR W3.5 SPIRAL

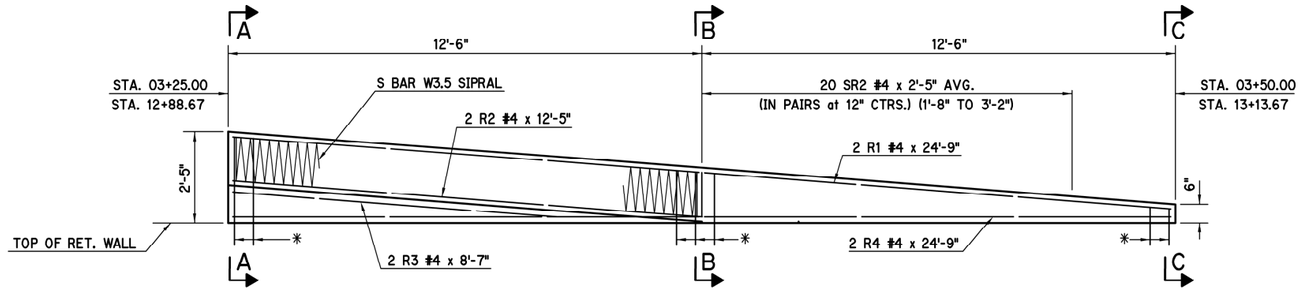

BARRIER TRANSITION ELEVATION

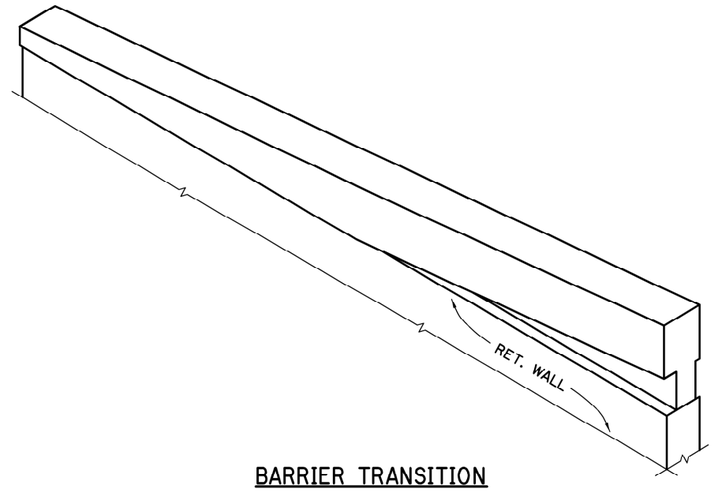

BARRIER TRANSITION PICTORIAL

* COPING AND TRAFFIC RAIL CONNECTION TO COPING TO BE DESIGNED BY M.S.E. MANUFACTURER.

NOTE: ALL COST OF TRANSITION TO BE INCLUDED PRICE BID PER L.F. OF CONCRETE RAIL (TR3).

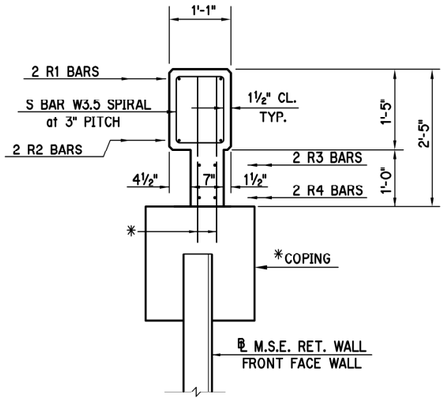

SECTION A-A

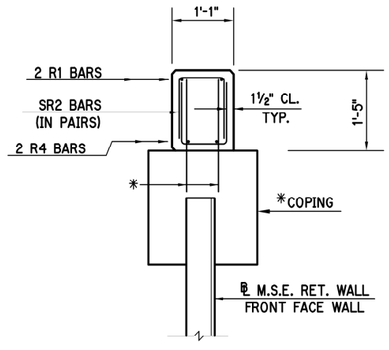

SECTION B-B

NOTE:
ALL EXPOSED TRAFFIC RAIL EDGES
SHALL HAVE A ¾" CHAMFER.

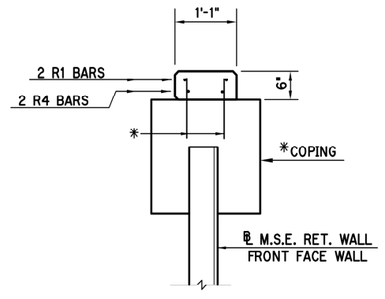

SECTION C-C

OKLAHOMA COUNTY

Design		
Drawn		
Checked		
Approved		
Squad	POE	

CONCRETE TRAFFIC RAIL TRANSITION DETAILS
WALL 'A'

State Job No. 09032(17) Sheet No. 101A

SEPT 07, 2016 - 18:52:12
M:\PROJECTS\2789_CrossRoads_InterX_New\PHASE 1A\Bridge\CADDrawings\1A RetWalls\PHASE1A-TR3TRANISTION.DWG

REVISIONS		
	DESCRIPTION	DATE
1	ADDED DRIVE	09/23/16

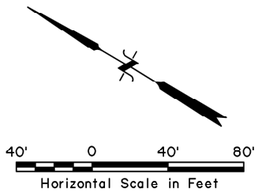

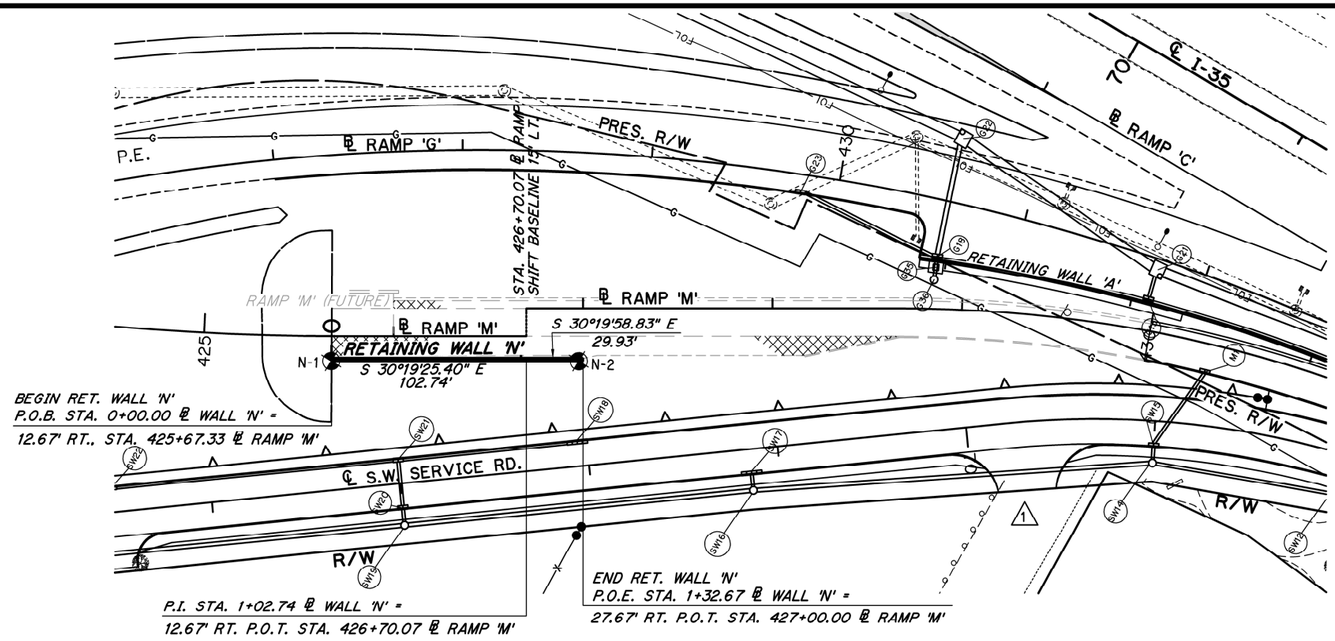

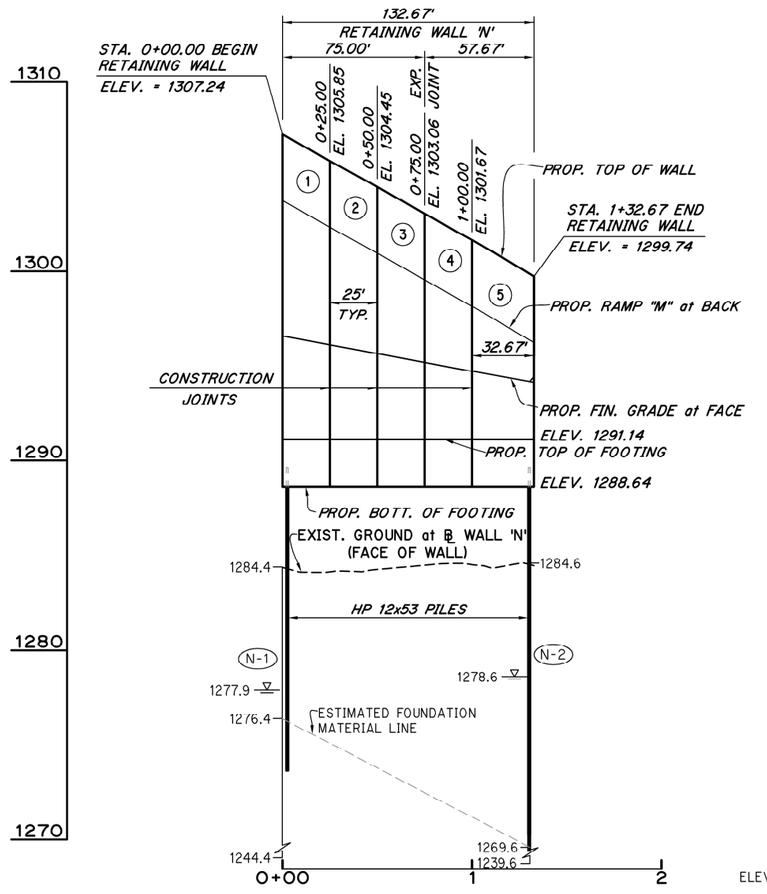

NOTE:
ARCHITECTURAL FORMLINER AND DETAILS WILL BE PROVIDED AT A LATER DATE BY ODOT.

ELEV. ▽ - WATER LEVEL AFTER COMPLETION

OKLAHOMA COUNTY

Design		
Drawn		
Checked		
Approved		
Squad	POE	

C.I.P. RETAINING WALL 'N' PLAN & ELEVATION

State Job No. 09032(17) Sheet No. 102

SEPT 26, 2016 - 08:25:46
H:\PROJECTS\2789_CrossRoads_InterX_New\PHASE IA\Bridge\CADDrawings\1A RetWalls\PHASE1A-PNP RETWALL N.DWG

REVISIONS	
DESCRIPTION	DATE

Boring Number N-1
Station: 73+30
Offset: 68 Ft. Lt. SW Service Road

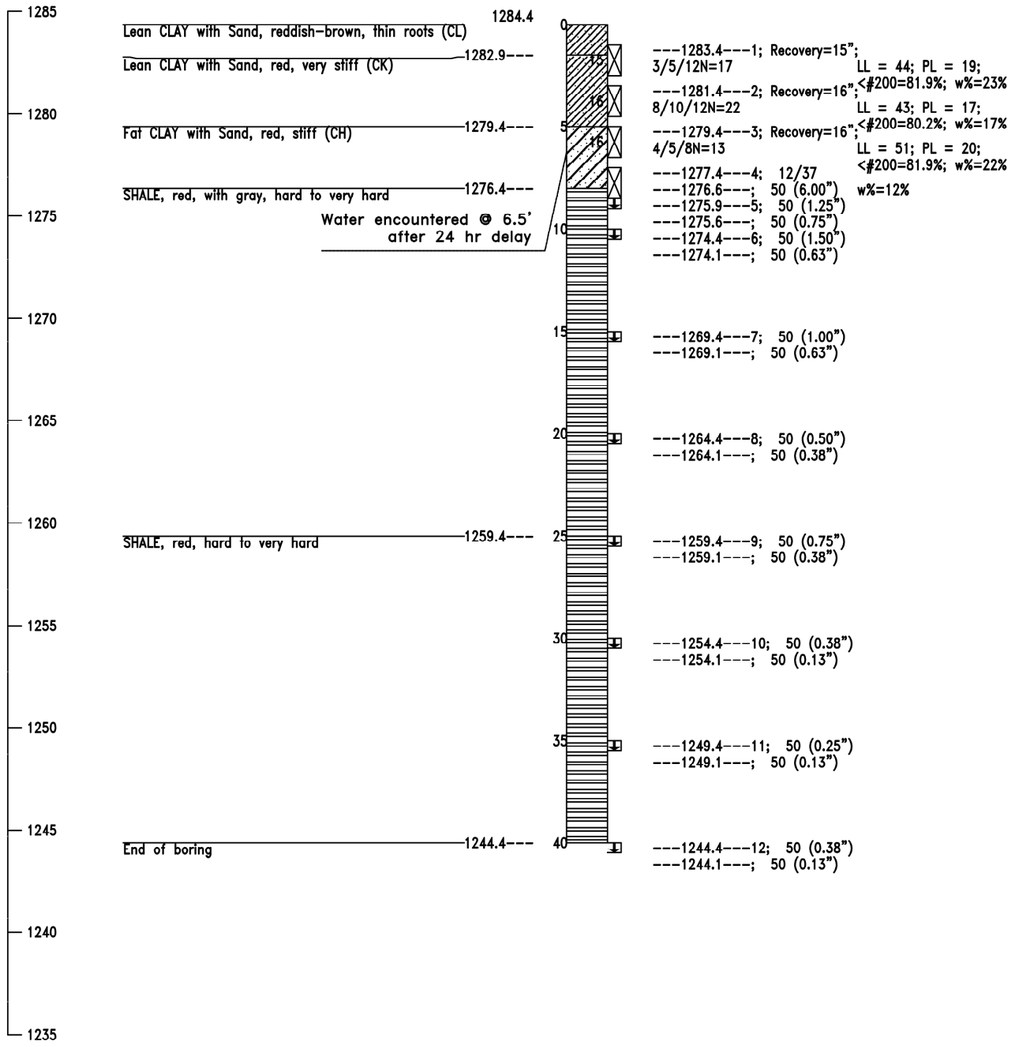

Boring Number N-2
Station: 72+00
Offset: 55 Ft. Lt. SW Service Road

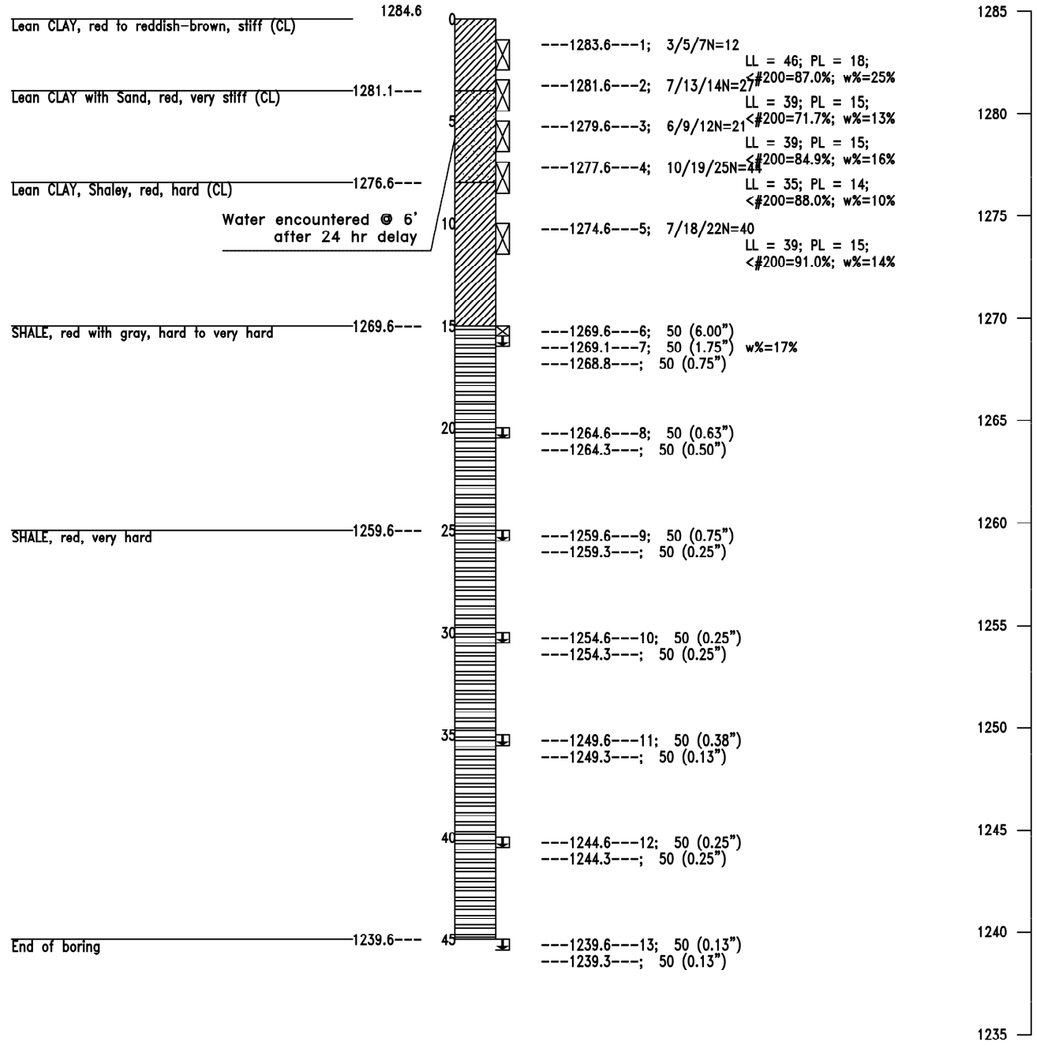

GEOLOGIC STATEMENT

"Division Four" of the "Engineering Classification of Geological Materials", published by the Oklahoma Department of Transportation (ODOT) indicates that below alluvium, the site is underlain by the Hennessey Unit (Phy) in Oklahoma County. The geologic unit is described below. This unit consists of red platy to blocky clay shales and mudstone. The mudstones are hard and appear blocky. The red clay shale of the Hennessey Unit is characterized by numerous bands of streaks of white or light green color ranging from a few inches to four feet in thickness. The total thickness of the unit is about 400 feet. The Hennessey Unit outcrops in a 5 to 15 mile north-south band across Grant, Garfield, Kingfisher, Logan, Canadian, and Oklahoma Counties in Division Four. Topographically, the unit is near level to gently rolling and is generally grass covered or cultivated.

NOTE ☒ Denotes Split Spoon Test
⊞ Denotes Texas Cone Penetrator Test
* Classification estimated from disturbed samples. Core sample and petrographic analysis may reveal other rock types.

Proposed Retaining Wall "N" Oklahoma City, OK
I-35/I-240 Interchange Reconstruction

Design		
Drawn		
Checked		
Approved		
Squad	POE	

FOUNDATION REPORT WALL 'N'
(SHEET 1 OF 1)

State Job No. 09032(17) Sheet No. 103

SEPT 07, 2016 - 18:56:13
H:\PROJECTS\2789_CrossRoads_InterX_New\PHASE IA\Bridge\CADDrawings\1A RetWalls\PHASE1A-RETWALL BORES N-1 N-2.DWG

REVISIONS	
DESCRIPTION	DATE

RETAINING WALL BAR LIST

PANEL NO.	PANEL LENGTH	L1 #5 BARS at 12" CTRS.		L2 #5 BARS at 12" CTRS.		L3 #5 BARS		VF1 #5 BARS at 12" CTRS. (LAP W/D1 BARS)			VB1 BARS LAP W/D2 BARS (BENT BAR, EXCEPT PANEL 5)								D1 #5 BARS at 12" CTRS.		D2 BARS at 12" CTRS.					F1 BARS				F2 #5 BARS at 12" CTRS.		F3 #4 BARS at 12" CTRS.		F4 BARS at 6" CTRS.		
		NO.	LENGTH	NO.	LENGTH	NO.	LENGTH	NO.	LENGTH	LENGTH VAR.	SIZE	NO.	SPA.	X	Y	Z	LENGTH	LENGTH VAR.	NO.	LENGTH	SIZE	NO.	X	Y	LENGTH	SIZE	NO.	SPA.	LENGTH	NO.	LENGTH	NO.	LENGTH	SIZE	NO.	LENGTH
1	25.00'	30	24'-8"	2	6'-8"	2	24'-8"	26	15'-2½" AVG.	14'-6" TO 15'-11"	#7	26	12"	6'-7"	8'-0"	9'-5"	15'-3½" AVG.	14'-7" TO 16'-0"	26	4'-3"	#7	26	1'-2"	5'-4"	6'-6"	#5	26	12"	8'-2"	26	8'-2"	10	24'-8"	#8	18	24'-8"
2	25.00'	26	24'-8"	2	6'-8"	2	24'-8"	26	13'-9½" AVG.	13'-1" TO 14'-6"	#7	26	12"	6'-7"	6'-7"	8'-0"	13'-10½" AVG.	13'-2" TO 14'-7"	26	4'-3"	#7	26	1'-2"	5'-4"	6'-6"	#5	26	12"	8'-2"	26	8'-2"	10	24'-8"	#8	18	24'-8"
3	25.00'	24	24'-8"	2	6'-8"	2	24'-8"	26	12'-5" AVG.	11'-9" TO 13'-1"	#7	26	12"	4'-1"	7'-9"	9'-1"	12'-6" AVG.	11'-10" TO 13'-2"	26	4'-3"	#7	26	1'-2"	5'-4"	6'-6"	#5	26	12"	7'-5"	26	7'-5"	9	24'-8"	#8	16	24'-8"
4	25.00'	20	24'-8"	2	6'-8"	2	24'-8"	26	11'-0½" AVG.	10'-4" TO 11'-9"	#7	26	12"	4'-1"	6'-4"	7'-9"	11'-1½" AVG.	10'-5" TO 11'-10"	26	4'-3"	#7	26	1'-2"	5'-4"	6'-6"	#5	26	12"	7'-5"	26	7'-5"	9	24'-8"	#8	16	24'-8"
5	32.67'	16	32'-4"	2	15'-5"	2	32'-5"	34	9'-4½" AVG.	8'-5" TO 10'-4"	#8	34	12"	---	---	---	9'-4½" AVG.	8'-5" TO 10'-4"	34	4'-3"	#8	34	1'-4"	6'-3"	7'-7"	#5	34	12"	6'-5"	34	6'-5"	8	32'-4"	#6	14	32'-4"

NOTE: ALL BENT BAR DIMENSIONS ARE OUT TO OUT.

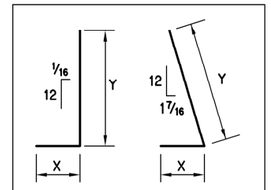

PANEL 5 PANELS 1 THRU 4
D2 BARS

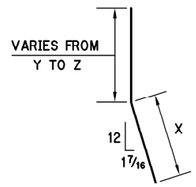

VB1 BARS
(VB1 BARS FOR PANEL 5 ARE STRAIGHT BARS.)

** NOTE: L1 BARS ARE UNIFORM LENGTH BARS IN LOWER PORTION OF WALL. L2 BARS ARE VARIABLE LENGTH BARS TO BE PLACED IN UPPER PORTION OF WALL. L3 BARS ARE TO BE PLACED AT TOP OF WALL (1 EA. FACE) AND SHALL FOLLOW PROFILE OF WALL. SEE DETAIL BELOW.

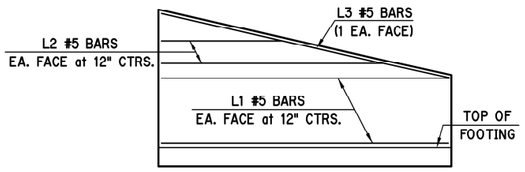

LONGIT. WALL REINF. DETAIL

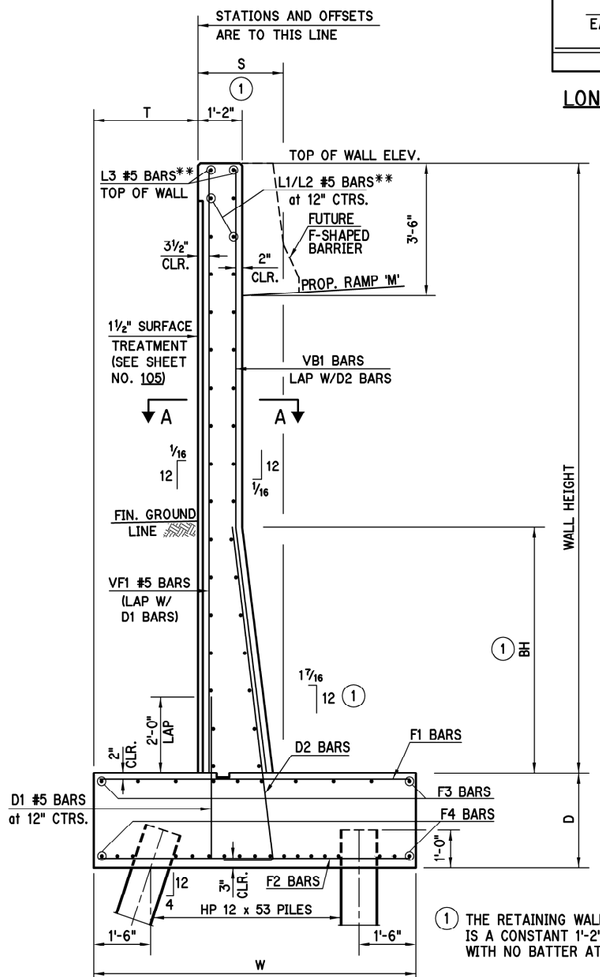

TYPICAL SECTION

1 THE RETAINING WALL FOR PANEL 5 IS A CONSTANT 1'-2" THICKNESS WITH NO BATTER AT THE BASE.

NOTE: ALL EXPOSED EDGES SHALL HAVE A 1" CHAMFER UNLESS OTHERWISE NOTED.

RETAINING WALL SCHEDULE

PANEL NO.	PANEL LENGTH	DIMENSIONS: WALL HEIGHT MIN.	MAX.	AVG.	BH	FOOTING W	D	T	S	PILING (HP 12x53): FRONT ROW NO.	SPA.	LENGTH	BACK ROW NO.	SPA.	LENGTH	TOTAL PILES
1	25.00'	14'-8½"	16'-1 3/16"	15'-4 7/8"	6'-6"	8'-6"	2'-6"	2'-9"	2'-0⅛"	3	10'-0"	16'-0"	2	20'-0"	15'-0"	5
2	25.00'	13'-3¾"	14'-8½"	14'-0⅛"	6'-6"	8'-6"	2'-6"	2'-9"	2'-0⅛"	3	10'-0"	18'-0"	2	20'-0"	17'-0"	5
3	25.00'	11'-11"	13'-3¾"	12'-7⅜"	4'-0"	7'-9"	2'-6"	2'-6"	1'-8¼"	2	20'-0"	20'-0"	2	20'-0"	19'-0"	4
4	25.00'	10'-6⅜"	11'-11"	11'-2 11/16"	4'-0"	7'-9"	2'-6"	2'-6"	1'-8¼"	2	20'-0"	22'-0"	2	20'-0"	21'-0"	4
5	32.67'	8'-7 9/16"	10'-6⅜"	9'-6¾"	---	6'-9"	2'-6"	2'-0"	1'-2"	3	13'-10"	24'-0"	3	13'-10"	23'-0"	6

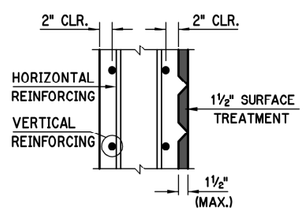

SECTION A-A

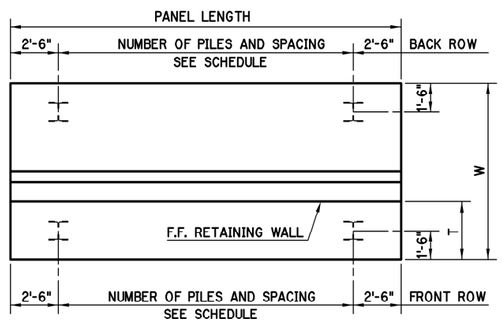

PILE SPACING DIAGRAM

NOTE: ALL PILES ARE HP 12 x 53.
(BATTER FRONT ROW 4:12)

NOTE: FOR EXCAVATION AND BACKFILL DIAGRAMS, SEE SHEET NO. 105

RETAINING WALL QUANTITIES

	ITEM	UNIT	TOTAL
PAY ITEMS	RETAINING WALL	S.Y.	183
	PILES, FURNISHED (HP 12 x 53)	L.F.	471
	PILES, DRIVEN (HP 12 x 53)	L.F.	471
NON-PAY ITEMS	CLASS A CONCRETE	C.Y.	173.70
	REINFORCING STEEL	LB.	19,670
	SUBSTR. EXCAV. COMMON	C.Y.	200
	6" PERF. PIPE UNDERDRAIN	L.F.	133
	6" NON-PERF. PIPE UNDERDRAIN	L.F.	25
	PIPE UNDERDRAIN COVER MAT'L.	C.Y.	25
	GRANULAR BACKFILL	C.Y.	1500
	1½" CONCRETE SURFACE TREATMENT	S.Y.	176

OKLAHOMA COUNTY

Design		
Drawn		
Checked		
Approved		
Squad	POE	

C.I.P. RETAINING WALL DETAILS
WALL 'N'
(SHEET 1 OF 2)

State Job No. 09032(17) Sheet No. 104

SEPT 07, 2016 - 19:02:21
H:\PROJECTS\2789_CrossRoads_InterX_New\PHASE 1A\Bridge\CADDrawings\1A RetWalls\PHASE1A-RETWALL-CIP-DETAILS.DWG

REVISIONS	
DESCRIPTION	DATE

NOTE: WATERSTOP SHALL BE PLACED THE FULL HEIGHT OF WALL. COST SHALL BE INCLUDED IN OTHER ITEMS OF WORK.

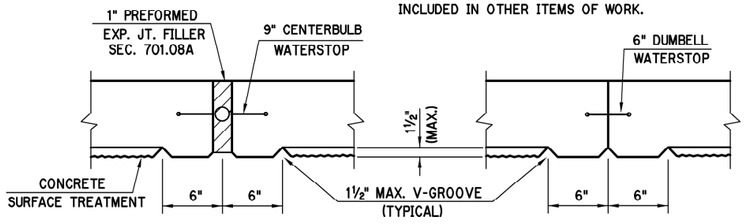

EXPANSION JOINT CONSTRUCTION JOINT

JOINT DETAILS

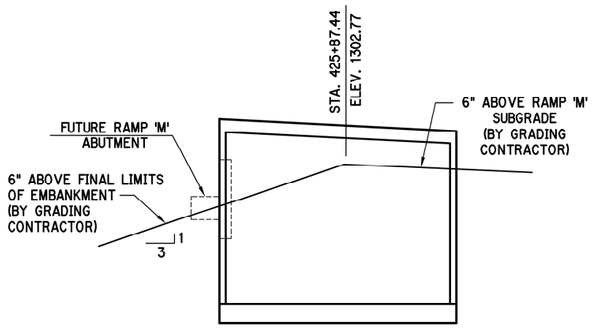

GRADING DETAIL BEHIND PANEL (1)

DESIGN DATA

DESIGN: AASHTO LRFD BRIDGE DESIGN SPECIFICATIONS, 2012 EDITION.

CLASS A CONCRETE: fc' = 3 KSI
REINFORCING STEEL: fy = 60 KSI
STRUCTURAL STEEL (PILING) M270 GRADE 50: fy = 50 KSI

STEEL PILING:
ALL PILING SHALL BE DRIVEN THROUGH THE COMPACTED FILL. PILING SHALL BE DRIVEN TO A POINT BEARING ON SOLID FOUNDATION MATERIAL AT THE APPROXIMATE ELEVATION SHOWN ON THE PLANS. IF PRACTICAL REFUSAL IS NOT OBTAINED AT THIS ELEVATION, DRIVING SHALL CONTINUE UNTIL THE MINIMUM REQUIRED PILE CAPACITY IS OBTAINED AS DETERMINED BY THE E.N.R. FORMULA METHOD. THE LENGTH OF STEEL PILING SHOWN ON THE PLANS IS FOR ESTIMATING PURPOSES ONLY.

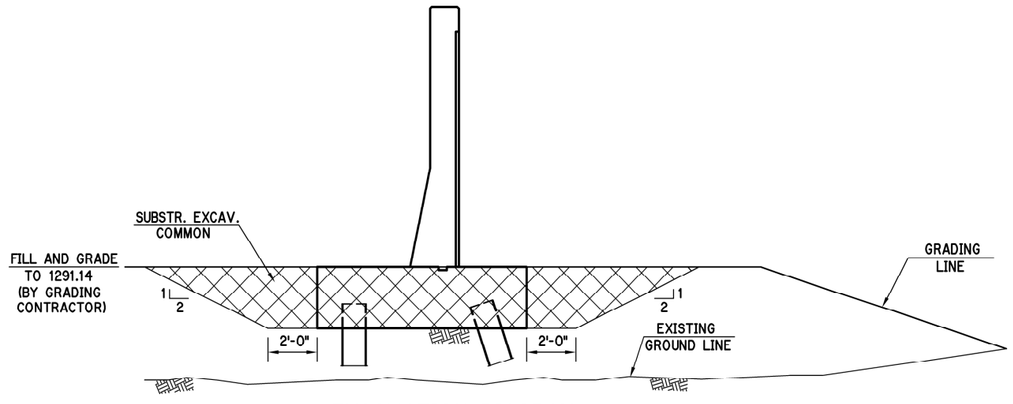

EXCAVATION DIAGRAM

FOUNDATION LOADS
(STRENGTH IV CONTROLS)

PILE FOUNDATION REACTION - HP 12 x 53 PILES	PANELS 1 & 2	PANELS 3 & 4	PANEL 5	
MAX. FACTORED PILE REACTION =	67.7	78.5	51.1	TONS/PILE

THE FOLLOWING FORMULA (GATES EQUATION) SHALL BE USED TO DETERMINE THE AXIAL LOAD RESISTANCE OF THE DRIVEN FOUNDATION PILES:

AXIAL LOAD RESISTANCE = ϕ [(0.875 $\sqrt{E}$ LOG_{10} (10N))-50] (TONS)

WHERE:

ϕ = RESISTANCE FACTOR OF 0.4

E = ENERGY PRODUCED BY THE HAMMER PER BLOW IN FOOT-POUNDS. FOR GRAVITY AND SINGLE ACTING DIESEL HAMMERS, THE VALUE IS BASED ON THE ACTUAL RAM STROKE OBSERVED IN THE FIELD AND MEASURED IN FEET MULTIPLIED BY THE RAM WEIGHT IN POUNDS.

N = AVERAGE NUMBER OF HAMMER BLOWS PER INCH OF PILE PENETRATION FOR THE LAST 10 TO 20 BLOWS DELIVERED TO THE PILE HEAD.

THE ABOVE FORMULA IS ONLY APPLICABLE WHEN:

- THE PILE DRIVING HAMMER HAS A FREE FALL (GRAVITY & SINGLE ACTING HAMMERS ONLY)
- THE HEAD OF THE PILE IS NOT BROOMED, CRUSHED OR OTHERWISE DAMAGED.
- THE PENETRATION IS QUICK AND UNIFORM.
- THERE IS NO APPRECIABLE REBOUND OF THE HAMMER AND A FOLLOWER IS NOT USED.

THE NUMBER OF BLOWS PER INCH OF PILE PENETRATION MAY BE MEASURED EITHER DURING INITIAL DRIVING OR BY RE-DRIVING WITH A WARM HAMMER OPERATED AT FULL ENERGY AFTER A PILE SET PERIOD, AS DETERMINED BY THE ENGINEER.

IF WATER JETS ARE USED IN CONNECTION WITH THE DRIVING, DETERMINE THE AXIAL LOAD RESISTANCE BY THE FORMULA SHOWN ONLY AFTER THE JETS HAVE BEEN WITHDRAWN.

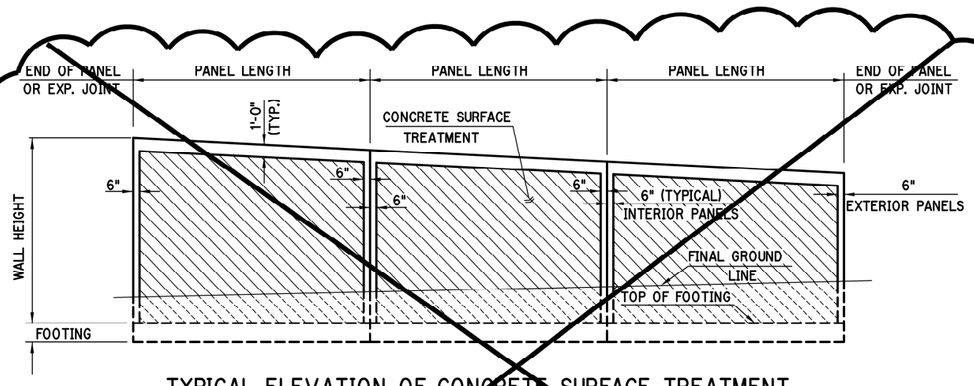

TYPICAL ELEVATION OF CONCRETE SURFACE TREATMENT

CONCRETE SURFACES OF RETAINING WALLS SHALL HAVE A TEXTURED APPEARANCE AS INDICATED ON THE PLANS.

THE TEXTURED SURFACES WILL HAVE A 1½" MAX. VERTICAL RELIEF. "ASHLAR STONE" APPEARANCE AS PRODUCED BY USING FORM LINERS MANUFACTURED BY SYMONS CORPORATION, ARCHITECTURAL POLYMERS OR AN APPROVED EQUAL.

THE FORM LINING MATERIAL SHALL BE FULL SIZED COMMERCIAL PANELS, AND JOINTS SHALL BE LINED UP, IN SO FAR AS IS PRACTICAL. NO SCRAP OR ODD SIZED PIECES WILL BE USED. PROVISIONS WILL BE MADE IN ADJUSTMENT OF FORMS TO CORRECT ANY DEFORMATIONS. FORM LINERS MUST BE SEALED AT ALL ENDS, EDGES, JOINTS, AND TIE HOLES TO PREVENT DISCOLORATION, SANDSTREAKING AND FINS ON CONCRETE SURFACES. ALL CHAMFER STRIPS FOR V-GROOVES MUST BE WELL OILED TO FACILITATE STRIPPING. AS SOON AS FORMS ARE REMOVED, ALL DISCONTINUITY OF RELIEF PATTERN, PARTICULARLY AT PANEL BUTT JOINTS, SHALL BE DRESSED IN A MANNER APPROVED BY THE ENGINEER.

THE CONTRACTOR WILL FURNISH THE ENGINEER WITH A 12" x 18" SAMPLE PANEL FINISHED AND STAINED IN THE MANNER THE CONCRETE WALL TREATMENT IS TO BE FINISHED FOR APPROVAL.

ALL COST OF CONCRETE WALL TREATMENT INCLUDING FINISHING, FORM LINERS, STAINING, LABOR, MATERIALS, TOOLS, AND INCIDENTALS NECESSARY TO COMPLETE THE WORK AS SPECIFIED SHALL BE INCLUDED IN OTHER ITEMS OF WORK.

NOTE: ARCHITECTURAL FORMLINER AND DETAIL TO BE PROVIDED AT A LATER DATE BY ODOT.

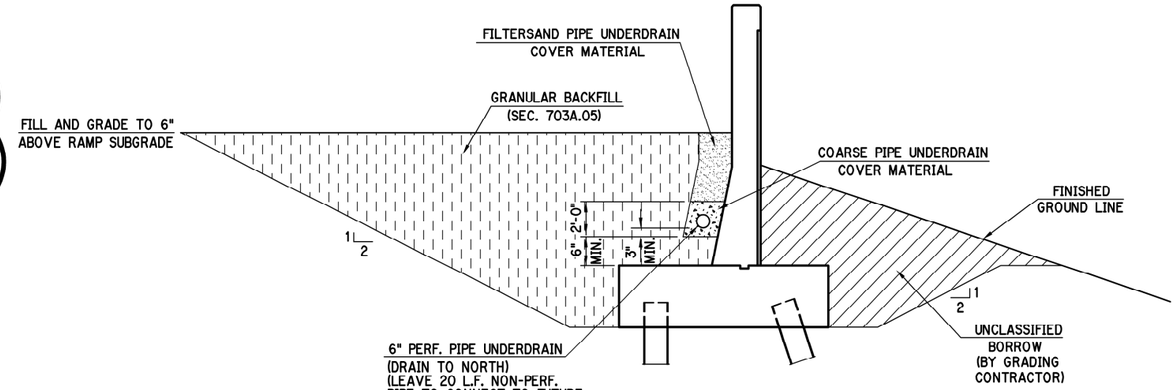

UNDERDRAIN INSTALLATION
(TYPICAL)

OKLAHOMA COUNTY

Design		
Drawn		
Checked		
Approved		
Squad	POE	

C.I.P. RETAINING WALL DETAILS
WALL 'N'
(SHEET 2 OF 2)

State Job No. 09032(17) Sheet No. 105

SEPT 07, 2016 - 19:02:21
H:\PROJECTS\2789_CrossRoads_InterX_New\PHASE IA\Bridge\CADDrawings\1A RetWalls\PHASE1A-RETWALL-CIP-DETAILS.DWG

REVISIONS	
DESCRIPTION	DATE

NOTE:
FOR ADDITIONAL RISER DETAILS
SEE STD. MJB-3

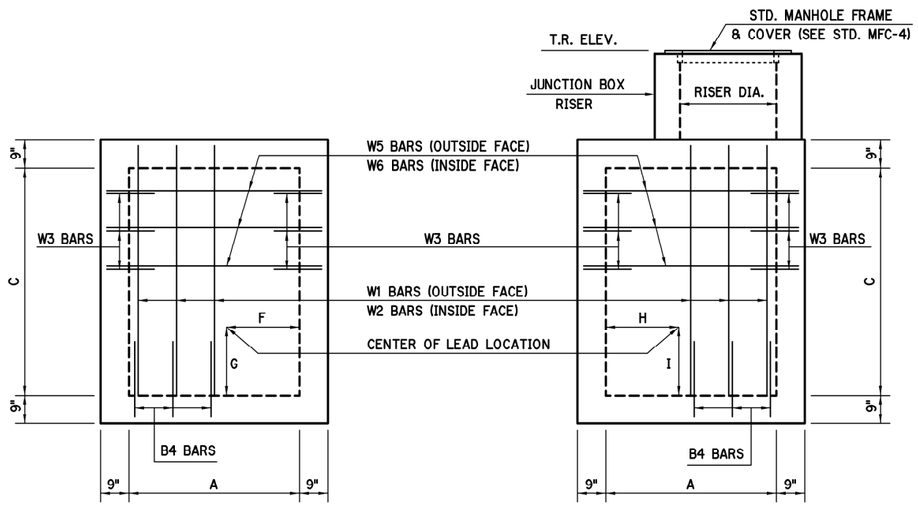

ELEVATION - SIDE A

ELEVATION - SIDE B

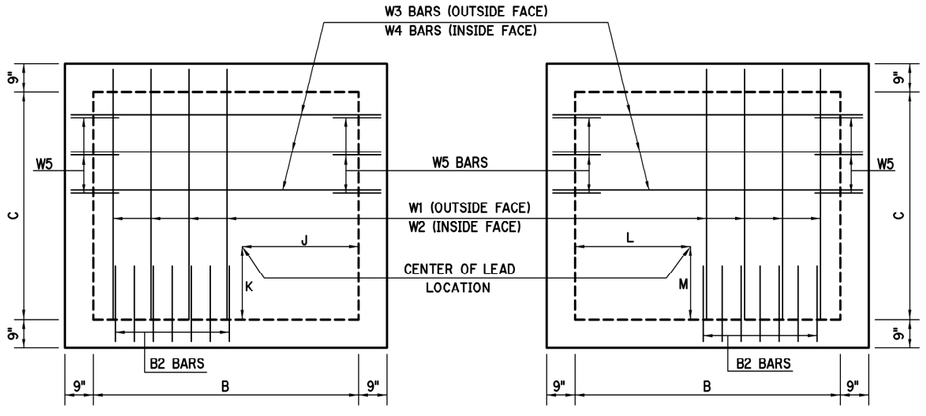

ELEVATION - SIDE C

ELEVATION - SIDE D

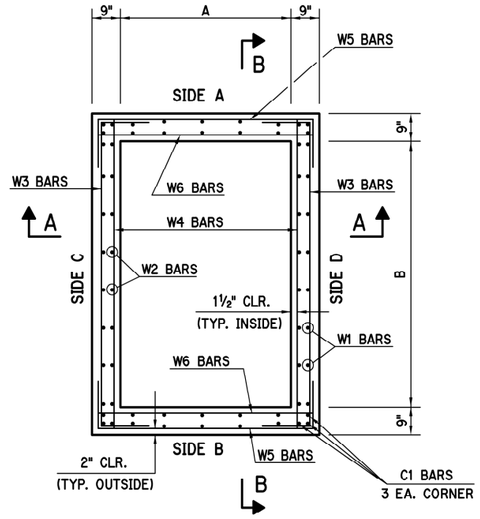

PLAN SECTION

NOTE:
CONCRETE SHALL BE CLASS A.
REINFORCING STEEL SHALL BE GRADE 60.

UNIT STRESSES

CLASS A CONCRETE: F'c = 3000 P.S.I.
REINFORCING STEEL: Fy = 60,000 P.S.I.

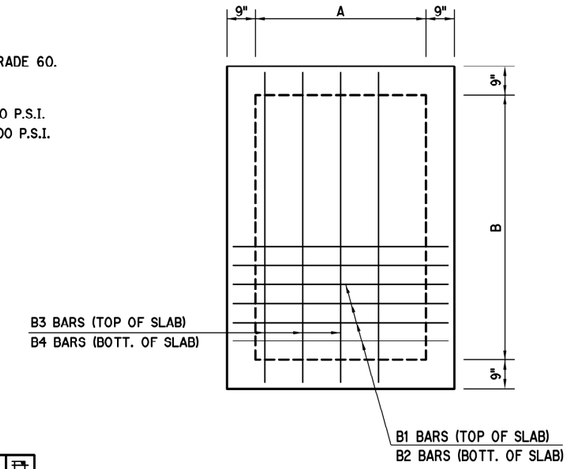

BOTTOM SLAB

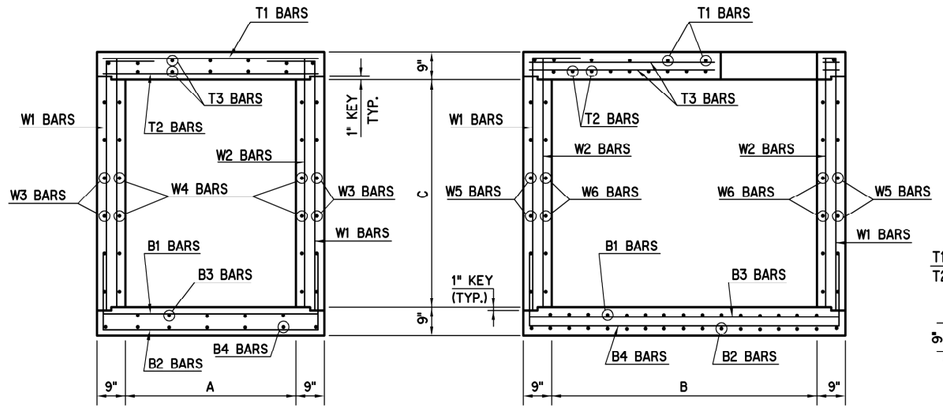

SEC. A - A

SEC. B - B

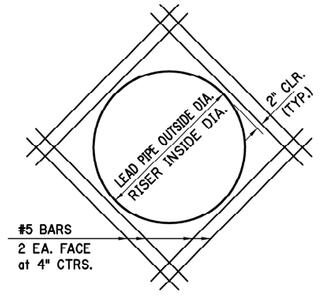

DETAIL OF ADD'L REINF.
AT LEAD PIPES & RISER

(BARS SHOWN ARE NOT INCLUDED
IN REINFORCING STEEL QUANTITY)

NOTE:
CUT ALL BARS AS NECESSARY TO PERMIT PLACEMENT OF R.C.P. LEADS & MANHOLE ACCESSES. PORTIONS OF BARS NOT USED IN CONSTRUCTION TO BECOME PROPERTY OF THE CONTRACTOR & SHALL BE DISPOSED OF IN A MANNER SATISFACTORY TO THE ENGINEER.

CONSTRUCT ROUNDED INVERTS IN BOTTOM OF JUNCTION BOX AND SLOPE TO OUTLET PIPE.

FOR ORIENTATION DIAGRAMS SEE SHEET NO. 108.

FOR DIMENSION SCHEDULE, BAR LISTS, BENT BAR DETAILS AND QUANTITIES SEE SHEET NO. 107.

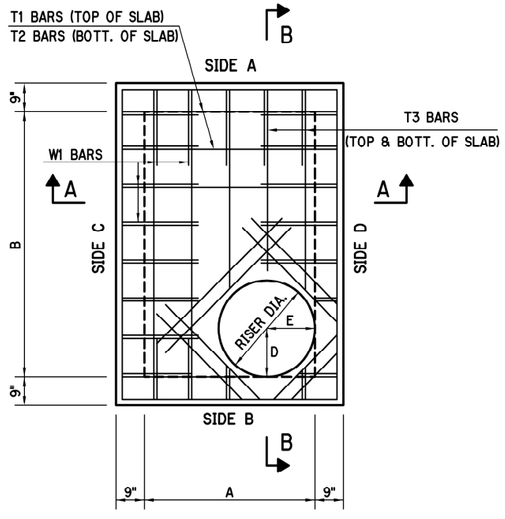

TOP SLAB

Design		
Drawn		
Checked		
Approved		
Squad	POE	

SPECIAL JUNCTION BOX DETAILS
(SHEET 1 OF 2)

State Job No. 09032(17) Sheet No. 106

SEPT 07, 2016 - 17:09:40
H:\PROJECTS\2789_CrossRoads_InterX_New\PHASE IA\Bridge\CADDrawings\1A-DrainStructures\PHASE 1A - JCTBOX DETAILS.DWG

REVISIONS

DESCRIPTION	DATE

SCHEDULE OF REINFORCING BARS

STR. NO.	W1 (BENT)						W2				W3 (BENT)						W4				W5 (BENT)						W6				T1				T2				T3			
	NO.	SIZE	SPA.	LENGTH	X	Y	NO.	SIZE	SPA.	LENGTH	NO.	SIZE	SPA.	LENGTH	X	Y	NO.	SIZE	SPA.	LENGTH	NO.	SIZE	SPA.	LENGTH	X	Y	NO.	SIZE	SPA.	LENGTH	NO.	SIZE	SPA.	LENGTH	NO.	SIZE	SPA.	LENGTH	NO.	SIZE	SPA.	LENGTH
G20	34	4	12"	8'-8"	2'-0"	6'-8"	34	4	12"	6'-7"	14	4	12"	11'-8"	9'-2"	1'-3"	14	4	12"	9'-2"	14	4	12"	10'-8"	8'-2"	1'-3"	14	4	12"	8'-2"	11	5	12"	8'-2"	20	5	6"	8'-2"	20	4	12"	9'-2"
G21	34	4	12"	8'-8"	2'-0"	6'-8"	34	4	12"	6'-7"	14	4	12"	11'-8"	9'-2"	1'-3"	14	4	12"	9'-2"	14	4	12"	10'-8"	8'-2"	1'-3"	14	4	12"	8'-2"	11	5	12"	8'-2"	20	5	6"	8'-2"	20	4	12"	9'-2"
G22	34	4	12"	8'-8"	2'-0"	6'-8"	34	4	12"	6'-7"	14	4	12"	11'-8"	9'-2"	1'-3"	14	4	12"	9'-2"	14	4	12"	10'-8"	8'-2"	1'-3"	14	4	12"	8'-2"	11	5	12"	8'-2"	20	5	6"	8'-2"	20	4	12"	9'-2"
G32	26	4	12"	6'-8"	2'-0"	4'-8"	26	4	12"	4'-7"	10	4	12"	9'-8"	7'-2"	1'-3"	10	4	12"	7'-2"	10	4	12"	8'-8"	6'-2"	1'-3"	10	4	12"	6'-2"	9	5	12"	6'-2"	16	5	6"	6'-2"	16	4	12"	7'-2"
G33	30	4	12"	8'-2"	2'-0"	6'-2"	30	4	12"	6'-1"	12	4	12"	10'-8"	8'-2"	1'-3"	12	4	12"	8'-2"	12	4	12"	9'-8"	7'-2"	1'-3"	12	4	12"	7'-2"	10	5	12"	7'-2"	18	5	6"	7'-2"	18	4	12"	8'-2"
G34	30	4	12"	8'-2"	2'-0"	6'-2"	30	4	12"	6'-1"	12	4	12"	10'-8"	8'-2"	1'-3"	12	4	12"	8'-2"	12	4	12"	9'-8"	7'-2"	1'-3"	12	4	12"	7'-2"	10	5	12"	7'-2"	18	5	6"	7'-2"	18	4	12"	8'-2"

SCHEDULE OF REINFORCING BARS

STR. NO.	B1				B2 (BENT)						B3				B4 (BENT)						C1			
	NO.	SIZE	SPA.	LENGTH	NO.	SIZE	SPA.	LENGTH	X	Y	NO.	SIZE	SPA.	LENGTH	NO.	SIZE	SPA.	LENGTH	X	Y	NO.	SIZE	SPA.	LENGTH
G20	20	5	6"	8'-2"	20	5	6"	12'-2"	8'-2"	2'-0"	10	4	12"	9'-2"	10	4	12"	13'-2"	9'-2"	2'-0"	12	5	AS SHOWN	6'-8"
G21	20	5	6"	8'-2"	20	5	6"	12'-2"	8'-2"	2'-0"	10	4	12"	9'-2"	10	4	12"	13'-2"	9'-2"	2'-0"	12	5	AS SHOWN	6'-8"
G22	20	5	6"	8'-2"	20	5	6"	12'-2"	8'-2"	2'-0"	10	4	12"	9'-2"	10	4	12"	13'-2"	9'-2"	2'-0"	12	5	AS SHOWN	6'-8"
G32	16	5	6"	6'-2"	16	5	6"	10'-2"	6'-2"	2'-0"	8	4	12"	7'-2"	8	4	12"	11'-2"	7'-2"	2'-0"	12	5	AS SHOWN	4'-8"
G33	18	5	6"	7'-2"	18	5	6"	11'-2"	7'-2"	2'-0"	9	4	12"	8'-2"	9	4	12"	12'-2"	8'-2"	2'-0"	12	5	AS SHOWN	6'-2"
G34	18	5	6"	7'-2"	18	5	6"	11'-2"	7'-2"	2'-0"	9	4	12"	8'-2"	9	4	12"	12'-2"	8'-2"	2'-0"	12	5	AS SHOWN	6'-2"

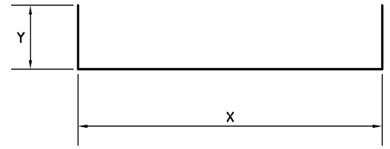

B2 BARS
B4 BARS
W3 BARS
W5 BARS
(SEE SCHEDULE)

SCHEDULE OF DIMENSIONS

STR. NO.	A	B	C	D	E	F	G	H	I	J	K	L	M
G20	7'-0"	8'-0"	6'-0"	6'-8 3/4"	5'-8 3/4"	3'-6"	4'-6 5/8	---	---	4'-0"	2'-6"	4'-0"	2'-6"
G21	7'-0"	8'-0"	6'-0"	6'-8 3/4"	5'-8 3/4"	3'-6"	4'-2 5/8"	---	---	4'-0"	2'-6"	4'-0"	2'-6"
G22	7'-0"	8'-0"	6'-0"	1'-3 1/4"	1'-3 1/4"	3'-6"	3'-3 5/8"	---	---	4'-0"	2'-6"	4'-0"	2'-6"
G32	5'-0"	6'-0"	4'-0"	1'-3 1/4"	1'-3 1/4"	2'-6"	1'-5 1/16"	2'-6"	1'-2 15/16"	3'-0"	1'-1"	3'-0"	1'-2 1/16"
G33	6'-0"	7'-0"	5'-6"	1'-3 1/4"	1'-3 1/4"	---	---	3'-0"	3'-8 3/8"	3'-6"	1'-3 1/2"	3'-6"	1'-4 3/4"
G34	6'-0"	7'-0"	5'-6"	1'-3 1/4"	1'-3 1/4"	3'-0"	3'-7 15/16"	---	---	3'-6"	1'-3 1/2"	3'-6"	1'-3 1/2"

NOTE: ALL BAR BEND DIMENSIONS ARE OUT TO OUT.

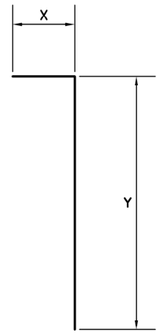

W1 BARS
(SEE SCHEDULE)

SCHEDULE OF ELEVATIONS

STR. NO.	STR. FL	RISERS			R.C.P./R.C.P.A. LEADS											
		LOC.	DIA.	TR ELEV.	LOC.	SIZE	FL ELEV.	LOC.	SIZE	FL ELEV.	LOC.	SIZE	FL ELEV.	LOC.	SIZE	FL ELEV.
G20	1271.37	D-E	30 1/2"	1281.92	F-G	18"	1275.17	---	---	---	J-K	60"	1271.37	L-M	60"	1271.37
G21	1271.08	D-E	30 1/2"	1279.76	F-G	18"	1274.55	---	---	---	J-K	60"	1271.08	L-M	60"	1271.08
G22	1270.78	D-E	30 1/2"	1279.05	F-G	28"x18"	1273.33	---	---	---	J-K	60"	1270.78	L-M	60"	1270.78
G32	1266.27	D-E	30 1/2"	1274.20	F-G	18"	1266.94	H-I	36"x22"	1266.60	J-K	43"x26"	1266.27	L-M	24"	1266.44
G33	1265.78	D-E	30 1/2"	1274.06	---	---	---	H-I	18"	1268.73	J-K	51"x31"	1265.78	L-M	43"x26"	1266.09
G34	1265.67	D-E	30 1/2"	1274.07	F-G	18"	1268.58	---	---	---	J-K	51"x31"	1265.67	L-M	51"x31"	1265.67

QUANTITIES STR. G20

ITEM	UNIT	TOTAL
CLASS "A" CONCRETE	C.Y.	9.70
REINFORCING STEEL	LB.	1770
MANHOLE FRAME AND COVER	EA.	1

QUANTITIES STR. G21

ITEM	UNIT	TOTAL
CLASS "A" CONCRETE	C.Y.	9.20
REINFORCING STEEL	LB.	1770
MANHOLE FRAME AND COVER	EA.	1

QUANTITIES STR. G22

ITEM	UNIT	TOTAL
CLASS "A" CONCRETE	C.Y.	9.10
REINFORCING STEEL	LB.	1770
MANHOLE FRAME AND COVER	EA.	1

QUANTITIES STR. G32

ITEM	UNIT	TOTAL
CLASS "A" CONCRETE	C.Y.	5.70
REINFORCING STEEL	LB.	1080
MANHOLE FRAME AND COVER	EA.	1

QUANTITIES STR. G33

ITEM	UNIT	TOTAL
CLASS "A" CONCRETE	C.Y.	7.90
REINFORCING STEEL	LB.	1430
MANHOLE FRAME AND COVER	EA.	1

QUANTITIES STR. G34

ITEM	UNIT	TOTAL
CLASS "A" CONCRETE	C.Y.	7.80
REINFORCING STEEL	LB.	1430
MANHOLE FRAME AND COVER	EA.	1

Design		
Drawn		
Checked		
Approved		
Squad	POE	

SPECIAL JUNCTION BOX DETAILS
(SHEET 2 OF 2)

State Job No. 09032(17) Sheet No. 107

SEPT 07, 2016 - 17:09:40
H:\PROJECTS\2789__CrossRoads__InterX__New\PHASE 1A\Bridge\CADDrawings\1A-DrainStructures\PHASE 1A - JCTBOX DETAILS.DWG

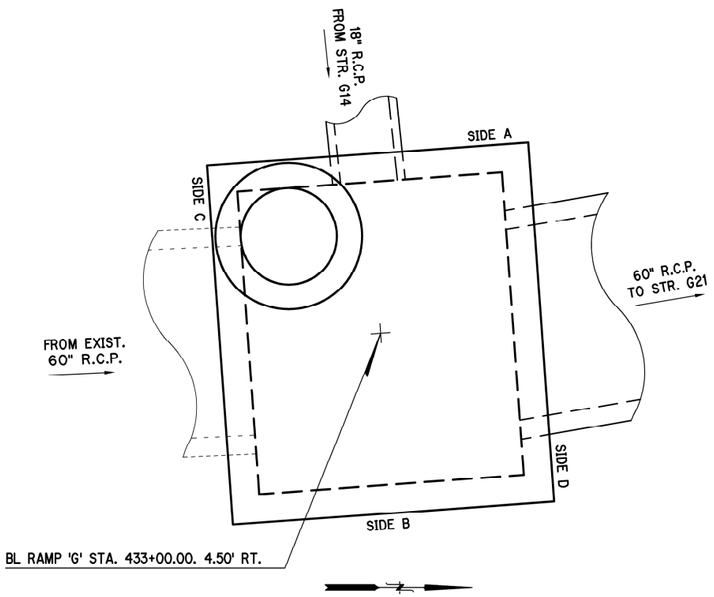

STR. NO. G20

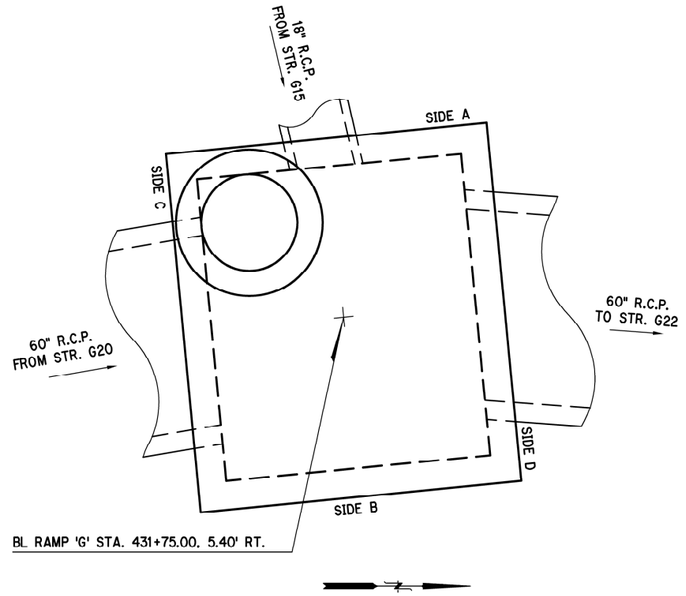

STR. NO. G21

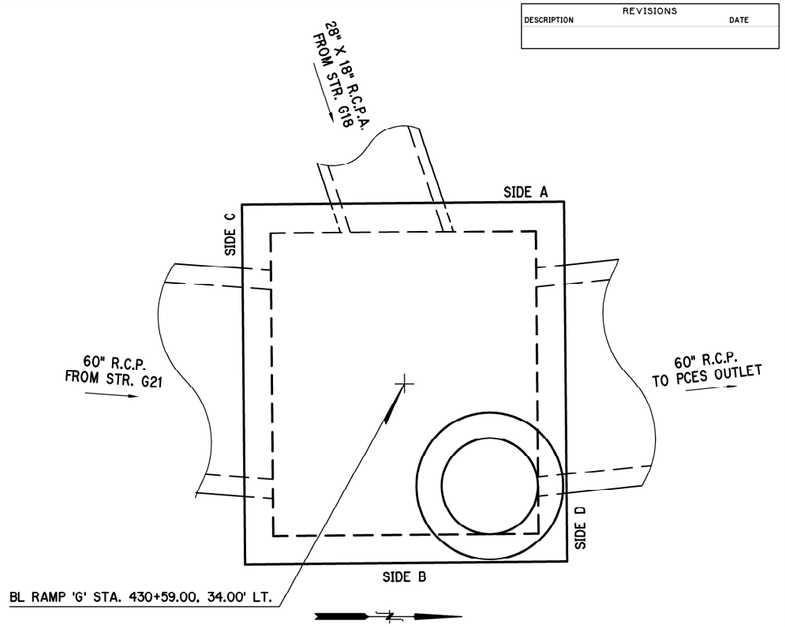

STR. NO. G22

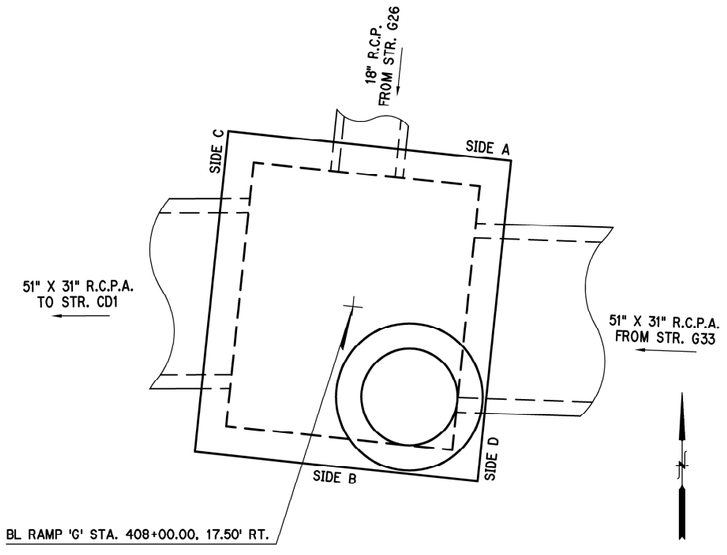

STR. NO. G34

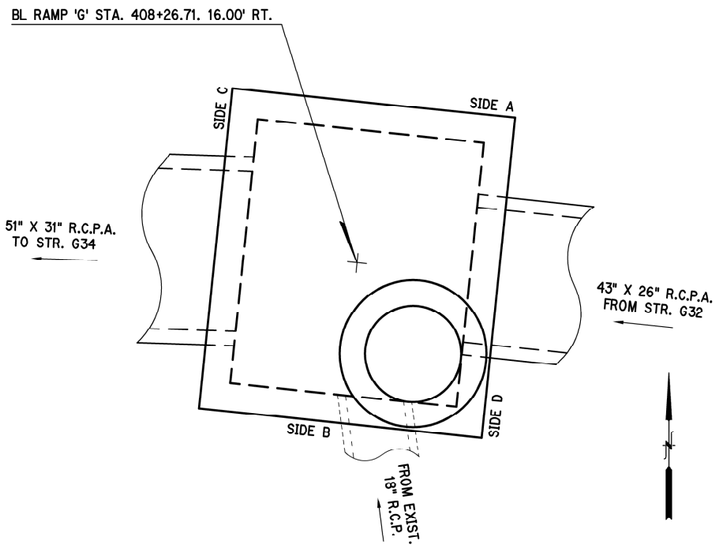

STR. NO. G33

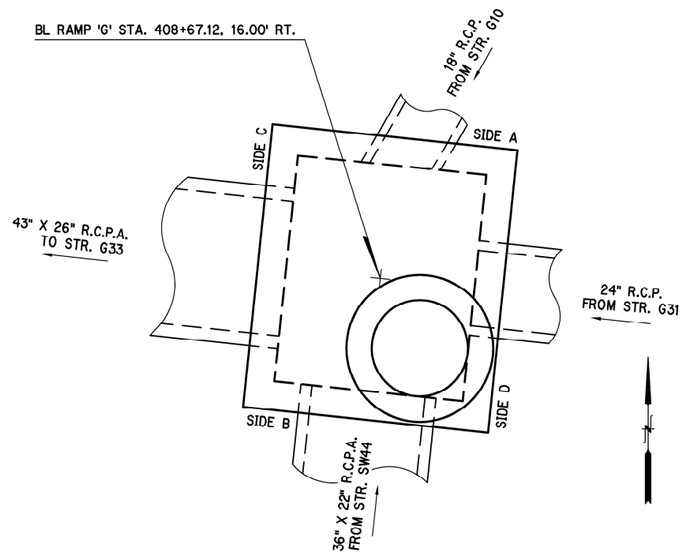

STR. NO. G32

NOTE:
SEE SHEETS 106 AND 107
FOR JUNCTION BOX DETAILS.

REVISIONS	
DESCRIPTION	DATE

Design		
Drawn		
Checked		
Approved		
Squad	POE	

SPECIAL JUNCTION BOX ORIENTATION DIAGRAMS

State Job No. 09032(17) Sheet No. 108

SEPT 07, 2016 - 17:16:47
H:\PROJECTS\2789_CrossRoads_InterX_New\PHASE IA\Bridge\CADDrawings\1A-DrainStructures\PHASE 1A - JCTBOX LOCATIONS.DWG

REVISIONS	
DESCRIPTION	DATE

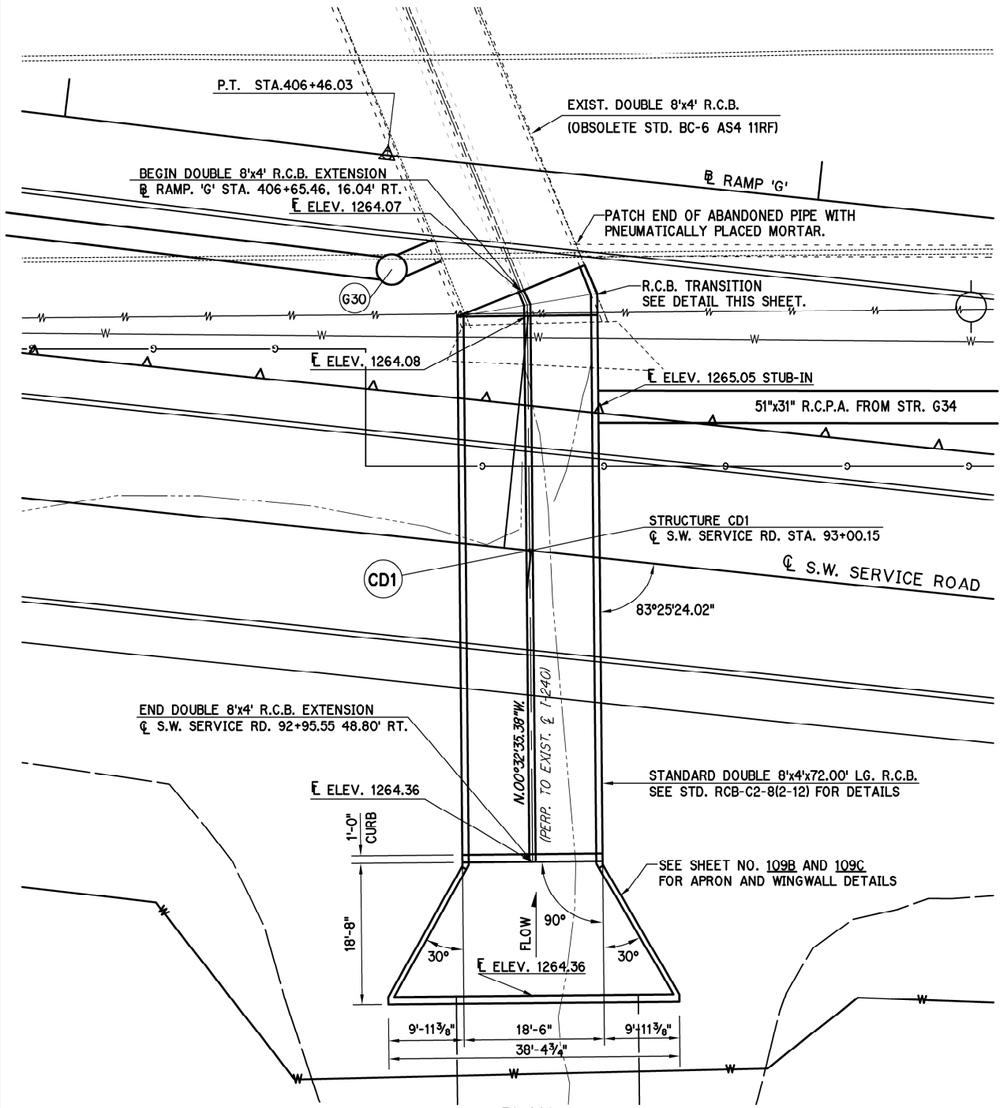

PLAN

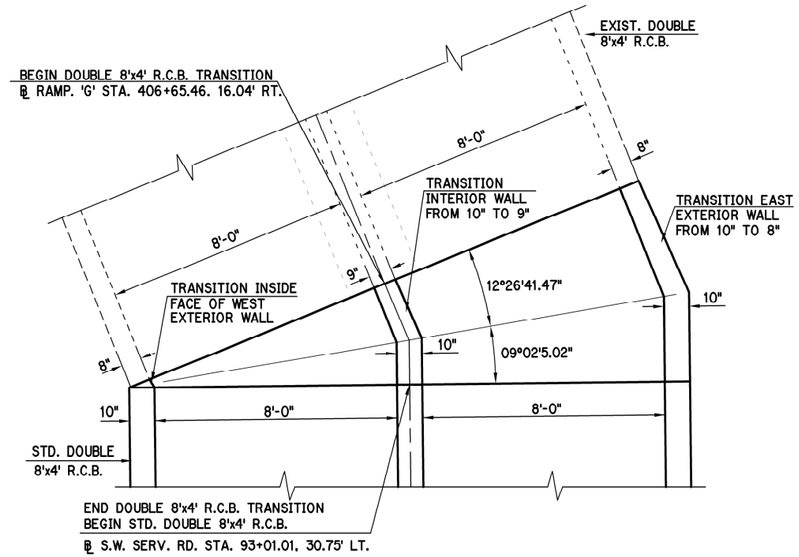

R.C.B. TRANSITION DETAIL

(FOR MORE INFORMATION ON THE REINFORCING OF R.C.B. TRANSITION, SEE DETAILS ON SHEET NO. 109A.)

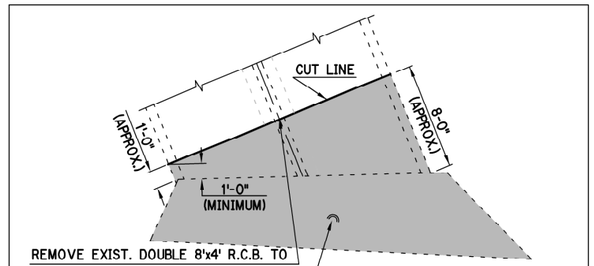

REMOVAL DETAIL

INDEX OF SHEETS

SHEET NO.	DESCRIPTION
36	SUMMARY OF PAY QUANTITIES - ROADWAY
109	R.C.B. EXTENSION DETAILS, PAY QUANTITIES & GEN. NOTES -STR. 'CD1'
109A-109C	R.C.B. EXTENSION DETAILS - STRUCTURE 'CD1'

STANDARDS REQUIRED

BRIDGE STDS.	ROADWAY STDS.
RCB-C2-8(2-12)	SBI-4-2

GENERAL NOTES:

1. ALL CONSTRUCTION AND MATERIAL REQUIREMENTS SHALL BE IN ACCORDANCE WITH THE 2009 OKLAHOMA STANDARD SPECIFICATIONS FOR HIGHWAY CONSTRUCTION.
2. ALL CONCRETE EDGES SHALL HAVE A 1½" CHAMFER UNLESS OTHERWISE SHOWN OR NOTED. ALL CHAMFER STRIPS SHALL BE SIZED LUMBER.
3. ALL REINFORCING STEEL SHALL HAVE A 2" MINIMUM CLEAR COVER UNLESS OTHERWISE SHOWN.
4. THE ORIGINAL PLANS FOR THE EXISTING BOX CALL FOR THE OBSOLETE ODOT STANDARD BC-6 AS4 11RF, WHICH HAS A 1 ½" SUMP TO THE CENTER OF EACH CELL. THE TYPICAL SECTION OF THE NEW EXTENSION WAS BASED ON THIS STANDARD. THE CONTRACTOR SHALL VERIFY IF THE EXISTING BOTTOM SLAB IS SUMPED AND CONSTRUCT THE SLAB OF NEW EXTENSION TRANSITION TO MEET AND MATCH. IF THE EXISTING BOTTOM SLAB IS FLAT, THE SLAB OF THE NEW EXTENSION TRANSITION SHALL BE CONSTRUCTED AT A CONSTANT THICKNESS OF 1'-0".

VERIFICATION OF EXISTING CONDITIONS:

STATION, OFFSET, FLOW LINE AND DIMENSIONS OF EXISTING R. C. BOX SHOWN ON THE PLANS ARE APPROXIMATE. THE CONTRACTOR SHALL VERIFY ALL DIMENSIONS NECESSARY TO CONNECT THE NEW MATERIAL AND SHALL BE SOLELY RESPONSIBLE FOR THE ACCURACY THEREOF.

BIDDERS WILL FULLY INFORM THEMSELVES OF THE NATURE OF THE WORK AND CONDITION UNDER WHICH IT WILL BE PERFORMED. THE CONTRACTOR SHALL ADOPT METHODS CONSISTENT WITH GOOD CONSTRUCTION PRACTICE AND SHALL TAKE ALL NECESSARY PRECAUTIONS TO PREVENT DAMAGE TO THE EXISTING R. C. BOX. ANY DAMAGE TO THE EXISTING STRUCTURE DUE TO THE CONTRACTOR'S NEGLIGENCE SHALL BE REPAIRED AT THE CONTRACTOR'S EXPENSE TO THE SATISFACTION OF THE ENGINEER.

REMOVAL OF CULVERT END:

ALL COST OF REMOVING AND DISPOSING OF EXISTING WINGWALLS, APRON AND PORTION OF THE R. C. BOX INDICATED AND TREES INHIBITING R.C.B. EXTENSION SHALL BE INCLUDED IN THE PRICE BID FOR "REMOVAL OF CULVERT END". REFER TO SUBSECTION 508.04.G OF THE STANDARD SPECIFICATIONS.

PNEUMATICALLY PLACED MORTAR:

ALL COST FOR REPAIRING DETERIORATED AREAS OF CONCRETE AND PATCHING OVER ABANDONED PIPE SHALL BE INCLUDED IN THE PRICE BID FOR "PNEUMATICALLY PLACED MORTAR". THE QUANTITY SHOWN IS APPROXIMATE AND PAYMENT SHALL BE BASED ON ACTUAL REPAIRS MADE, AS APPROVED BY THE ENGINEER. REFER TO SECTION 521 OF THE STANDARD SPECIFICATIONS.

UTILITIES:

(CAUTION) THE LOCATION OF ALL UTILITIES AS SHOWN ARE APPROXIMATE. DUE TO RELOCATION PLANNED OR PRESENTLY UNDER CONSTRUCTION, THERE ARE SOME UTILITIES THAT WILL BE RELOCATED AND NOT SHOWN ON THESE PLANS. THE CONTRACTOR SHALL BE RESPONSIBLE FOR ANY DAMAGE TO ALL UTILITIES. NO PAYMENT WILL BE MADE FOR REMOVAL OF ABANDONED UTILITY PIPE LINES THAT INTERFERE WITH CONSTRUCTION. ALL COST TO BE INCLUDED IN OTHER ITEMS.

OKLAHOMA ONE-CALL SYSTEM:

IN ACCORDANCE WITH THE OKLAHOMA UNDERGROUND FACILITIES DAMAGE PREVENTION ACT THE CONTRACTOR SHALL NOTIFY THE OKLAHOMA ONE-CALL SYSTEM, INC. 48 HOURS PRIOR TO BEGINNING EXCAVATION. OKLAHOMA ONE-CALL SYSTEM, INC. "CALL OKIE" 1-800-522-6543 OR 811.

QUANTITIES (R.C.B. EXTENSION)

ITEM	UNIT	TOTAL
UNCLASSIFIED EXCAVATION	C.Y.	524
STRUCTURAL EXCAVATION, UNCLASSIFIED	C.Y.	97
REMOVAL OF CULVERT END	EA.	1
CLASS AA CONCRETE	C.Y.	157.0
REINFORCING STEEL	LB.	22,860
PNEUMATICALLY PLACED MORTAR	S.Y.	2

DESIGN DATA:

1. DESIGNED IN ACCORDANCE WITH 2012 AASHTO LRFD BRIDGE DESIGN SPECIFICATIONS.
2. DESIGNED FOR HL-93 LOADING AND ODOT OVERLOAD TRUCK.
3. MATERIALS:
   CONCRETE (CLASS AA) F'c = 4 KSI
   REINFORCING STEEL F'y = 60 KSI

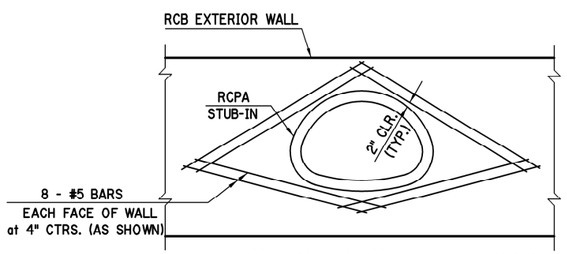

DETAIL OF ADDITIONAL REINFORCING AT 51"x 31" RCPA LEAD

(BARS SHOWN ARE NOT INCLUDED IN REINFORCING STEEL QUANTITY)

OKLAHOMA COUNTY

Design		
Drawn		
Checked		
Approved		
Squad	POE	

STRUCTURE CD1

R.C.B. EXTENSION DETAILS, PAY QUANTITIES & GEN. NOTES

℄ STA. 93+00.15 S.W. SERVICE ROAD
EXTEND EXIST. DOUBLE 8'x4' RCB
CONST. HEADWALL, WINGWALL AND APRON

State Job No. 09032(17) Sheet No. 109

SEPT 07, 2016 - 15:17:37
H:\PROJECTS\2789_CrossRoads_InterX_New\PHASE IA\Bridge\CADDrawings\1A-DrainStructures\PHASE 1A - RCB EXT.DWG

REVISIONS	
DESCRIPTION	DATE

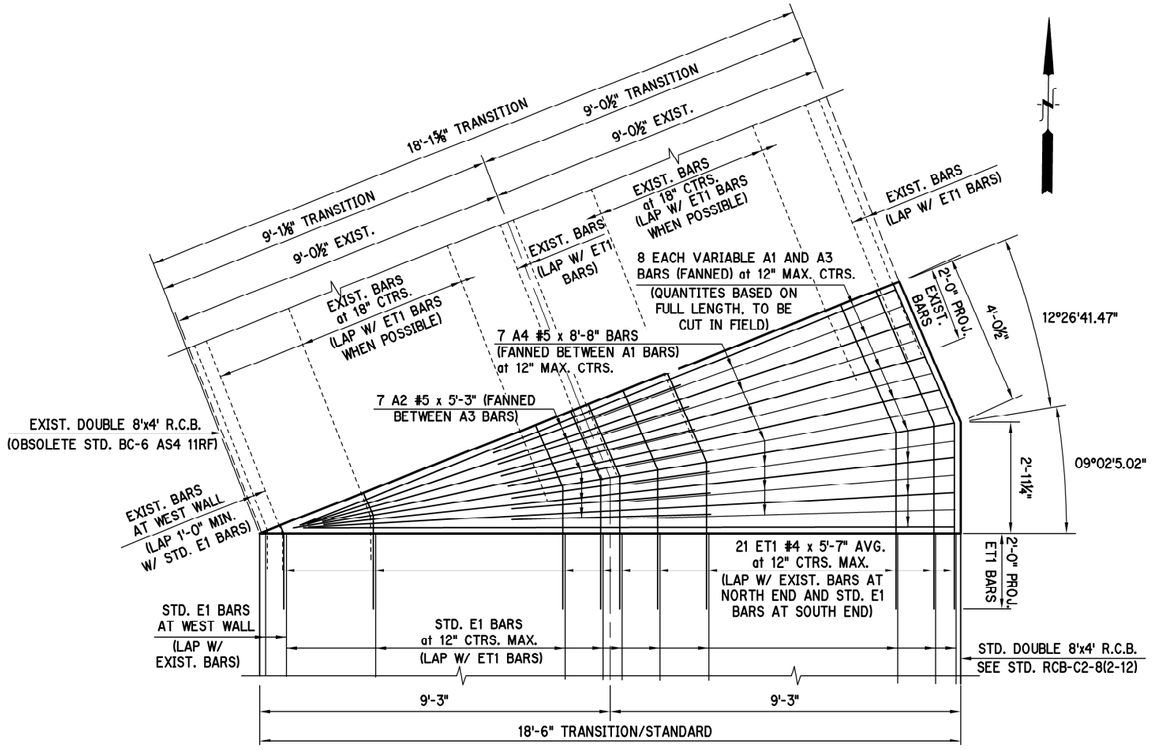

TOP/BOTTOM SLAB REINFORCEMENT DETAIL

(QUANTITIES SHOWN ARE FOR ONE SLAB, TWO ARE NEEDED)

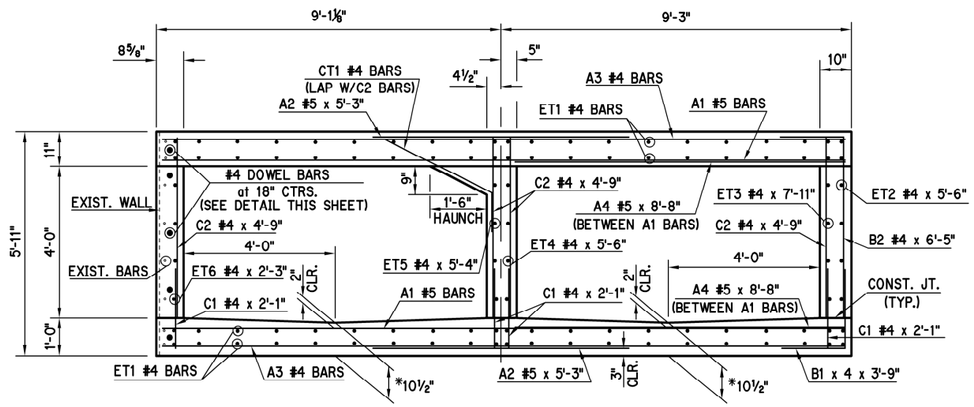

NOTE:
PLACE A2. B1. B2 AND CT1 BARS TURNED TO FIT ANGLED TRANSITION BOX WALLS.

HALF SECTION AT EXISTING R.C.B.

HALF SECTION AT PROPOSED STANDARD R.C.B.

SECTION

*SEE GENERAL NOTE NO. 4, SHEET NO. 109

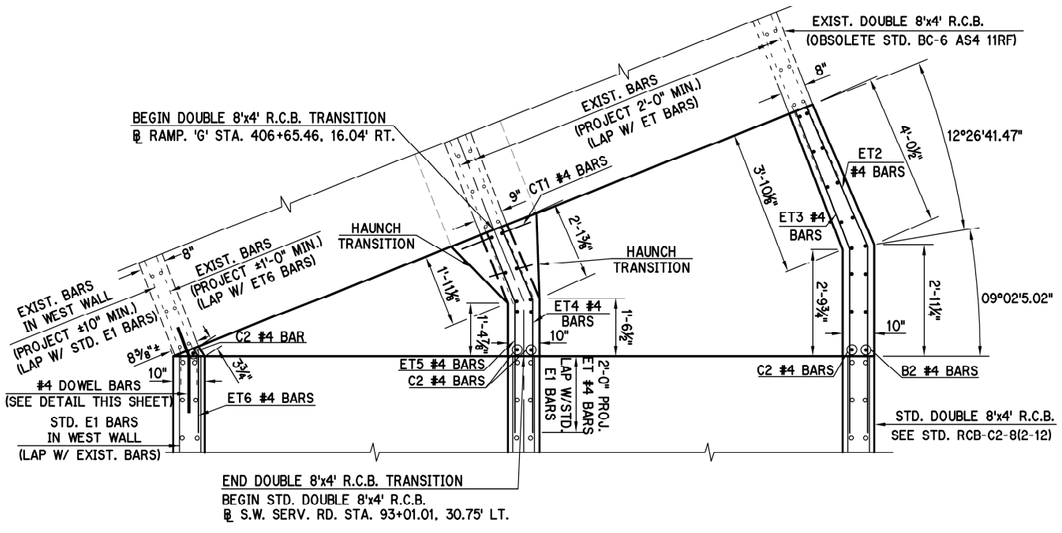

PLAN SECTION

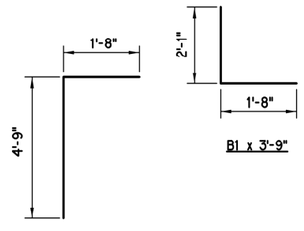

B1 x 3'-9"

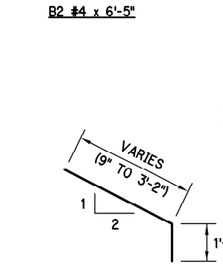

CT1 #4 x 2'-11½" AVG. (1'-9" TO 4'-2")

B2 #4 x 6'-5"

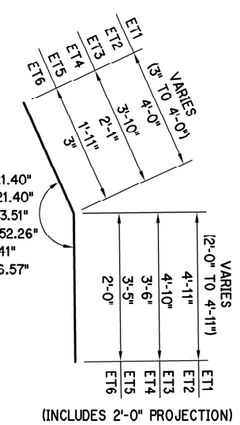

ET1 156°17'21.40"
ET2 156°17'21.40"
ET3 158°31'13.51"
ET4 156°04'52.26"
ET5 158°3'1.41"
ET6 150°32'6.57"

(INCLUDES 2'-0" PROJECTION)

ET1 #4 x 5'-7" AVG. (2'-3" TO 8'-11")
ET2 #4 x 8'-11"
ET3 #4 x 7'-11"
ET4 #4 x 5'-6"
ET5 #4 x 5'-4"
ET6 #4 x 2'-3"

ALL BAR BEND DIMENSIONS ARE OUT TO OUT

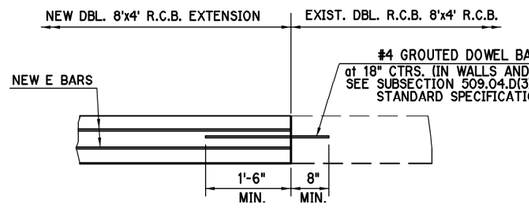

TYPICAL DETAIL OF ANCHORAGE ASSEMBLY

NOTE: ANCHORAGE ASSEMBLIES SHALL PROJECT 1'-6" INTO NEW CONCRETE. EMBEDMENT INTO EXISTING CONCRETE SHALL BE IN ACCORDANCE WITH THE STANDARD SPECIFICATIONS.

ALL COST FOR THE INSTALLATION OF GROUTED DOWEL BARS, INCLUDING LABOR, MATERIALS, TOOLS, DRILLING, AND INCIDENTALS NECESSARY TO COMPLETE THE WORK SHALL BE INCLUDED IN OTHER ITEMS OF WORK.

OKLAHOMA COUNTY

Design		
Drawn		
Checked		
Approved		
Squad	POE	

STRUCTURE 'CD1'

R.C.B. EXTENSION DETAILS
(SHEET 1 OF 3)

State Job No. 09032(17) Sheet No. 109A

SEPT 07, 2016 - 14:27:30
H:\PROJECTS\2789_CrossRoads_InterX_New\PHASE IA\Bridge\CADDrawings\1A-DrainStructures\PHASE 1A - RCB EXT DETS.DWG

REVISIONS	
DESCRIPTION	DATE

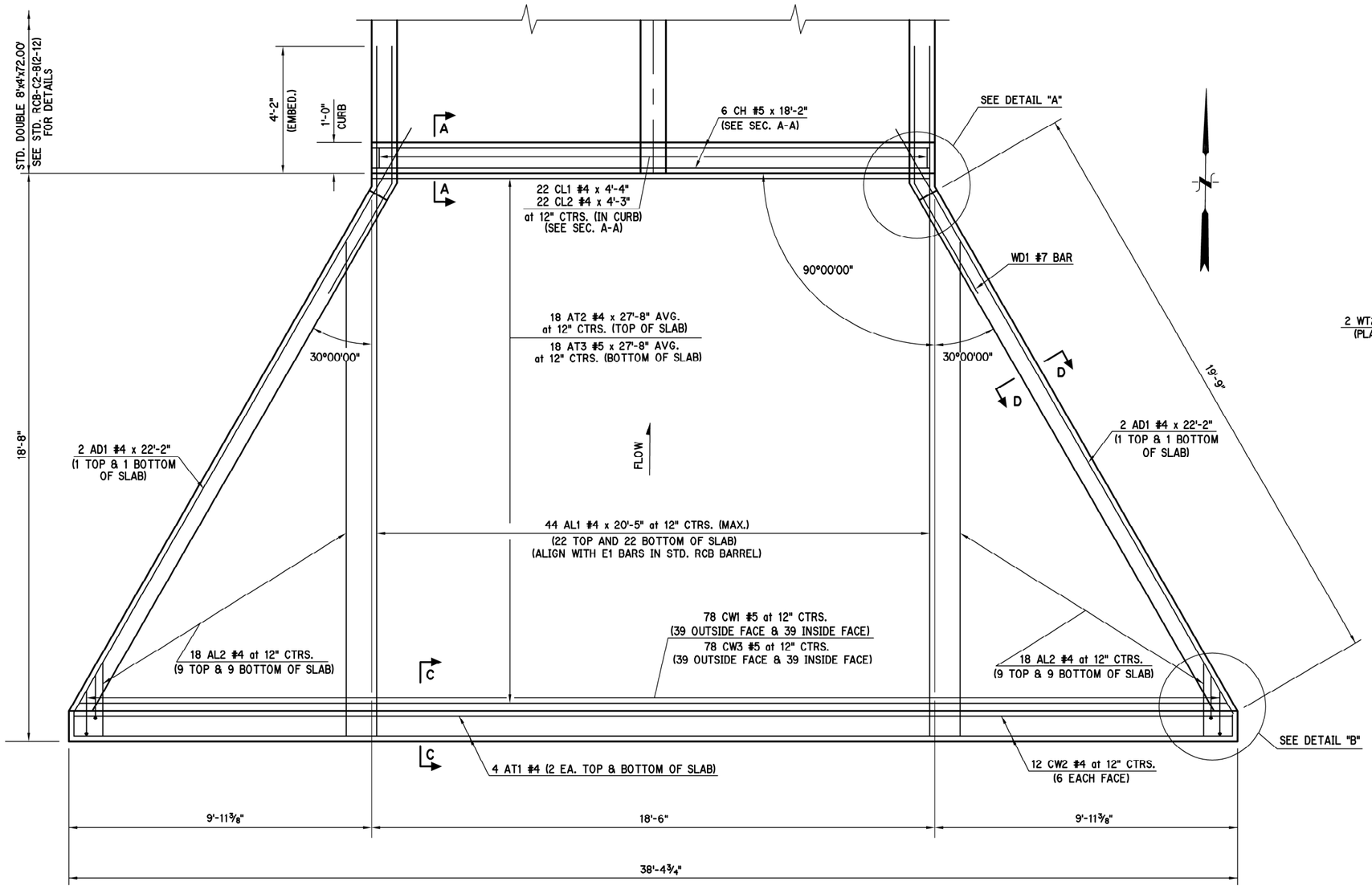

APRON REINFORCING LAYOUT

(SEE SHEET NO. 109C FOR SECTION C-C AND D-D)

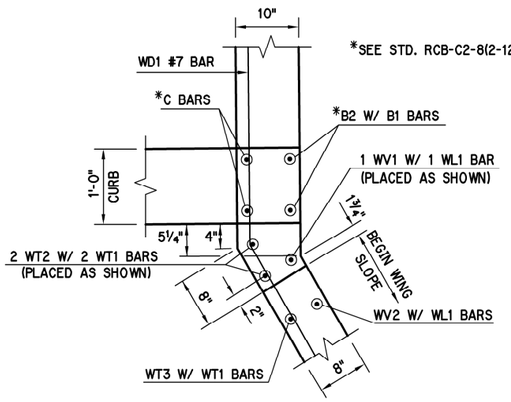

DETAIL 'A'

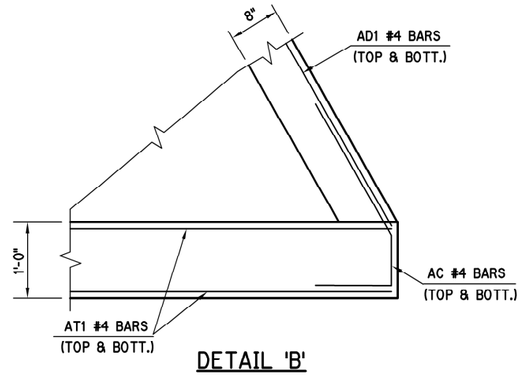

DETAIL 'B'

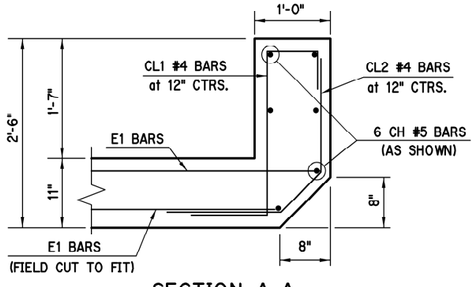

SECTION A-A

OKLAHOMA COUNTY

Design		STRUCTURE 'CD1'
Drawn		R.C.B. EXTENSION DETAILS
Checked		(SHEET 2 OF 3)
Approved		
Squad	POE	State Job No. 09032(17) Sheet No. 109B

SEPT 07, 2016 - 14:27:30
H:\PROJECTS\2789_CrossRoads_InterX_New\PHASE 1A\Bridge\CADDrawings\1A-DrainStructures\PHASE 1A - RCB EXT DETS.DWG

REVISIONS	
DESCRIPTION	DATE

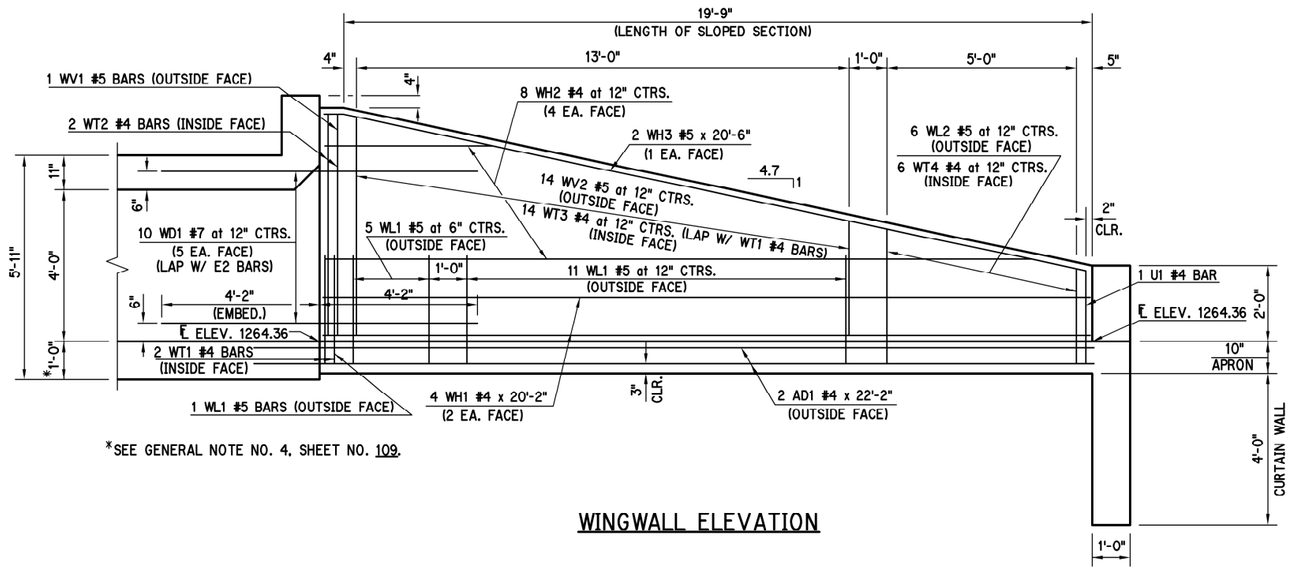

*SEE GENERAL NOTE NO. 4, SHEET NO. 109.

WINGWALL ELEVATION

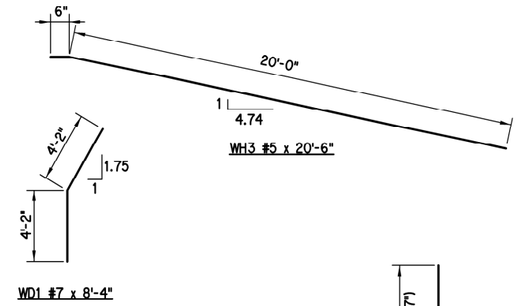

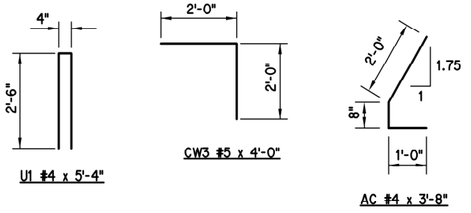

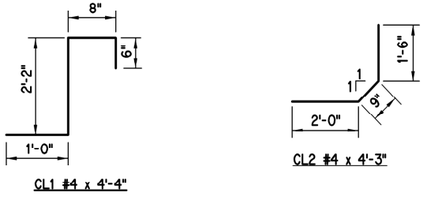

ALL BAR BEND DIMENSIONS ARE OUT TO OUT

BAR LIST

TRANSITION

	MARK	NO.	SIZE	FORM	SPACING	LENGTH
	A1	16	#5	STR.	AS SHOWN	18'-2" *
	A2	16	#5	STR.	AS SHOWN	5'-3"
	A3	14	#4	STR.	AS SHOWN	18'-2" *
	A4	14	#5	STR.	AS SHOWN	8'-8"
	B1	8	#4	BNT.	AS SHOWN	3'-9"
	B2	8	#4	BNT.	AS SHOWN	6'-5"
	C1	19	#4	STR.	AS SHOWN	2'-1"
	C2	19	#4	STR.	AS SHOWN	4'-9"
①	CT1	4	#4	BNT.	AS SHOWN	2'-11½" AVG.
①	ET1	84	#4	BNT.	AS SHOWN	5'-7" AVG.
	ET2	4	#4	BNT.	AS SHOWN	8'-1"
	ET3	4	#4	BNT.	AS SHOWN	7'-11"
	ET4	4	#4	BNT.	AS SHOWN	5'-6"
	ET5	4	#4	BNT.	AS SHOWN	5'-4"
	ET6	4	#4	BNT.	AS SHOWN	2'-3"
	WD1	10	#7	BNT.	12" C/C	8'-4"

APRON

	MARK	NO.	SIZE	FORM	SPACING	LENGTH
	AC	4	#4	BNT.	AS SHOWN	3'-8"
	AD1	4	#4	STR.	AS SHOWN	22'-2"
	AL1	44	#4	STR.	12" C/C	20'-5"
①	AL2	36	#4	STR.	12" C/C	9'-5" AVG.
	AT1	4	#4	STR.	AS SHOWN	38'-0"
①	AT2	18	#4	STR.	12" C/C	27'-8" AVG.
①	AT3	18	#5	STR.	12" C/C	27'-8" AVG.
	CH	4	#4	STR.	AS SHOWN	18'-2"
	CL1	22	#4	BNT.	12" C/C	4'-4"
	CL2	22	#4	BNT.	12" C/C	4'-3"
	CW1	78	#5	STR.	12" C/C	6'-5"
	CW2	12	#4	STR.	12" C/C	38'-0"
	CW3	78	#5	BNT.	12" C/C	4'-0"
	WH1	8	#4	STR.	12" C/C	20'-2"
①	WH2	20	#4	STR.	12" C/C	11'-6½" AVG.
	WH3	4	#5	BNT.	AS SHOWN	20'-6"
	WL1	34	#5	BNT.	AS SHOWN	6'-1"
①	WL2	12	#5	BNT.	12" C/C	5'-0½" AVG.
	WT1	32	#4	BNT.	AS SHOWN	3'-6"
	WT2	4	#4	STR.	AS SHOWN	6'-0"
①	WT3	28	#4	STR.	12" C/C	4'-4½" AVG.
①	WT4	12	#4	BNT.	12" C/C	5'-8½" AVG.
	WV1	2	#5	STR.	AS SHOWN	6'-0"
①	WV2	28	#5	STR.	12" C/C	4'-4½" AVG.
	U1	2	#4	BNT.	AS SHOWN	5'-4"

① LENGTH VARIES:

CT1 - 1'-9" TO 4'-2"
ET1 - 2'-3" TO 8'-11"

AL2 - 2'-6" TO 16'-4"
AT2 - 17'-10" TO 37'-6"
AT3 - 17'-10" TO 37'-6"
WH2 - 4'-5" TO 18'-8"
WL2 - 4'-6" TO 5'-7"
WT3 - 3'-0" TO 5'-9"
WT4 - 5'-2" TO 6'-3"
WV2 - 3'-0" TO 5'-9"

*FINAL LENGTH TO BE DETERMINED IN FIELD.

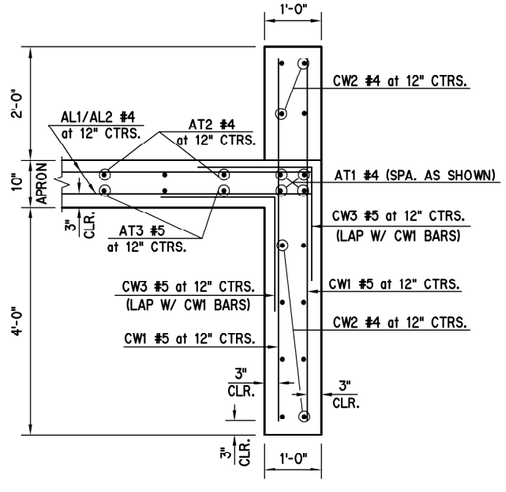

SECTION C-C
TYPICAL SECTION THRU CURTAIN WALL

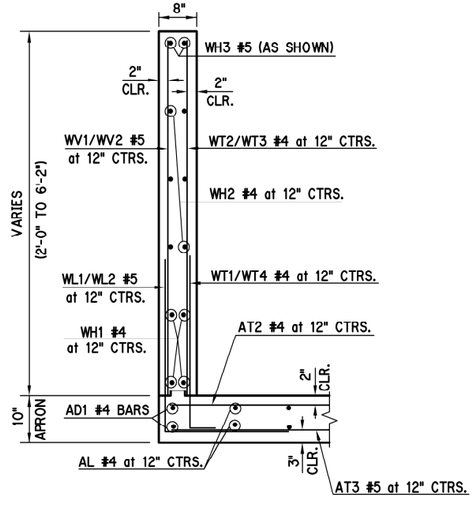

SECTION D-D
TYPICAL SECTION THRU WINGWALL AND APRON

OKLAHOMA COUNTY

Design		
Drawn		
Checked		
Approved		
Squad	POE	

STRUCTURE 'CD1'

R.C.B. EXTENSION DETAILS
(SHEET 3 OF 3)

State Job No. 09032(17) Sheet No. 109C

SEPT 07, 2016 - 14:27:30
H:\PROJECTS\2789_CrossRoads_InterX_New\PHASE 1A\Bridge\CADDrawings\1A-DrainStructures\PHASE 1A - RCB EXT DETS.DWG

REVISIONS	
DESCRIPTION	DATE
2 REVISED TYP. SECTION	07/15/04

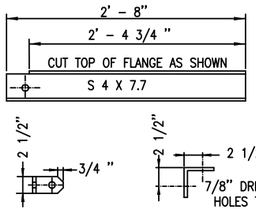

4"x4"x3/8"x2 1/2" CONNECTION CLIPS

1 – S 4 x 7.7 and 2 – 4"x4"x 3/8"x2 1/2" CONNECTION CLIPS FOR AND DES. 2 CONFIGURATION

3 – S 4 x 7.7 and 6 – 4"x4"x3/8"x2 1/2" CONNECTION CLIPS FOR ANY DES. 3 CONFIGURATION

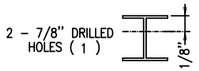

W6 x 15 x 5'–10 1/4" FOR ANY DES. 2 CONFIGURATION
W6 x 15 x 6'–8 1/2" FOR ANY DES. 3 CONFIGURATION
(1) LOWER DRILLED HOLES 3/8" WHEN STRUCTURE IS BUILT ON A CURVED CURB. FOR PLATE DETAILS, SEE STD. SSIF–4

■ ALL REBAR 1/2" DIA. @9" C/C TRANS. & LONG. FOR TOP & BOTTOM SLABS

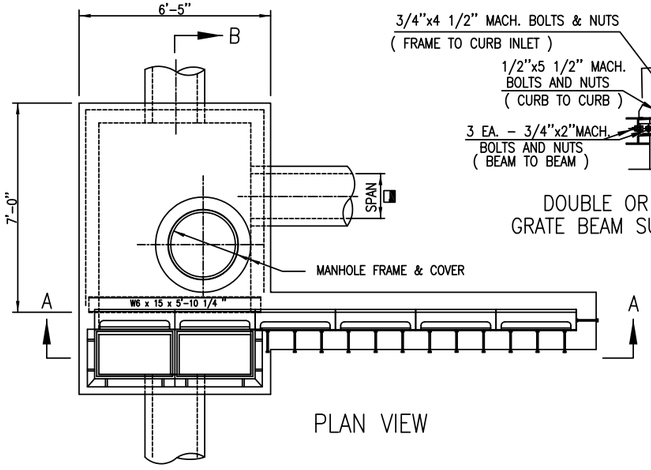

PLAN VIEW

DOUBLE OR MULTIPLE GRATE BEAM SUPPORT DETAIL

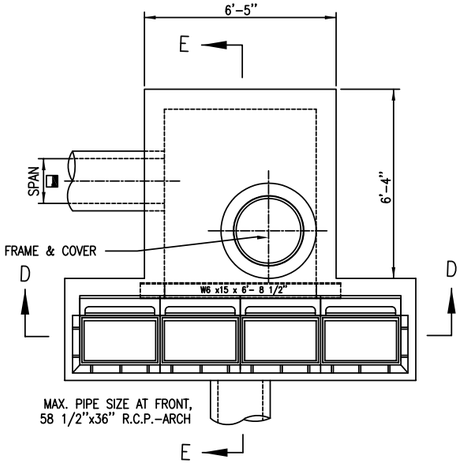

PLAN VIEW

GENERAL NOTES

1. ALL CONSTRUCTION AND MATERIALS SHALL BE IN ACCORDANCE WITH THE 2009 STANDARD SPECIFICATIONS.
2. STANDARD SSIF–4 FRAMES AND STANDARD CIG–3 GRATES TO BE USED WITH THESE INLETS UNLESS OTHERWISE SPECIFIED.
3. WHEN THE INLET IS BUILT IN NEW CONCRETE PAVEMENT, THE APRON AROUND THE INLET MAYBE BUILT INTEGRAL WITH PAVEMENT, OR SEPARATELY. THE THICKNESS SHALL BE THE SAME AS THE CONCRETE PAVEMENT OR CURB AND GUTTER. IF CONSTRUCTED IN ANY OTHER AREA OR IN EXISTING PAVEMENT, THE APRON AROUND THE INLET SHALL BE BUILT OF P.C. CONCRETE TO A MINIMUM 8 INCH THICKNESS.
4. THERE WILL BE NO DEDUCTION OF PAYMENT FOR CONCRETE CURB AND GUTTER OR P.C. CONCRETE THRU THE EXTENTS OF THE CAST IRON CURB INLETS. DEDUCTION WILL BE MADE FOR PAYMENT ON INTEGRAL CURB THRU THE EXTENTS OF THE CAST IRON CURB INLETS.
5. ALL LETTERING ON CAST IRON ITEMS TO BE RECESSED 1/16 INCH AND SHALL NOT EXCEED 1 INCH IN HEIGHT. INFORMATION REQUIRED AS WELL AS ACCEPTABLE LOCATION SHALL BE AS STATED IN THE SPECIFICATIONS.
6. BOLTS WITH EXPANSION DEVICES OR EPOXY TYPE PUTTY TO BE USED TO INSTALL CURB INLETS INTO CONCRETE CURB. COST OF INSTALLATION TO BE INCLUDED IN PRICE BID FOR CAST IRON CURB INLET.
7. CASTING AS SHOWN HERE SHALL BE CAST STEEL, DUCTILE IRON, OR GRAY CONFORMING TO SECTION 725 OF THE 2009 STANDARD SPECIFICATIONS. REFER TO STANDARD CI–1 FOR TYPES OF CAST IRON CURB INLETS, DETAIL OF CONNECTION ANGLE IRON & CAST IRON CURB AND DETAIL OF CONNECTION FRAME & CAST IRON CURB.
8. REFER TO STANDARD SBI–1 FOR UNCLASSIFIED EXCAVATION AND STRUCTURAL EXCAVATION.
   REFER TO STANDARD MFC–4 FOR DETAILS OF FRAME AND COVER.

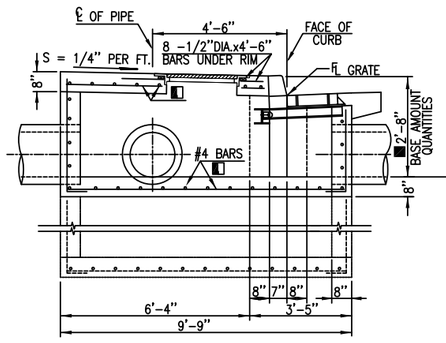

SECTION B–B

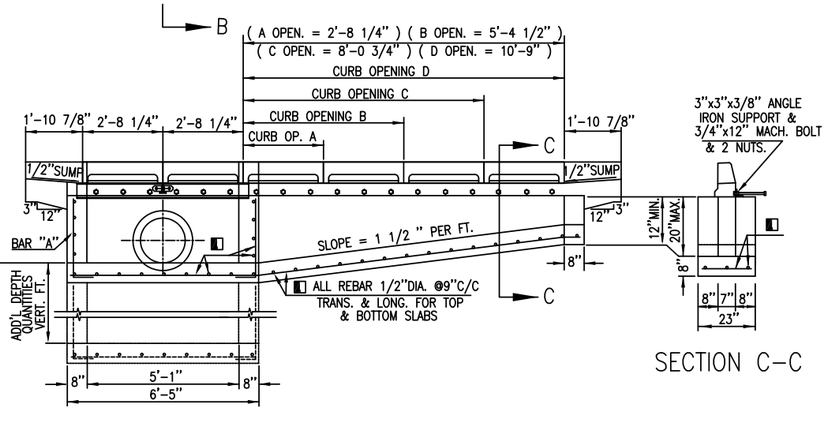

SECTION A–A

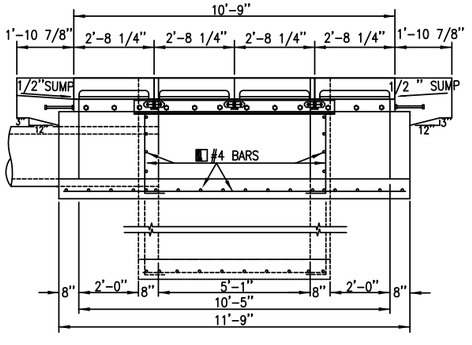

SECTION D–D

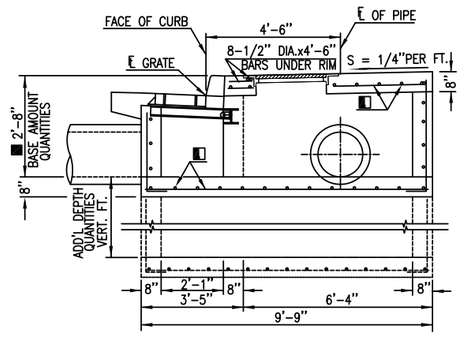

SECTION E–E

DESIGN 2 – DOUBLE GRATE

○ QUANTITIES SHOWN INCLUDE QUANTITIES REQUIRED TO CONSTRUCT GRATED CURB INLET AND ADDITIONAL CURB OPENINGS. INLET QUANTITIES FOR DEPTHS GREATER THAN 2'–8" (℄ GRATE TO ℄ INLET) WILL BE MULTIPLIED BE THE ADD'L CU. YD. PER VERT. FT. AMOUNT AND ADDED TO THE BASE AMOUNT. LEADS LARGER THAN 18" TO BE DEDUCTED FROM INLET QUANTITIES.

▲ QUANTITIES SHOWN ARE FOR 2 DOUBLE GRATE INLETS.

■ STANDARD INLET DEPTH	
INLET W/SMALL JUNCTION BOX	2'–8" FOR 18" R.C.P. & 28 1/2"x18" REINF. CONC. ARCH PIPE 3'–2" FOR 24" R.C.P. & 36 1/4"x22 1/2" REINF. CONC. ARCH PIPE 3'–8" FOR 30" R.C.P. & 43 3/4"x26 5/8" REINF. CONC. ARCH PIPE 4'–2" FOR 36" R.C.P. & 58 1/2"x36" REINF. CONC. ARCH PIPE
W/LARGE JUNC. BOX	4'–8" FOR 42" R.C.P. 5'–2" FOR 48" R.C.P.
◨ MAX. PIPE SIZE AT UPSTREAM SIDE OR WITH ADDITIONAL CURB OPENINGS, 58 1/2"x36" R.C.P.–ARCH	

QUANTITIES (FOR 18" RCP MIN. DEPTH)◎

	INLET DESIGN	CURB OPEN DESIGNATION	CLASS "A" CONCRETE BASE AMOUNT C.Y.	CLASS "A" CONCRETE ADD'L CY PER VERT. FT. C.Y.	REINF. STEEL LBS.	STR. EXC. C.Y.	INLET FRAME & GRATE EACH	CAST IRON CURB INLET EACH	ANGLE IRON NO.	ANGLE IRON LENGTH	
	2		4.45	0.73	213.60	2.32	2	2			
	2	A	4.85	0.87	227.07	2.52	2	3	1	2'–5 3/8"	
	2	B	5.20	1.01	240.25	2.71	2	4	1	5'–1 5/8"	
	2	C	5.51	1.14	251.48	2.90	2	5	1	7'–9 7/8"	
	2	D	5.83	1.27	264.66	3.09	2	6	1	10'–6 1/8"	
	2	2A	5.26	1.00	240.54	2.72	2	4	2	2'–5 3/8"	2'–5 3/8"
	2	A–B	5.61	1.14	253.72	2.91	2	5	2	2'–5 3/8"	5'–1 5/8"
	2	A–C	5.92	1.27	264.95	3.10	2	6	2	2'–5 3/8"	7'–9 7/8"
	2	2B	5.96	1.28	266.90	3.10	2	6	2	5'–1 5/8"	5'–1 5/8"
	2	B–C	6.27	1.41	278.13	3.29	2	7	2	5'–1 5/8"	7'–9 7/8"
	2	B–D	6.59	1.54	291.31	3.48	2	8	2	5'–1 5/8"	10'–6 1/8"
	2	2D	7.22	1.80	315.72	3.86	2	10	2	10'–6 1/8"	10'–6 1/8"
▲	3		5.81	1.10	247.14	2.99	4	4			
▲	3	B	6.57	1.38	290.12	3.38	4	6	1	5'–1 5/8"	
▲	3	D	7.20	1.64	318.12	3.76	4	8	1	10'–6 1/8"	
▲	3	2–B	7.33	1.66	333.10	3.77	4	8	2	5'–1 5/8"	5'–1 5/8"
▲	3	B–D	7.96	1.92	361.10	4.15	4	10	2	5'–1 5/8"	10'–6 1/8"
▲	3	2–D	8.59	2.18	389.10	4.53	4	12	2	10'–6 1/8"	10'–6 1/8"

DESIGN 3 – MULTI GRATE

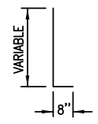

BAR "A" ◧

◧ QUANTITIES FOR BAR "A" ARE INCLUDED ON THE SUMMARY OF DRAINAGE STRUCTURES AS REINFORCING STEEL IF STEEL IS NOT INCLUDED WITH PAYMENT FOR THE INLET.

BASIS OF PAYMENT

	ITEM NO.	ITEM	UNIT
	202 (C)	UNCLASSIFIED EXCAVATION	CU. YD.
	501 (A)	STRUCTURAL EXCAVATION, UNCLASSIFIED	CU. YD.
✳	509 (C)	CLASS A CONCRETE FOR SMALL STRUCTURES	CU. YD.
	511 (A)	REINFORCING STEEL	LB.
	611 (D)	MANHOLE FRAME AND COVER	EA.
	611 (G)	INLET FRAME AND GRATE	EA.
	611 (K)	CAST IRON CURB INLET	EA.
	611 (E)	INLET W/SMALL JUNCTION BOX (◧)	EA.
	611 (E)	INLET W/LARGE JUNCTION BOX (◧)	EA.
	611 (F)	INLET W/SMALL JUNCTION BOX (◪) ADD'L DEPTH	V.F.
	611 (F)	INLET W/LARGE JUNCTION BOX (◪) ADD'L DEPTH	V.F.

✳ FOR QUANTITIES OF CLASS A CONCRETE LESS THAN 10.0 C.Y.
◧ INLET DESIGN NO. (FULL DESCRIPTION) SHALL BE SPECIFIED, I.E. DESIGN 2(2B) or 3(B–D)
◪ INLET DESIGN NO. SHALL BE SPECIFIED, I.E. DESIGN 2 OR 3

Design		
Drawn		
Checked		
Approved		
Squad		

DETAIL STR. G27
SPECIAL CICI–JUNCTION BOX CICI DESIGN 2 & 3

(JB–2) PROJECT 09032(17) SHEET NO 110

SEPT 08, 2016 - 11:52:25
H:\PROJECTS\2789__CrossRoads__InterX__New\PHASE IA\Roadway\Drawings\2789-PHASE1A__DETAIL SHEET__CIJB1.DWG

REVISIONS		
DESCRIPTION		DATE

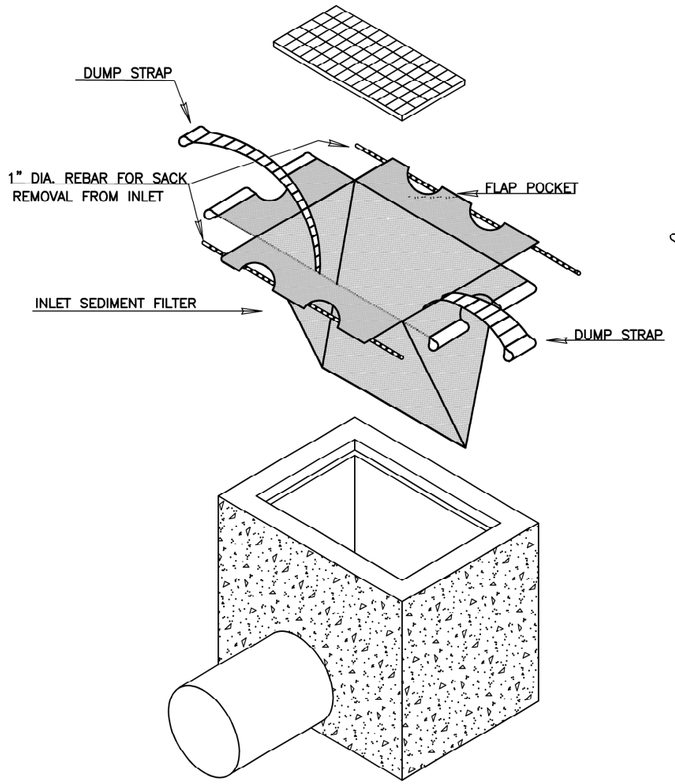

INSTALLATION DETAIL

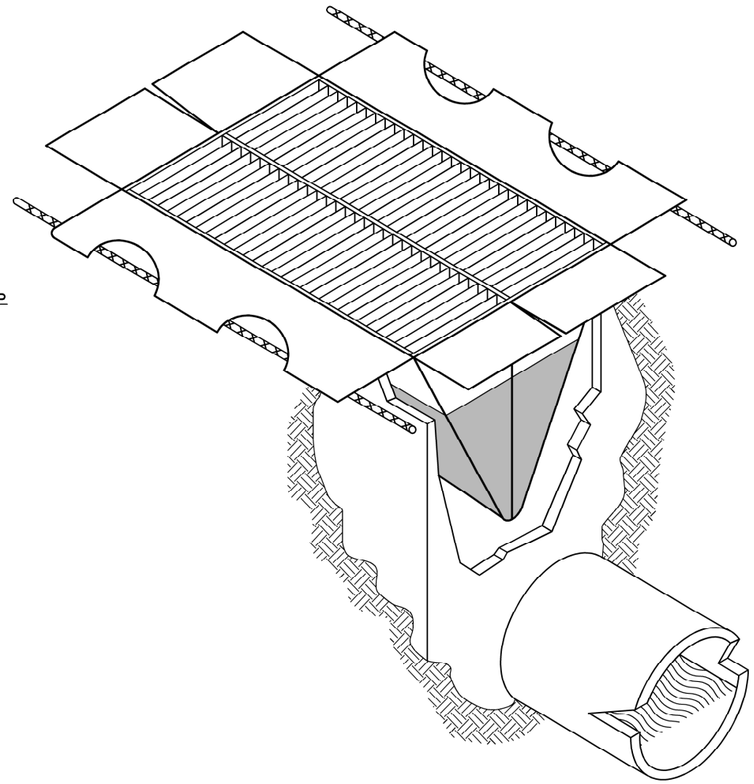

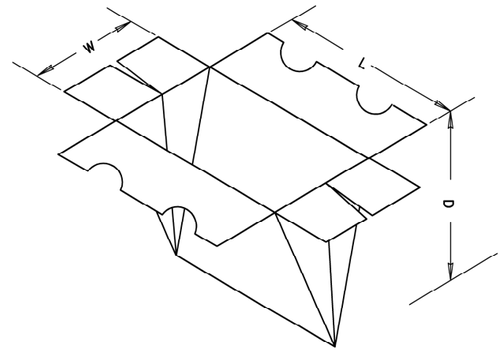

GENERAL NOTES

AN INLET SEDIMENT FILTER IS A WOVEN, POLYPROPLENE SACK PLACED INTO UNDERGROUND DRAINS DESIGNED TO TRAP SEDIMENT BEFORE IT ENTERS THE DRAINAGE SYSTEM. THE FILTER HAS FLAP POCKETS ALONG THE TOP EDGES AND DUMP STRAPS ATTACHED TO THE BOTTOM THAT REMAIN ABOVE THE GROUND AND ARE HELD IN PLACE BY THE GRATE. THE FILTER MUST NEVER BE ALLOWED TO BE OVER HALF FULL OF SEDIMENT OR THE DRAINAGE SYSTEM COULD BE POLLUTED, NOT FUNCTION AT ALL OR MAKE IT VERY DIFFICULT TO REMOVE. CONSEQUENTLY, REGULAR MAINTENANCE IS MANDATORY.

WHEN IT IS DETERMINED THAT THE FILTER NEEDS TO BE CLEANED, TWO PIECES OF 1" REBAR ARE INSERTED THROUGH THE FLAP POCKETS. THE GRATE IS REMOVED AND THE LIFTING BARS ARE ATTACHED TO AVAILABLE EQUIPMENT AND THE SEDIMENT FILTER IS REMOVED TO A DUMPING AREA. ONCE THE INLET SEDIMENT FILTER IS ON THE GROUND, REMOVE THE REMOVE THE LIFTING ARS FROM THE FLAT POCKETS AND INSET THE LIFTING BARS THROUGH THE DUMP STRAPS. LIFT THE FILTER OFF THE GROUND BY THE DUMP STRAPS AND THE FILTER WILL TURN INSIDE OUT AND BE EMPTIED. IT MAY THEN BE RINSED AND REUSED OR DISPOSED OF AND REPLACED WITH A NEW INLET SEDIMENT FILTER.

THE GEOTEXTILE FABRIC SHALL BE WOVEN WITH THE FOLLOWING PROPERTIES:

PROPERTY	TEST METHOD	TEST RESULT
GRAB TENSILE	ASTM D-4632	300 lb (Min.)
GRAB ELONGATION	ASTM D-4632	20% (Max.)
PUNCTURE	ASTM D-4833	120 lb (Min.)
MULLEN BURST	ASTM D-3786	800 psi (Min.)
TRAPEZOID TEAR	ASTM D-4533	120 lb (Min.)
UV RESISTANCE	ASTM D-4355	70% @ 150hrs. (Min.)
APPARENT OPENING SIZE	ASTM D-4751	40 US SIEVE (Max.)
FLOW RATE	ASTM D-4491	40 Gal./min./sq.ft. (Max.)
PERMITTIVITY	ASTM D-4491	0.55 sec.$^{-1}$(Max.)

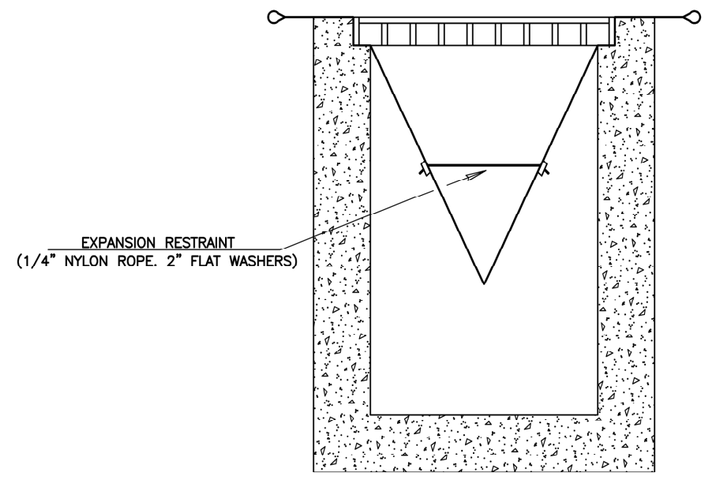

SIDE VIEW

SYMBOLOGY

SYMBOL TO BE USED TO DENOTE DEVICE ON PLANS.

ISF

BASIS OF PAYMENT

ITEM NO.	ITEM	UNIT
221(H)	(PL) TEMPORARY INLET SEDIMENT FILTER	EACH

DESIGN		
DRAWN		
CHECKED		
APPROVED		
SQUAD	POE	

TEMPORARY INLET SEDIMENT FILTER

STATE JOB NO. 09032(17) SHEET NO. 111

SEPT 08, 2016 - 11:57:19
H:\PROJECTS\2789_CrossRoads_InterX_NewPHASE IA\Roadway\Drawings\2789_TEMP_SEDIMENT_FILTER.DWG

REVISIONS		
NO.	DESCRIPTION	DATE

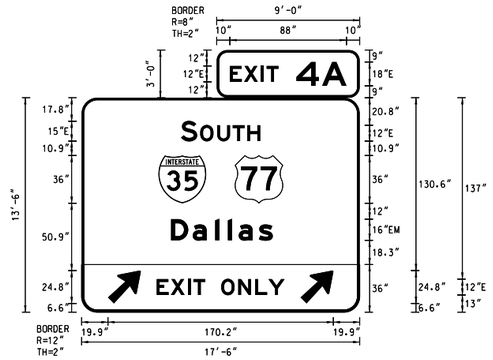

SIGN NUMBER	**SPECIAL SIGN NO. 1**
WIDTH x HGHT.	**17'-6" x 13'-6"**
BORDER WIDTH	**2"**
CORNER RADIUS	**8"**
MOUNTING	**Overhead**
SIGN AREA	**263.3 Sq.Ft.**
BACKGROUND	TYPE: **Reflective**
	COLOR: **Green**
LEGEND&BORDER	TYPE: **Reflective**
	COLOR: **Black/White**

SYMBOL	X	Y	WID	HT
M1_1	**58.1**	**82.3**	**36**	**36**
M1_4	**115.9**	**82.3**	**36**	**36**
AR_Type A	**19.9**	**6.6**	**20**	**31.5**
AR_Type A	**165.3**	**6.6**	**20**	**31.5**

Dimensions are In **inches.tenths**

Letter locations are panel edge to lower left corner

LETTER POSITIONS (X)

																				LENGTH	SERIES-SIZE
E	**X**	**I**	**T**																		**E 2000**
10	**20.7**	**33.5**	**37.7**																	**36.7**	
4	**A**																				**E 2000**
60.2	**79.7**																			**37.8**	
S	**O**	**U**	**T**	**H**																	**E 2000**
75.1	**89.5**	**102.4**	**114.1**	**125.2**																**59.8**	
D	**a**	**l**	**l**	**a**	**s**																**EM 2000**
67.6	**83.9**	**100.9**	**110.5**	**118.6**	**133.8**															**76.8**	
E	**X**	**I**	**T**		**O**	**N**	**L**	**Y**													**E 2000**
56.7	**67.4**	**80.2**	**84.4**	**93.4**	**105.4**	**118.3**	**131.1**	**141.1**												**96.6**	

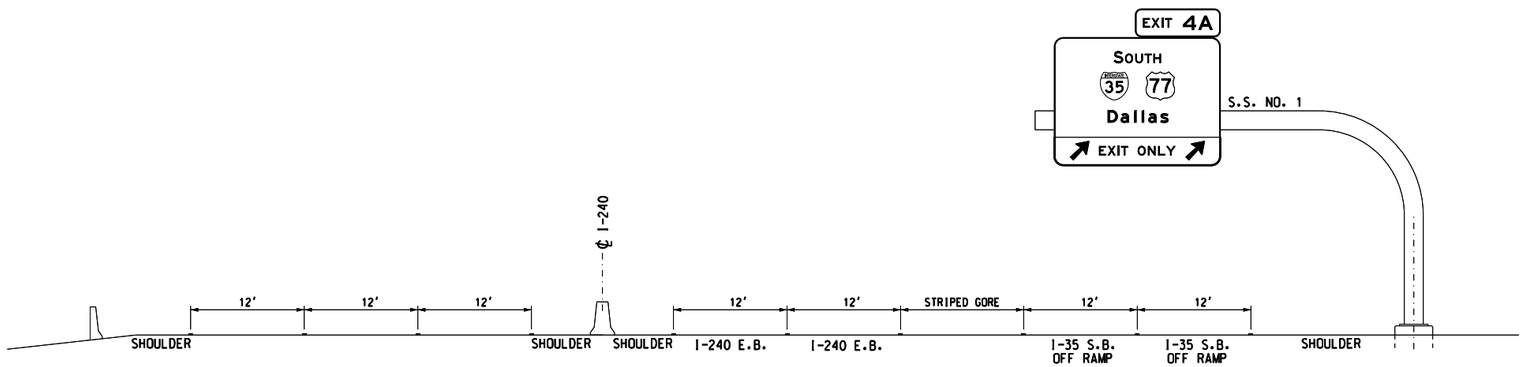

SIGN STRUCTURE NO. 1
℄ I-240 EAST BOUND
(323.00 S.F.)

R. WAYNE RUSSELL, P.E. # 16030
C.A. # 1160, RENEWAL 06-30-17

9-8-16
DATE

REGISTERED PROFESSIONAL ENGINEER
R. WAYNE RUSSELL
16030
OKLAHOMA

Traffic Engineering Consultants, Inc.
6000 S. Western, Suite 300 - Oklahoma City, OK 73139,
Ph: 405-720-7721, Fax: 405-720-9848, Web: www.tecok.com

Design	RWR	9/8/2016
Drawn	CCC	9/8/2016

TEC
A CLEAR DIRECTION

SPECIAL SIGN NO. 1 AND SIGN STRUCTURE DETAIL

State Job No. 09032(17) Sheet No. 112

OKLAHOMA COUNTY

9/8/2016 G:\0Projects\T-2457A I-240-I-35 Phase IA\CAD\SP SIGN DET 1.dgn

REVISIONS		
NO.	DESCRIPTION	DATE

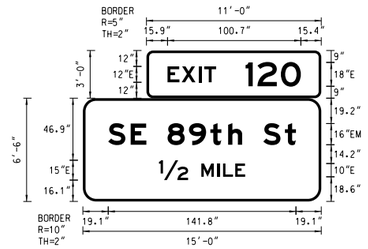

SIGN NUMBER	**SPECIAL SIGN NO. 2**			
WIDTH x HGHT.	**15'-0" x 6'-6"**			
BORDER WIDTH	**2"**			
CORNER RADIUS	**5"**			
MOUNTING	**Overhead**			
SIGN AREA	**130.5 Sq.Ft.**			
BACKGROUND	TYPE: **Reflective**			
	COLOR: **Green**			
LEGEND&BORDER	TYPE: **Reflective**			
	COLOR: **White**			

SYMBOL	X	Y	WID	HT

Dimensions are In **Inches.tenths** **Letter locations are panel edge to lower left corner**

LETTER POSITIONS (X)

																					LENGTH	SERIES-SIZE
E	X	I	T																			E 2000
15.9	26.6	39.4	43.6																		36.7	
1	2	0																				E 2000
74.8	83.8	101.5																			41.8	
S	E		8	9	t	h		S	t													EM 2000
19.1	36.1	47.9	63.9	80.1	96.2	109.7	120.2	136.2	152.6												141.8	
1/2	M	I	L	E																		E 2000
57.5	89.4	101.4	105.8	115																	65.1	

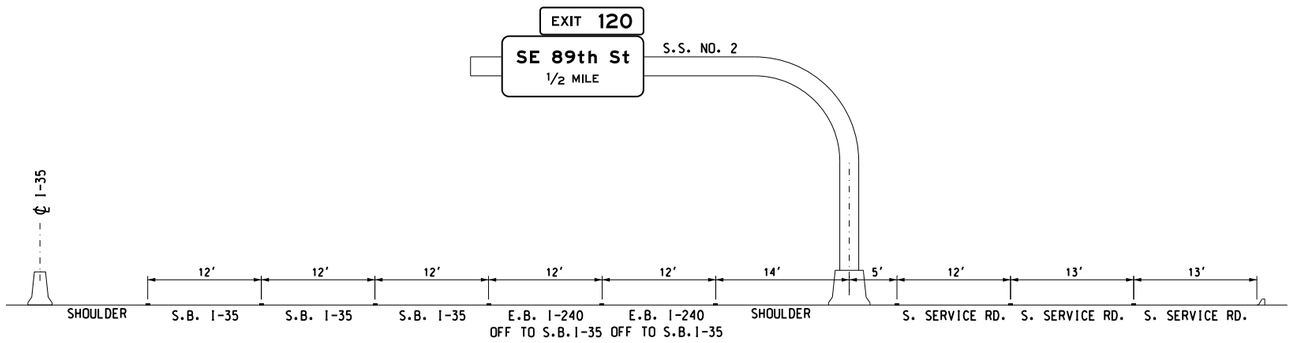

SIGN STRUCTURE NO. 2
℄ RAMP "G"
(130.50 S.F.)

R. WAYNE RUSSELL, P.E. # 16030
C.A. # 1160, RENEWAL 06-30-17

9-8-16
DATE

REGISTERED PROFESSIONAL ENGINEER
R. WAYNE RUSSELL
16030
OKLAHOMA

Traffic Engineering Consultants, Inc.
6000 S. Western, Suite 300 - Oklahoma City, OK 73139,
Ph: 405-720-7721, Fax: 405-720-9848, Web: www.tecok.com

Design	RWR	9/8/2016
Drawn	CCC	9/8/2016

TEC A CLEAR DIRECTION

SPECIAL SIGN NO. 2 AND SIGN STRUCTURE DETAIL

State Job No. 09032(17) Sheet No. 113

OKLAHOMA COUNTY

9/8/2016 G:\0Projects\T-2457A I-240-I-35 Phase IA\CAD\SP SIGN DET 2.dgn

REVISIONS		
NO.	DESCRIPTION	DATE

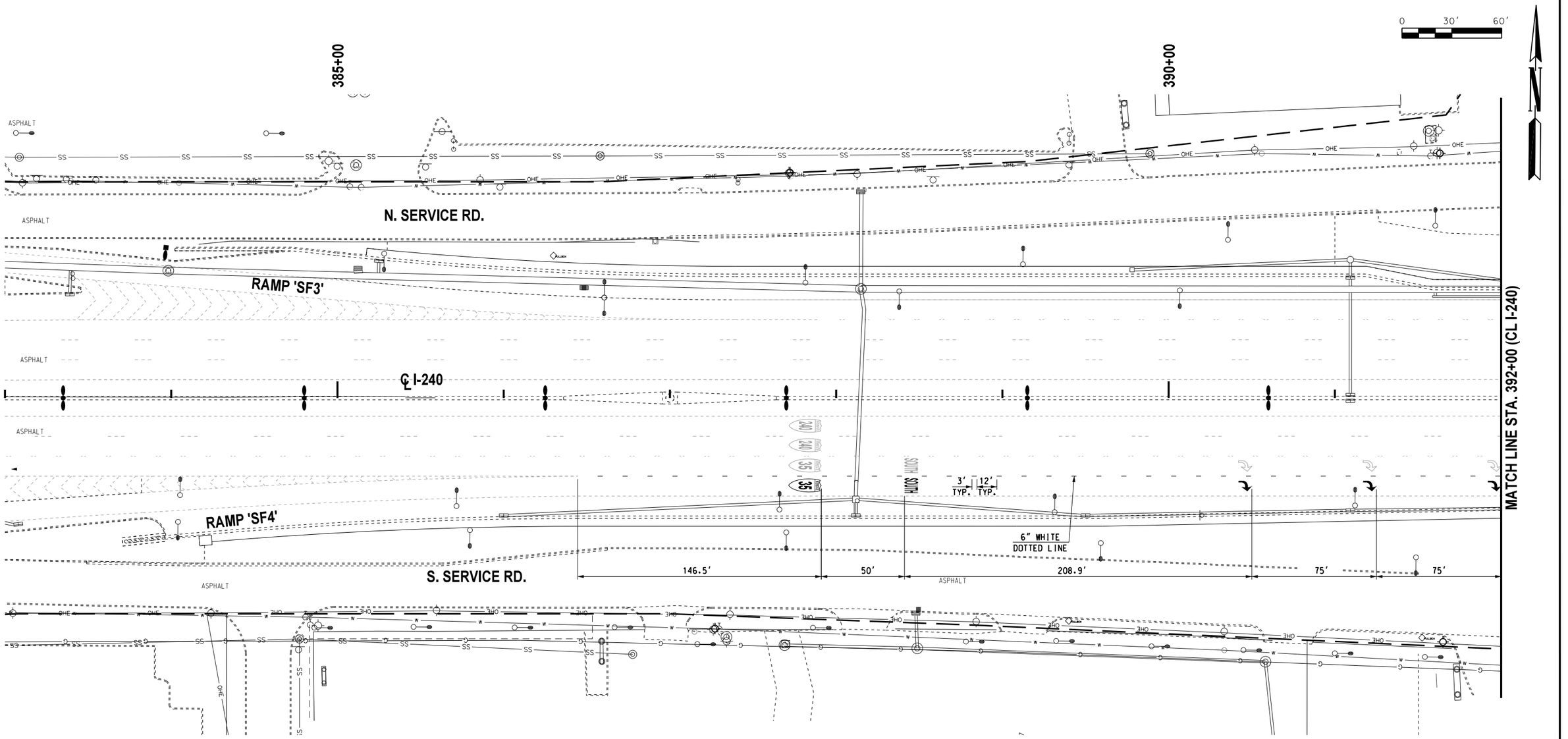

MULTI- POLY STRIPING SUM. TABLE

DESCRIPTION	UNIT	TOTALS
TRAFFIC STRIPE (MULI-POLY) 4" WHITE	L.F.	0
TRAFFIC STRIPE (MULI-POLY) 4" YELLOW	L.F.	0
TRAFFIC STRIPE (MULI-POLY) 6" WHITE	L.F.	115
TRAFFIC STRIPE (MULI-POLY) 6" YELLOW	L.F.	0
TRAFFIC STRIPE (MULI-POLY) 6" BLACK	L.F.	0
TRAFFIC STRIPE (MULI-POLY) 8" WHITE	L.F.	0
TRAFFIC STRIPE (MULI-POLY) 8" YELLOW	L.F.	0
TRAFFIC STRIPE (MULI-POLY) 12" WHITE	L.F.	0
TRAFFIC STRIPE (MULI-POLY) 12" YELLOW	L.F.	0
TRAFFIC STRIPE (MULI-POLY) 24" WHITE	L.F.	0
TRAFFIC STRIPE (MULI-POLY) ARROWS	EA.	3
TRAFFIC STRIPE (MULI-POLY) WORDS	EA.	1
TRAFFIC STRIPE (MULI-POLY) SYMBOLS	EA.	1

R. WAYNE RUSSELL, P.E. # 16030
C.A. # 1160, RENEWAL 06-30-17

9-8-16
DATE

Traffic Engineering Consultants, Inc.
6000 S. Western, Suite 300 - Oklahoma City, OK 73139,
Ph: 405-720-7721, Fax: 405-720-9848, Web: www.tecok.com

REGISTERED PROFESSIONAL ENGINEER — R. WAYNE RUSSELL — 16030 — OKLAHOMA

Design	RWR	9/8/2016
Drawn	CCC	9/8/2016

TEC — A CLEAR DIRECTION

SIGNING AND STRIPING
STA. 383+00 TO 392+00 (CL I-240)
(1 OF 8)

State Job No. 09032(17) Sheet No. 114

OKLAHOMA COUNTY

9/8/2016 G:\OP\Projects\1-2457A I-240-I-35 Phase IA\CAD\STRIPE 1.dgn

REVISIONS		
NO.	DESCRIPTION	DATE

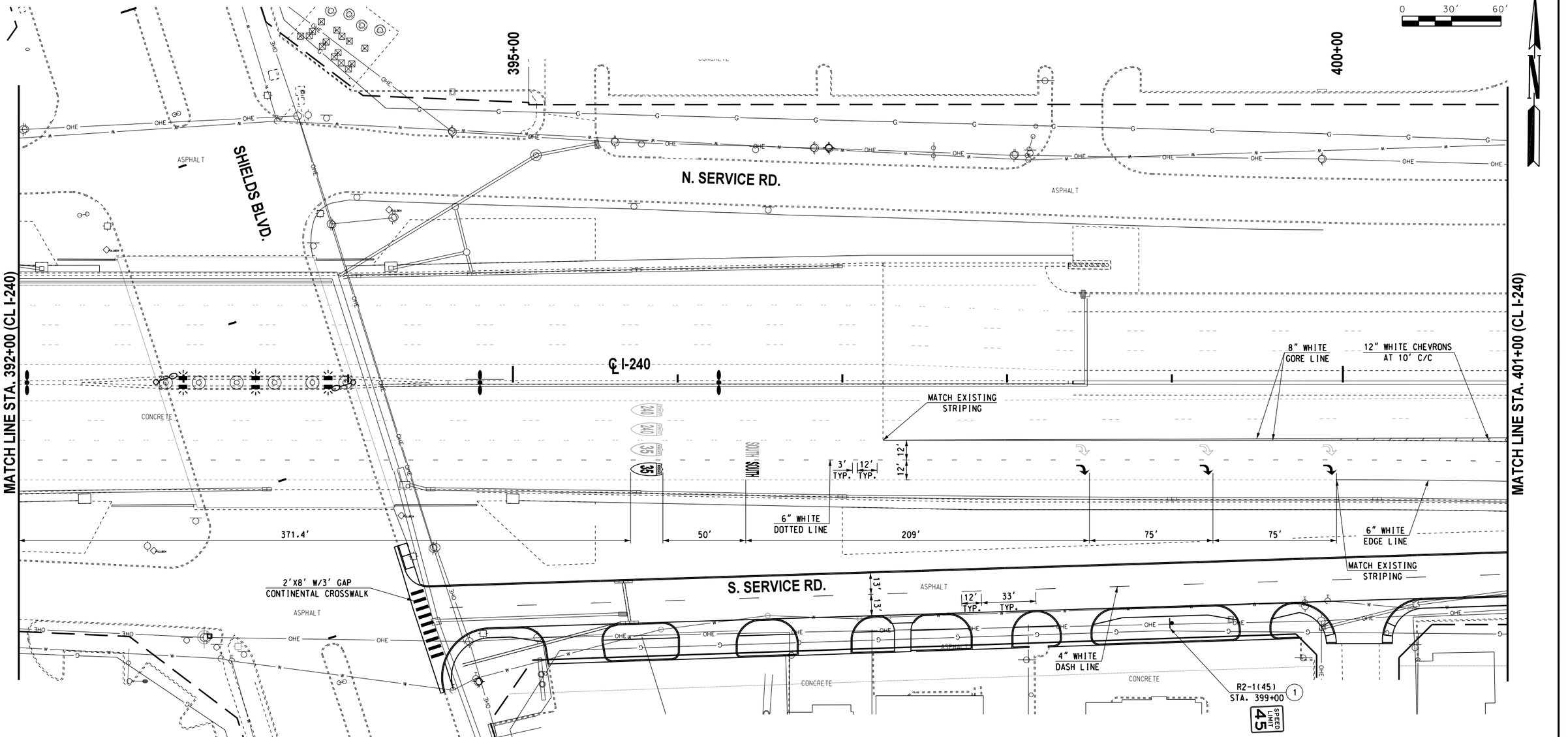

MULTI-POLY STRIPING SUM. TABLE

DESCRIPTION	UNIT	TOTALS
TRAFFIC STRIPE (MULI-POLY) 4" WHITE	L.F.	180
TRAFFIC STRIPE (MULI-POLY) 4" YELLOW	L.F.	0
TRAFFIC STRIPE (MULI-POLY) 6" WHITE	L.F.	180
TRAFFIC STRIPE (MULI-POLY) 6" YELLOW	L.F.	0
TRAFFIC STRIPE (MULI-POLY) 6" BLACK	L.F.	0
TRAFFIC STRIPE (MULI-POLY) 8" WHITE	L.F.	760
TRAFFIC STRIPE (MULI-POLY) 8" YELLOW	L.F.	0
TRAFFIC STRIPE (MULI-POLY) 12" WHITE	L.F.	0
TRAFFIC STRIPE (MULI-POLY) 12" YELLOW	L.F.	0
TRAFFIC STRIPE (MULI-POLY) 24" WHITE	L.F.	72
TRAFFIC STRIPE (MULI-POLY) ARROWS	EA.	3
TRAFFIC STRIPE (MULI-POLY) WORDS	EA.	1
TRAFFIC STRIPE (MULI-POLY) SYMBOLS	EA.	1

R. WAYNE RUSSELL, P.E. # 16030
C.A. # 1160, RENEWAL 06-30-17

9-8-16
DATE

Traffic Engineering Consultants, Inc.
6000 S. Western, Suite 300 - Oklahoma City, OK 73139,
Ph: 405-720-7721, Fax: 405-720-9848, Web: www.tecok.com

REGISTERED PROFESSIONAL ENGINEER — R. WAYNE RUSSELL — 16030 — OKLAHOMA

Design	RWR	9/8/2016
Drawn	CCC	9/8/2016

TEC — A CLEAR DIRECTION

SIGNING AND STRIPING
STA. 392+00 TO 401+00 (CL I-240)
(2 OF 8)

State Job No. 09032(17) Sheet No. 115

OKLAHOMA COUNTY

9/8/2016 G:\0IProjects\1-2457A I-240-I-35 Phase IA\CAD\STRIPE 2.dgn

REVISIONS		
NO.	DESCRIPTION	DATE

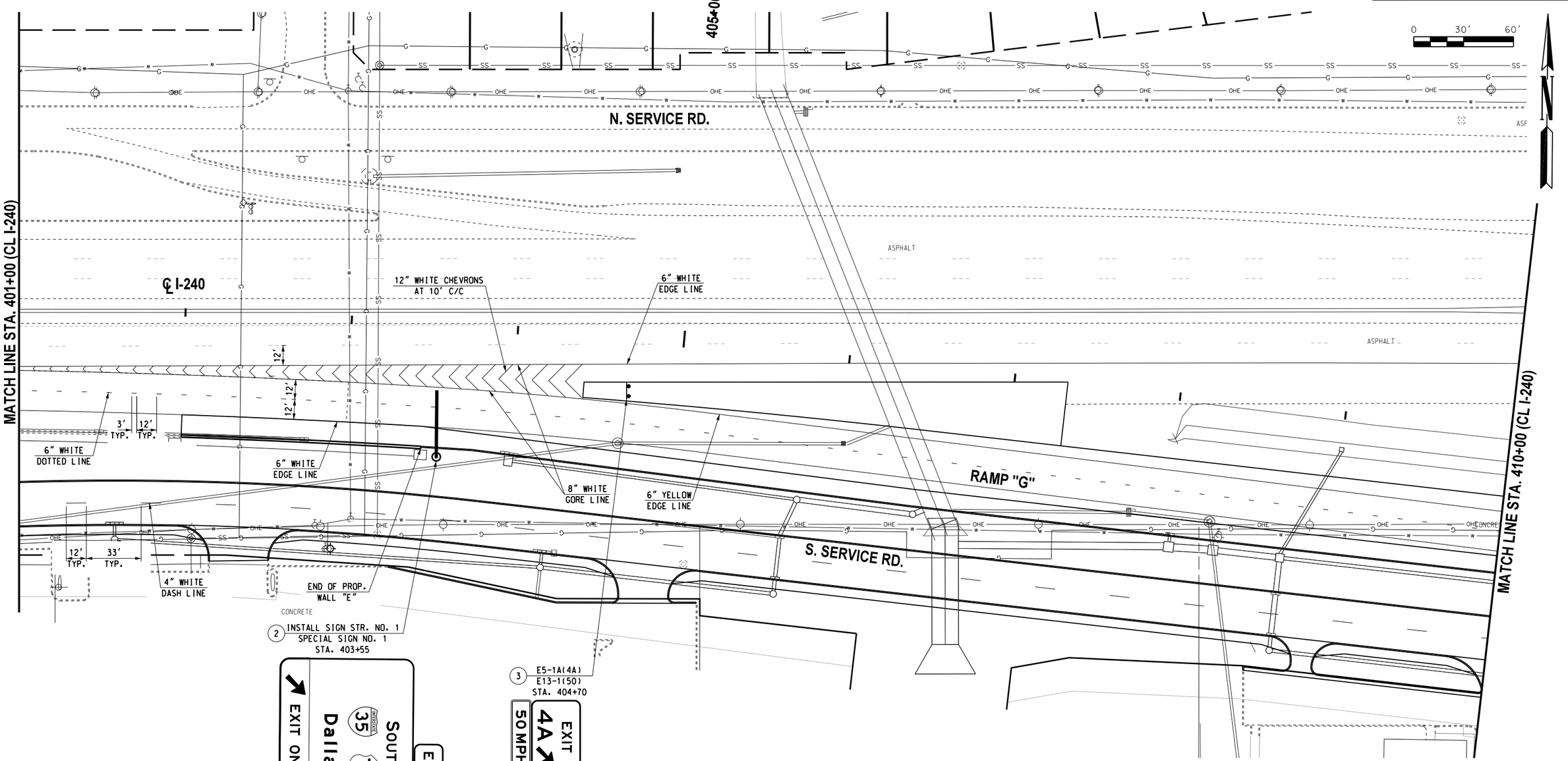

MULTI-POLY STRIPING SUM. TABLE

DESCRIPTION	UNIT	TOTALS
TRAFFIC STRIPE (MULI-POLY) 4" WHITE	L.F.	240
TRAFFIC STRIPE (MULI-POLY) 4" YELLOW	L.F.	0
TRAFFIC STRIPE (MULI-POLY) 6" WHITE	L.F.	1635
TRAFFIC STRIPE (MULI-POLY) 6" YELLOW	L.F.	560
TRAFFIC STRIPE (MULI-POLY) 6" BLACK	L.F.	0
TRAFFIC STRIPE (MULI-POLY) 8" WHITE	L.F.	680
TRAFFIC STRIPE (MULI-POLY) 8" YELLOW	L.F.	0
TRAFFIC STRIPE (MULI-POLY) 12" WHITE	L.F.	0
TRAFFIC STRIPE (MULI-POLY) 12" YELLOW	L.F.	0
TRAFFIC STRIPE (MULI-POLY) 24" WHITE	L.F.	0
TRAFFIC STRIPE (MULI-POLY) ARROWS	EA.	0
TRAFFIC STRIPE (MULI-POLY) WORDS	EA.	0
TRAFFIC STRIPE (MULI-POLY) SYMBOLS	EA.	0

R. WAYNE RUSSELL, P.E. # 16030
C.A. # 1160, RENEWAL 06-30-17
9-8-16
DATE
Traffic Engineering Consultants, Inc.
6000 S. Western, Suite 300 - Oklahoma City, OK 73139,
Ph: 405-720-7721, Fax: 405-720-9848, Web: www.tecok.com
REGISTERED PROFESSIONAL ENGINEER OKLAHOMA R. WAYNE RUSSELL 16030

Design	RWR	9/8/2016
Drawn	CCC	9/8/2016

TEC A CLEAR DIRECTION

SIGNING AND STRIPING
STA. 401+00 TO 410+00 (CL I-240)
(3 OF 8)

State Job No. 09032(17) Sheet No. 116

OKLAHOMA COUNTY

9/8/2016 G:\0Projects\1-2457A I-240-I-35 Phase IA\CAD\STRIPE 3.dgn

REVISIONS		
NO.	DESCRIPTION	DATE

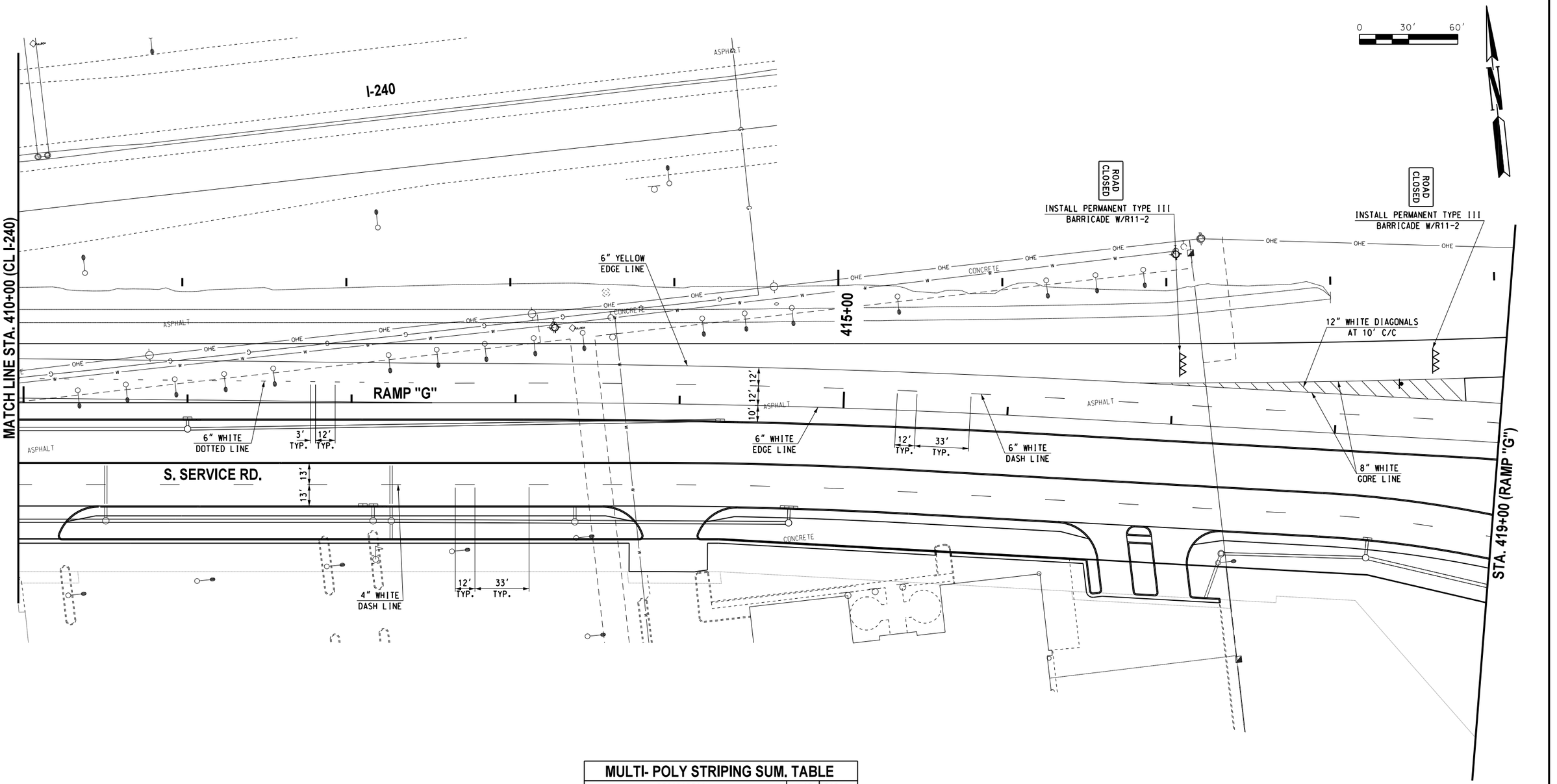

MULTI- POLY STRIPING SUM. TABLE

DESCRIPTION	UNIT	TOTALS
TRAFFIC STRIPE (MULI-POLY) 4" WHITE	L.F.	255
TRAFFIC STRIPE (MULI-POLY) 4" YELLOW	L.F.	0
TRAFFIC STRIPE (MULI-POLY) 6" WHITE	L.F.	1135
TRAFFIC STRIPE (MULI-POLY) 6" YELLOW	L.F.	706
TRAFFIC STRIPE (MULI-POLY) 6" BLACK	L.F.	0
TRAFFIC STRIPE (MULI-POLY) 8" WHITE	L.F.	400
TRAFFIC STRIPE (MULI-POLY) 8" YELLOW	L.F.	0
TRAFFIC STRIPE (MULI-POLY) 12" WHITE	L.F.	228
TRAFFIC STRIPE (MULI-POLY) 12" YELLOW	L.F.	0
TRAFFIC STRIPE (MULI-POLY) 24" WHITE	L.F.	0
TRAFFIC STRIPE (MULI-POLY) ARROWS	EA.	0
TRAFFIC STRIPE (MULI-POLY) WORDS	EA.	0
TRAFFIC STRIPE (MULI-POLY) SYMBOLS	EA.	0

R. WAYNE RUSSELL, P.E. # 16030
C.A. # 1160, RENEWAL 06-30-17

9-8-16
DATE

REGISTERED PROFESSIONAL ENGINEER R. WAYNE RUSSELL 16030 OKLAHOMA

Traffic Engineering Consultants, Inc.
6000 S. Western, Suite 300 - Oklahoma City, OK 73139,
Ph: 405-720-7721, Fax: 405-720-9848, Web: www.tecok.com

Design	RWR	9/8/2016
Drawn	CCC	9/8/2016

TEC A CLEAR DIRECTION

SIGNING AND STRIPING
STA. 410+00 TO 419+00 (CL RAMP "G")
(4 OF 8)

State Job No. 09032(17) Sheet No. 117

OKLAHOMA COUNTY

9/8/2016 G:\0Projects\1-2457A I-240-I-35 Phase IA\CAD\STRIPE 4.dgn

REVISIONS		
NO.	DESCRIPTION	DATE

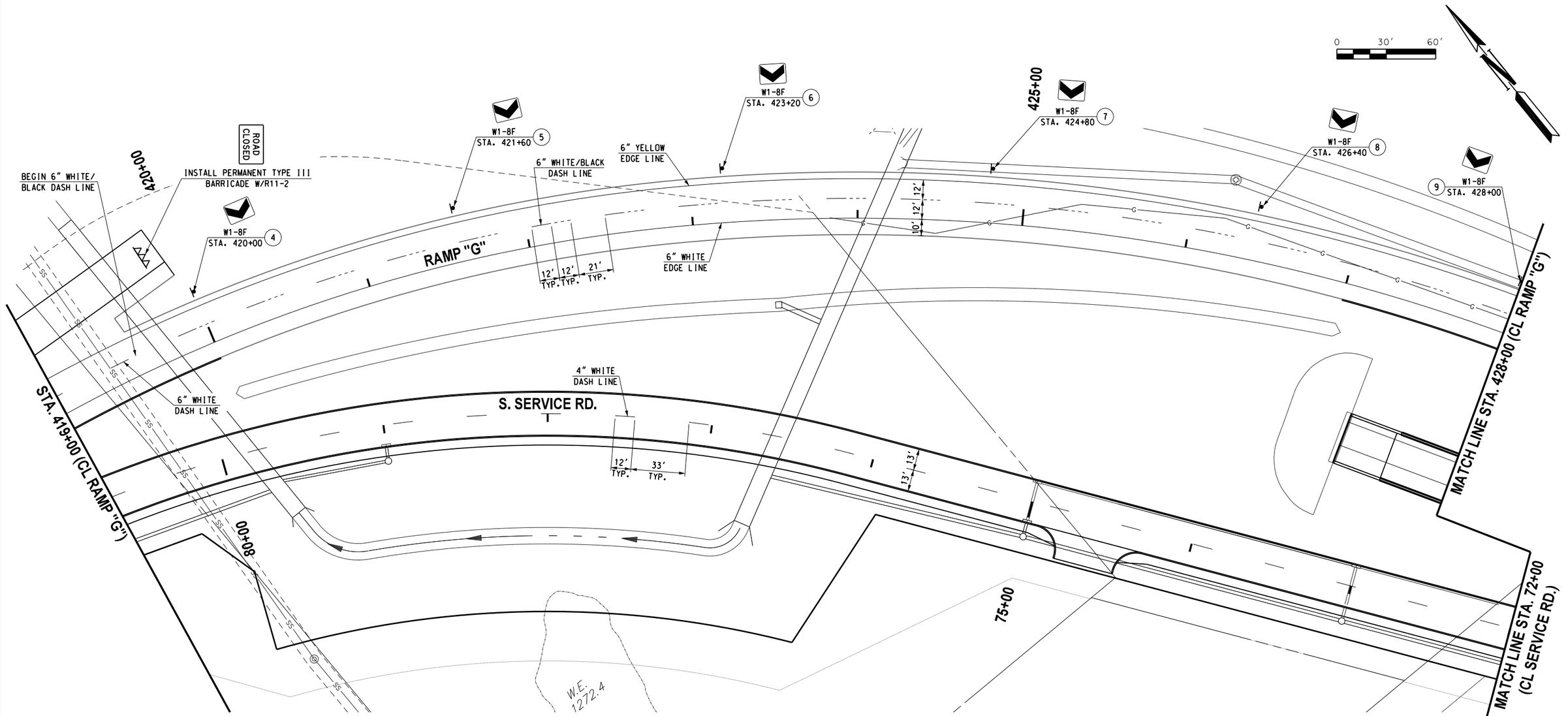

MULTI- POLY STRIPING SUM. TABLE

DESCRIPTION	UNIT	TOTALS
TRAFFIC STRIPE (MULI-POLY) 4" WHITE	L.F.	240
TRAFFIC STRIPE (MULI-POLY) 4" YELLOW	L.F.	0
TRAFFIC STRIPE (MULI-POLY) 6" WHITE	L.F.	1150
TRAFFIC STRIPE (MULI-POLY) 6" YELLOW	L.F.	920
TRAFFIC STRIPE (MULI-POLY) 6" BLACK	L.F.	230
TRAFFIC STRIPE (MULI-POLY) 8" WHITE	L.F.	0
TRAFFIC STRIPE (MULI-POLY) 8" YELLOW	L.F.	0
TRAFFIC STRIPE (MULI-POLY) 12" WHITE	L.F.	0
TRAFFIC STRIPE (MULI-POLY) 12" YELLOW	L.F.	0
TRAFFIC STRIPE (MULI-POLY) 24" WHITE	L.F.	0
TRAFFIC STRIPE (MULI-POLY) ARROWS	EA.	0
TRAFFIC STRIPE (MULI-POLY) WORDS	EA.	0
TRAFFIC STRIPE (MULI-POLY) SYMBOLS	EA.	0

R. WAYNE RUSSELL, P.E. # 16030
C.A. # 1160, RENEWAL 06-30-17

9-8-16
DATE

Traffic Engineering Consultants, Inc.
6000 S. Western, Suite 300 - Oklahoma City, OK 73139,
Ph: 405-720-7721, Fax: 405-720-9848, Web: www.tecok.com

REGISTERED PROFESSIONAL ENGINEER
R. WAYNE RUSSELL
16030
OKLAHOMA

Design	RWR	9/8/2016
Drawn	CCC	9/8/2016

TEC
A CLEAR DIRECTION

SIGNING AND STRIPING
STA. 419+00 TO 428+00 (CL RAMP "G")
(5 OF 8)

State Job No. 09032(17) Sheet No. 118

OKLAHOMA COUNTY

9/8/2016 G:\0Projects\17-2457A I-240-I-35 Phase IA\CAD\STRIPE 5.dgn

REVISIONS		
NO.	DESCRIPTION	DATE

0 30' 60'

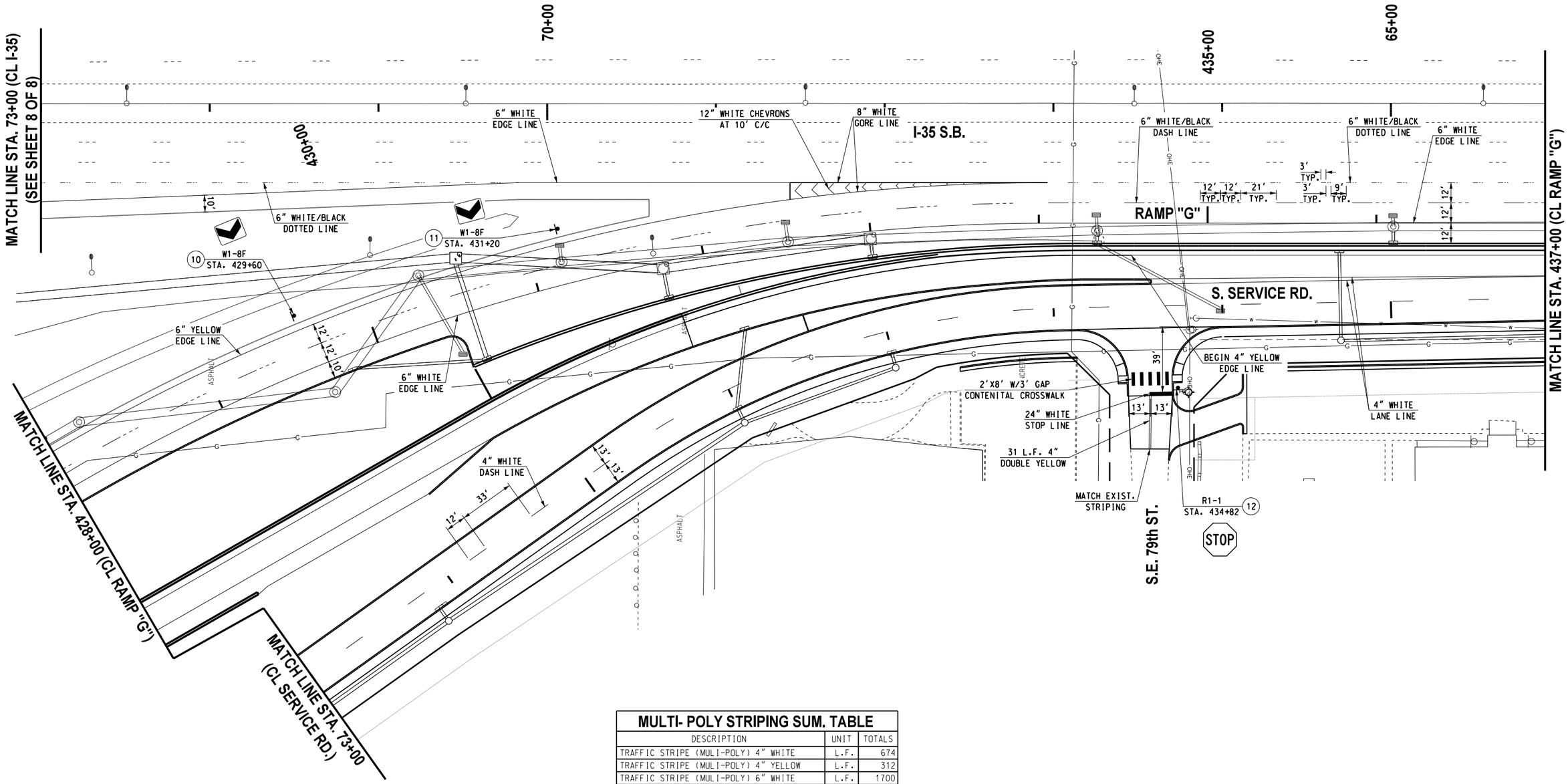

MULTI- POLY STRIPING SUM. TABLE

DESCRIPTION	UNIT	TOTALS
TRAFFIC STRIPE (MULI-POLY) 4" WHITE	L.F.	674
TRAFFIC STRIPE (MULI-POLY) 4" YELLOW	L.F.	312
TRAFFIC STRIPE (MULI-POLY) 6" WHITE	L.F.	1700
TRAFFIC STRIPE (MULI-POLY) 6" YELLOW	L.F.	465
TRAFFIC STRIPE (MULI-POLY) 6" BLACK	L.F.	357
TRAFFIC STRIPE (MULI-POLY) 8" WHITE	L.F.	306
TRAFFIC STRIPE (MULI-POLY) 8" YELLOW	L.F.	0
TRAFFIC STRIPE (MULI-POLY) 12" WHITE	L.F.	85
TRAFFIC STRIPE (MULI-POLY) 12" YELLOW	L.F.	0
TRAFFIC STRIPE (MULI-POLY) 24" WHITE	L.F.	60
TRAFFIC STRIPE (MULI-POLY) ARROWS	EA.	0
TRAFFIC STRIPE (MULI-POLY) WORDS	EA.	0
TRAFFIC STRIPE (MULI-POLY) SYMBOLS	EA.	0

R. WAYNE RUSSELL, P.E. # 16030
C.A. # 1160, RENEWAL 06-30-17

9-8-16
DATE

Traffic Engineering Consultants, Inc.
6000 S. Western, Suite 300 - Oklahoma City, OK 73139,
Ph: 405-720-7721, Fax: 405-720-9848, Web: www.tecok.com

REGISTERED PROFESSIONAL ENGINEER — R. WAYNE RUSSELL — 16030 — OKLAHOMA

Design	RWR	9/8/2016
Drawn	CCC	9/8/2016

TEC — A CLEAR DIRECTION

SIGNING AND STRIPING
STA. 428+00 TO 437+00 (CL RAMP "G")
(6 OF 8)

State Job No. 09032(17) Sheet No. 119

OKLAHOMA COUNTY

9/8/2016 G:\DPrOjects\1-2457A I-240-I-35 Phase IA\CAD\STRIPE 6.dgn

REVISIONS		
NO.	DESCRIPTION	DATE

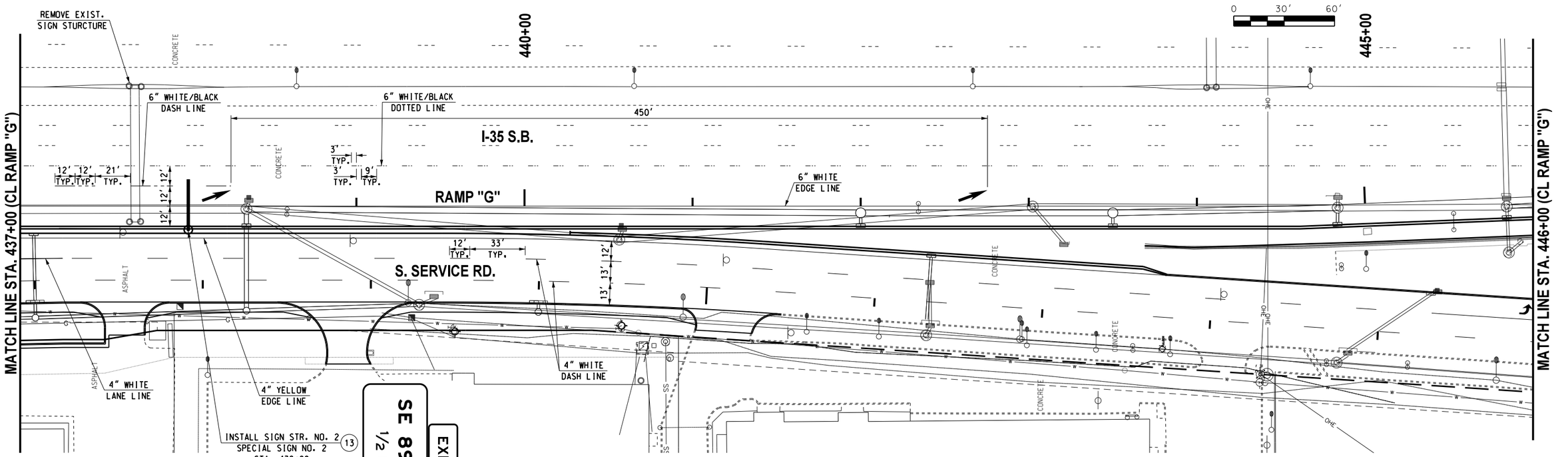

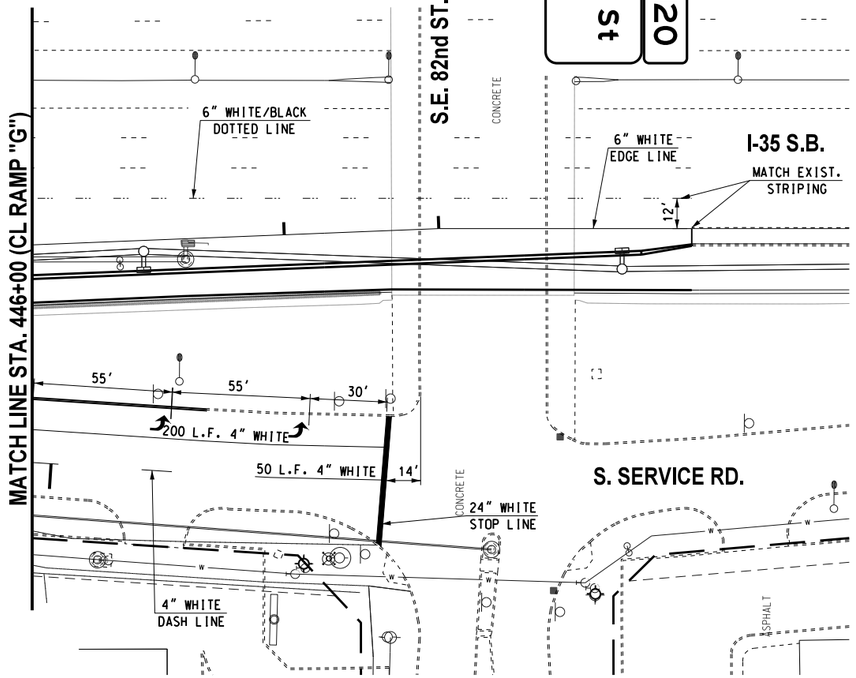

MULTI- POLY STRIPING SUM. TABLE

DESCRIPTION	UNIT	TOTALS
TRAFFIC STRIPE (MULI-POLY) 4" WHITE	L.F.	795
TRAFFIC STRIPE (MULI-POLY) 4" YELLOW	L.F.	682
TRAFFIC STRIPE (MULI-POLY) 6" WHITE	L.F.	1430
TRAFFIC STRIPE (MULI-POLY) 6" YELLOW	L.F.	0
TRAFFIC STRIPE (MULI-POLY) 6" BLACK	L.F.	270
TRAFFIC STRIPE (MULI-POLY) 8" WHITE	L.F.	0
TRAFFIC STRIPE (MULI-POLY) 8" YELLOW	L.F.	0
TRAFFIC STRIPE (MULI-POLY) 12" WHITE	L.F.	0
TRAFFIC STRIPE (MULI-POLY) 12" YELLOW	L.F.	0
TRAFFIC STRIPE (MULI-POLY) 24" WHITE	L.F.	52
TRAFFIC STRIPE (MULI-POLY) ARROWS	EA.	5
TRAFFIC STRIPE (MULI-POLY) WORDS	EA.	0
TRAFFIC STRIPE (MULI-POLY) SYMBOLS	EA.	0

R. WAYNE RUSSELL, P.E. # 16030
C.A. # 1160, RENEWAL 06-30-17

9-8-16
DATE

Traffic Engineering Consultants, Inc.
6000 S. Western, Suite 300 - Oklahoma City, OK 73139,
Ph: 405-720-7721, Fax: 405-720-9848, Web: www.tecok.com

REGISTERED PROFESSIONAL ENGINEER — R. WAYNE RUSSELL — 16030 — OKLAHOMA

Design	RWR	9/8/2016
Drawn	CCC	9/8/2016

TEC — A CLEAR DIRECTION

SIGNING AND STRIPING
STA. 437+00 TO 449+00 (CL RAMP "G")
(7 OF 8)

State Job No. 09032(17) Sheet No. 120

OKLAHOMA COUNTY

9/8/2016 G:\0Projects\T-2457A I-240-I-35 Phase IA\CAD\STRIPE 7.dgn

REVISIONS		
NO.	DESCRIPTION	DATE

0 30' 60'

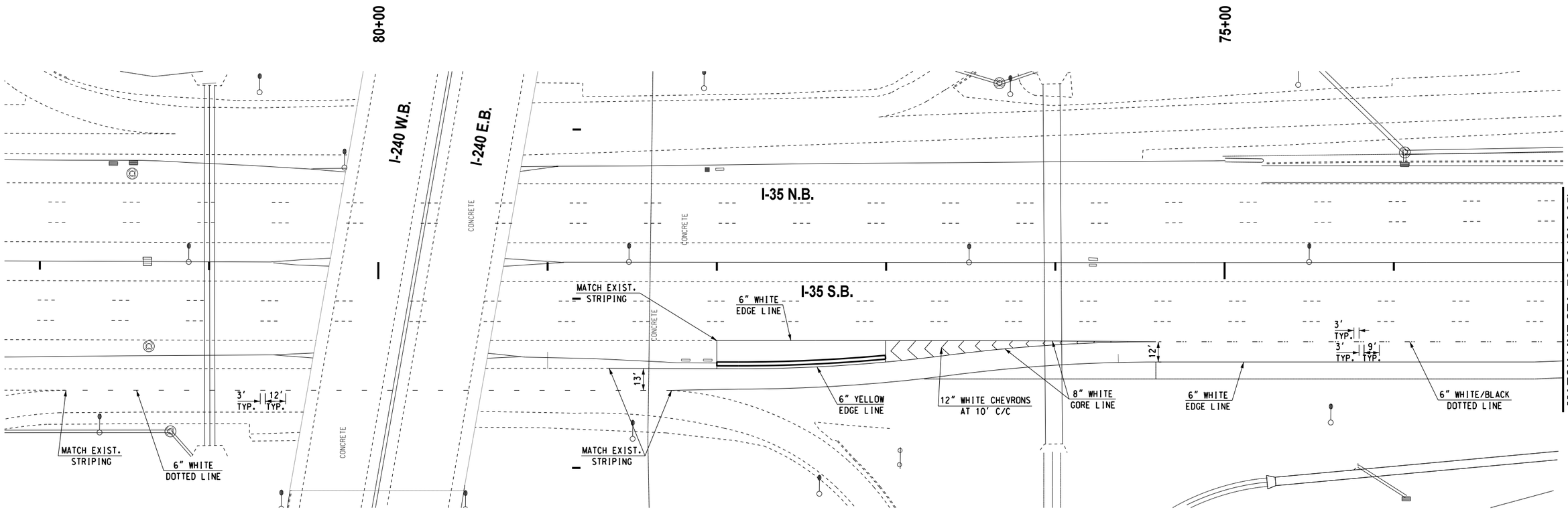

MULTI- POLY STRIPING SUM. TABLE

DESCRIPTION	UNIT	TOTALS
TRAFFIC STRIPE (MULI-POLY) 4" WHITE	L.F.	0
TRAFFIC STRIPE (MULI-POLY) 4" YELLOW	L.F.	0
TRAFFIC STRIPE (MULI-POLY) 6" WHITE	L.F.	745
TRAFFIC STRIPE (MULI-POLY) 6" YELLOW	L.F.	165
TRAFFIC STRIPE (MULI-POLY) 6" BLACK	L.F.	50
TRAFFIC STRIPE (MULI-POLY) 8" WHITE	L.F.	320
TRAFFIC STRIPE (MULI-POLY) 8" YELLOW	L.F.	0
TRAFFIC STRIPE (MULI-POLY) 12" WHITE	L.F.	140
TRAFFIC STRIPE (MULI-POLY) 12" YELLOW	L.F.	0
TRAFFIC STRIPE (MULI-POLY) 24" WHITE	L.F.	0
TRAFFIC STRIPE (MULI-POLY) ARROWS	EA.	0
TRAFFIC STRIPE (MULI-POLY) WORDS	EA.	0
TRAFFIC STRIPE (MULI-POLY) SYMBOLS	EA.	0

R. WAYNE RUSSELL, P.E. # 16030
C.A. # 1160, RENEWAL 06-30-17

9-8-16
DATE

Traffic Engineering Consultants, Inc.
6000 S. Western, Suite 300 - Oklahoma City, OK 73139,
Ph: 405-720-7721, Fax: 405-720-9848, Web: www.tecok.com

REGISTERED PROFESSIONAL ENGINEER
R. WAYNE RUSSELL
16030
OKLAHOMA

Design	RWR	9/8/2016
Drawn	CCC	9/8/2016

TEC A CLEAR DIRECTION

SIGNING AND STRIPING
STA. 82+00 TO 73+00 (CL I-35)
(8 OF 8)

State Job No. 09032(17) Sheet No. 121

OKLAHOMA COUNTY

9/8/2016 G:\OP\Projects\T-2457A I-240-I-35 Phase IA\CAD\STRIPE 8.dgn

REVISIONS		
REV. NO.	DESCRIPTION	DATE

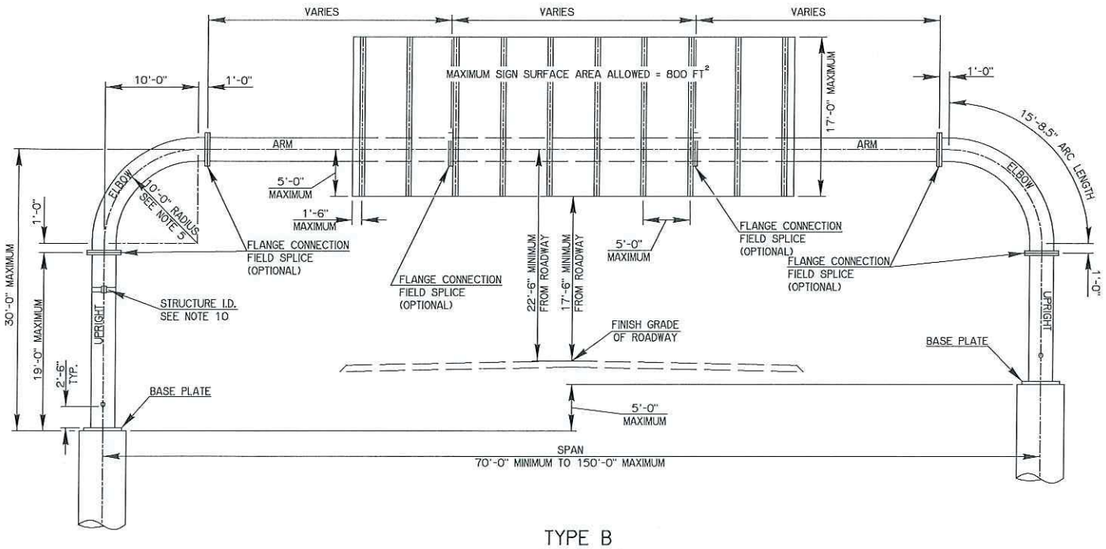

TYPE B

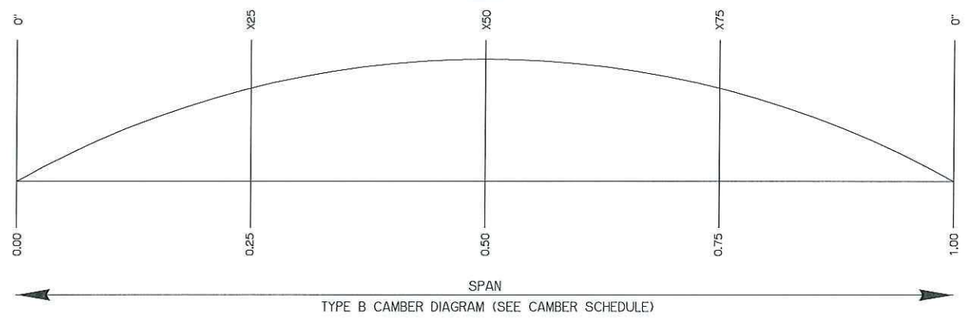

TYPE B CAMBER DIAGRAM (SEE CAMBER SCHEDULE)

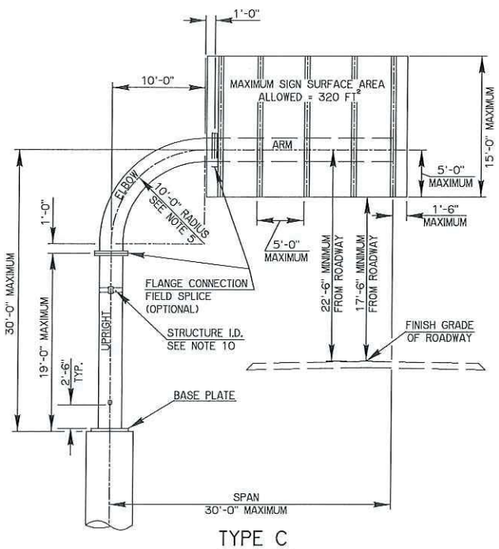

TYPE C

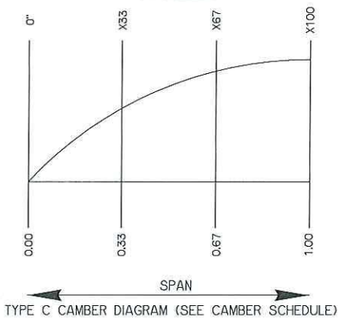

TYPE C CAMBER DIAGRAM (SEE CAMBER SCHEDULE)

TYPE B CAMBER SCHEDULE			
SPAN (FT)	X25 (IN)	X50 (IN)	X75 (IN)
70	1.08	1.27	1.08
75	1.20	1.43	1.20
80	1.32	1.61	1.32
85	1.46	1.81	1.46
90	1.61	2.03	1.61
95	1.62	1.94	1.62
100	1.77	2.22	1.77
105	1.93	2.46	1.93
110	2.10	2.72	2.10
115	2.28	3.00	2.28
120	2.48	3.31	2.48
125	2.60	3.65	2.60
130	2.92	4.01	2.92
135	3.17	4.40	3.17
140	3.43	4.83	3.43
145	3.71	5.29	3.71
150	4.02	5.78	4.02

TYPE C CAMBER SCHEDULE			
SPAN (FT)	X33 (IN)	X67 (IN)	X100 (IN)
30	0.86	1.44	2.03

GENERAL INSTALLATION PROCEDURES

ENSURE THAT ALL ANCHOR BOLTS, BASE PLATES, AND FLANGE PLATES ARE PROPERLY ALIGNED TO PREVENT UNACCEPTABLE DISTORTION OF THE STRUCTURE UPON FINAL INSTALLATION. IN THE EVENT THAT THE DRILLED SHAFT AND ANCHOR BOLTS ARE INSTALLED PRIOR TO THE FABRICATION OF THE MONOTUBE STRUCTURE, THE MONOTUBE FABRICATOR SHOULD COORDINATE WITH THE DRILLED SHAFT CONTRACTOR TO ENSURE THAT THE BASE PLATES AND FLANGES ARE FABRICATED SO THAT PROPER ALIGNMENT OF ALL BOLT HOLES IS ACHIEVED. IN THE EVENT THAT THE MONOTUBE SIGN STRUCTURE IS FABRICATED PRIOR TO THE INSTALLATION OF THE DRILLED SHAFT AND ANCHOR BOLTS, THE DRILLED SHAFT CONTRACTOR SHOULD COORDINATE WITH THE SIGN STRUCTURE FABRICATOR TO ENSURE THAT THE ANCHOR BOLT INSTALLATION ALLOWS FOR PROPER ALIGNMENT OF ALL BOLTED CONNECTIONS. CONSTRUCTION TOLERANCES SET FORTH IN THE 2009 OKLAHOMA DEPARTMENT OF TRANSPORTATION STANDARD SPECIFICATIONS FOR HIGHWAY CONSTRUCTION SHALL APPLY.

ERECT MONOTUBE SIGN STRUCTURE IN A MANNER APPROVED BY THE RESIDENT ENGINEER. SUPPORT ALL COMPONENTS OF THE STRUCTURE UNTIL FINAL TENSIONING OF ALL BOLTS AND FASTENERS IS COMPLETE.

INSTALLATION OF ALL FASTENERS AND BOLTS USING DIRECT TENSION INDICATORS SHALL BE IN ACCORDANCE WITH THE 2009 OKLAHOMA DEPARTMENT OF TRANSPORTATION STANDARD SPECIFICATIONS FOR HIGHWAY CONSTRUCTION. ENSURE THAT THE MONOTUBE SIGN STRUCTURE IS PROPERLY ATTACHED TO THE ANCHOR BOLTS AND THAT ALL LEVELING NUTS ARE FLUSH WITH THE BOTTOM OF THE BASE PLATE. ENSURE THAT ALL FLANGES HAVE BEEN SECURELY FASTENED.

BASIS OF PAYMENT		
ITEM NO.	ITEM	UNIT
852(D)	OVHD.SN.STR., MONOTUBE TYPE B	EA
852(E)	OVHD.SN.STR., MONOTUBE TYPE C	EA

GENERAL NOTES

1. MAXIMUM SIGN HEIGHT TO BE USED ON THE TYPE C STRUCTURE SHALL BE 15 FEET. MAXIMUM SIGN HEIGHT TO BE USED ON THE TYPE B STRUCTURE SHALL BE 17 FEET.
2. MAXIMUM SIGN AREA TO BE USED ON THE TYPE C STRUCTURE SHALL BE 320 SQUARE FEET. MAXIMUM SIGN AREA TO BE USED ON THE TYPE B STRUCTURE SHALL BE 800 SQUARE FEET.
3. FOR SIGNS LESS THAN 10'-0" TALL, SIGNS SHALL BE CENTERED ON THE SPAN. FOR SIGNS GREATER THAN OR EQUAL TO 10'-0" TALL, BOTTOM OF SIGNS SHALL BE 5'-0" BELOW ℄ OF THE SPAN.
4. THE LENGTH OF THE ARM MEMBERS LABELED AS 'VARIES' SHOULD BE A MINIMUM OF 30'-0" FOR TYPE 'B' MONOTUBE SIGN STRUCTURES.
5. ADJUST BEND RADIUS ACCORDING TO CAMBER DIAGRAM. ALL TRANSVERSE PLATES CONNECTING TO AN ELBOW SHALL BE PERPENDICULAR TO THE CENTERLINE OF THE ELBOW AT THE LOCATION OF THE CONNECTION.
6. STRUCTURAL STEEL TUBING USED IN THE FABRICATION OF MONOTUBES SHALL EITHER BE COLD-FORMED WELDED OR SEAMLESS TUBING CONFORMING TO THE ASTM A500, GRADE C (MEETING AASHTO M270 ZONE 2 FRACTURE CRITICAL CHARPY V-NOTCH REQUIREMENTS) OR API 5L PSL 2, GRADE X52 (MEETING AASHTO M270 ZONE 2 FRACTURE CRITICAL CHARPY V-NOTCH REQUIREMENTS).
7. BASE PLATES, FLANGE PLATES, AND FILLER PLATES TO BE STRUCTURAL STEEL CONFORMING TO THE SPECIFICATIONS OF ASTM DESIGNATION: A709, GRADE 50.
8. ALL FLANGE BOLTS TO CONFORM TO THE SPECIFICATIONS OF ASTM A490, TYPE 1,AND SHALL BE TIGHTENED AND INSPECTED USING DIRECT TENSION INDICATORS TO CONFORM TO THE SPECIFICATIONS OF ASTM F959,TYPE 490. ALL WASHERS TO CONFORM TO THE SPECIFICATIONS OF ASTM F436, TYPE 1. ALL NUTS USED TO FASTEN ASTM A490 BOLTS SHALL BE ASTM A563, GRADE DH. ALL ANCHOR BOLTS TO CONFORM TO THE SPECIFICATIONS OF ASTM F1554-GRADE 55 (MEETING ASTM F1554 CHARPY V-NOTCH REQUIREMENTS) AND TO BE TIGHTENED AND INSPECTED USING DIRECT TENSION INDICATORS CONFORMING TO THE SPECIFICATIONS OF ASTM F2437 (TYPE 1 GRADE 55). ALL ANCHOR BOLT NUTS TO CONFORM TO THE SPECIFICATIONS OF ASTM A563-GRADE A. ALL ANCHOR BOLT WASHERS TO CONFORM TO THE SPECIFICATIONS OF ASTM F436, TYPE 1.
9. HOT-DIP GALVANIZE ALL TUBE MEMBERS AND PLATES PER ASTM A123. COAT ASTM A490 FASTENERS PER ASTM F1136, GRADE 3. WHEN COATING ASTM A490 FASTENERS HYDROGEN EMBRITTLEMENT SHALL BE INVESTIGATED AND PREVENTED PER THE APPLICABLE ASTM SPECIFICATIONS. COAT NUTS USED WITH ASTM A490 FASTENERS PER ASTM F1136, GRADE 5. COAT WASHERS USED WITH ASTM A490 FASTENERS PER ASTM F1136, GRADE 3. COAT ANCHOR BOLTS, NUTS USED WITH ANCHOR BOLTS, AND WASHERS USED WITH ANCHOR BOLTS PER ASTM F2329.
10. STAMP STRUCTURE IDENTIFICATION ON UPRIGHT OF STRUCTURE WITH THE FOLLOWING INFORMATION: JP#,TYPE 'B' OR TYPE 'C', STRUCTURE LENGTH, MAXIMUM ALLOWABLE SIGN AREA, MAXIMUM ALLOWABLE SIGN HEIGHT, DATE MANUFACTURED, AND MANUFACTURER'S NAME.
11. MAST ARMS TO BE TEMPORARILY SUPPORTED TO TAKE ALL LOAD OFF OF THE FIELD SPLICES WHILE BOLTS ARE BEING TIGHTENED IN ORDER TO FIRMLY SEAT THE FLANGE PLATES AND BASE PLATES.
12. POSTS FOR TUBULAR SIGN STRUCTURES TO BE FORMED TO THE RADII SHOWN ON THE PLANS BY FABRICATION METHODS WHICH WILL NOT CRIMP OR BUCKLE THE INTERIOR RADIUS OF THE PIPE BEND.
13. CLIPS, EYES OR REMOVABLE BRACKETS TO BE AFFIXED TO ALL POSTS AND MAST ARMS, AS NECESSARY, TO SECURE THE SIGN DURING SHIPPING AND FOR LIFTING AND MOVING DURING ERECTION. THIS IS TO PREVENT DAMAGE TO THE FINISHED GALVANIZED OR PAINTED SURFACES. BRACKETS ON TUBULAR SIGN STRUCTURES TO BE REMOVED AFTER ERECTION. DETAILS OF SUCH DEVICES TO BE SHOWN ON THE SHOP DRAWINGS.
14. BOLTS WITH DIAMETERS EXCEEDING BY UP TO 1/4 INCH THE DIAMETER OF THE BOLTS SHOWN ON THE PLANS MAY BE USED, PROVIDED THAT THE REQUIRED CLEARANCES AND EDGE DISTANCE ARE NOT REDUCED BELOW THAT REQUIRED FOR THE LARGER BOLT.
15. FABRICATE ALL SIGN STRUCTURES TO THE LARGEST PRACTICAL SECTIONS PRIOR TO GALVANIZING. SPLICE LOCATIONS SHALL BE SUBMITTED TO THE ENGINEER FOR APPROVAL AND THE CONTRACTOR SHALL NOT COMMENCE FABRICATION UNTIL SUCH SPLICE LOCATIONS ARE APPROVED.
16. ALL TYPE 'C' SIGN STRUCTURES TO HAVE A REMOVABLE CAP ON THE END OF THE HORIZONTAL MEMBER OF THE STRUCTURE.
17. WELDING OF STEEL TO CONFORM TO THE REQUIREMENTS OF AWS D1.1(LATEST REVISION). GRIND ALL AREAS TO BE WELDED TO BRIGHT METAL. COMPLETE ALL WELDING AND REQUIRED NON -DESTRUCTIVE TESTING BEFORE MATERIAL IS GALVANIZED. TEST ALL CIRCUMFERENTIAL WELDS NON- DESTRUCTIVELY USING THE ENHANCED MAGNETIC PARTICLE METHOD IN ACCORDANCE WITH ODOT STANDARD SPECIFICATION 720.03B. MAXIMUM WELD UNDERCUT SHALL BE 0.01".
18. ALL TUBE-TO-TRANSVERSE PLATE COMPLETE JOINT PENETRATION (CJP) GROOVE WELDS SHALL BE ULTRASONICALLY TESTED (UT) FOR CRACKS BEFORE AND AFTER GALVANIZATION.
19. WELD FILLER MATERIAL SHALL MEET ALL CHARPY V-NOTCH REQUIREMENTS SPECIFIED IN AWS D1.1 AT A TEMPERATURE OF 40°F.
20. ALL BASE METAL SHALL BE PREHEATED IN ACCORDANCE WITH AWS D1.1 PRIOR TO WELDING.
21. BACKING RING SHALL BE THOROUGHLY FUSED WITH THE WELD MATERIAL.
22. SMAW ELECTRODES SHALL BE THE LOW-HYDROGEN CLASSIFICATION AS DEFINED BY AWS D1.1.
23. STORAGE, HANDLING, AND USE OF LOW-HYDROGEN ELECTRODES SHALL BE IN CONFORMANCE WITH AWS D1.1.
24. THERE SHALL BE NO POST WELD HEAT TREATMENT OF THE TUBE-TO-TRANSVERSE PLATE CONNECTION.
25. THE CONTRACTOR SHALL PROVIDE SHOP DRAWINGS TO ODOT BRIDGE DIVISION. A WELDING PROCEDURE SPECIFICATION (WPS) SHALL BE ATTACHED TO THE SHOP DRAWINGS.
26. BACKING RING MATERIAL SHALL BE IN ACCORDANCE WITH AWS D1.1.

PREPARED BY:
OKLAHOMA DEPARTMENT OF TRANSPORTATION
BRIDGE DESIGN DIVISION

7/27/16
DATE

JASON D. GIEBLER
OKLA. REG. NO. 24272
Signing for Monotube Sheets: M1-M7

LICENSED PROFESSIONAL ENGINEER
JASON D. GIEBLER
24272
OKLAHOMA

MONOTUBE STRUCTURE (TYPE 'B' & TYPE 'C')

Design	JG	JW
Detail	JG	JW
Check	JG	JW
Squad: SUPERVISOR		
Engr. ENGINEER		

STATE OF OKLAHOMA | DEPARTMENT OF TRANSPORTATION
JOB PIECE NO. 09032(17) | SHEET NO. M1

REVISIONS		
REV. NO.	DESCRIPTION	DATE

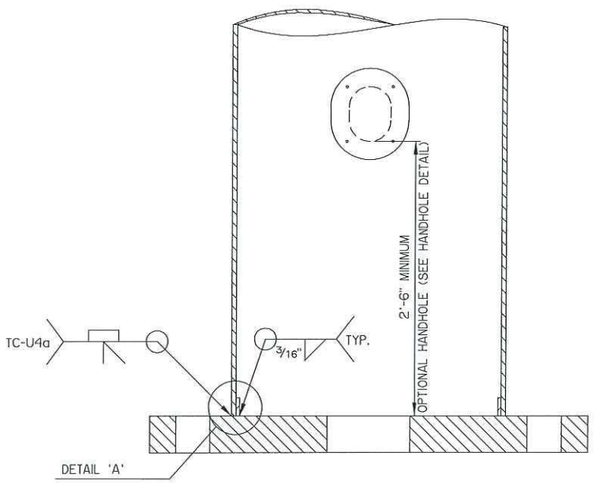

TUBE-TO-TRANSVERSE-PLATE DETAIL (TYPICAL)

(DETAIL TYPICAL FOR BASE AND FLANGE PLATES)

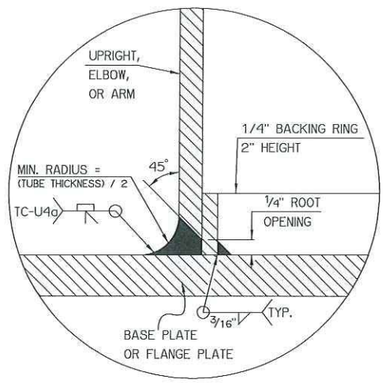

DETAIL 'A'

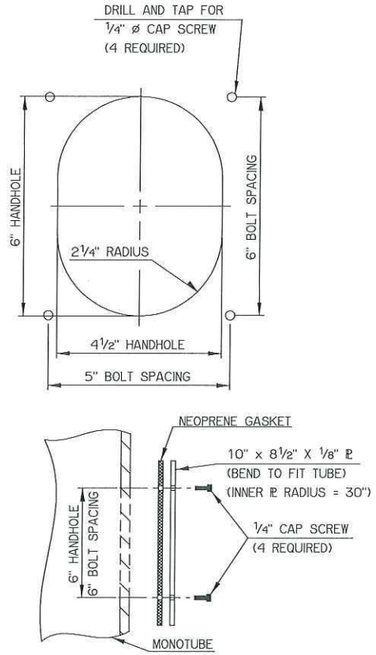

HANDHOLE DETAIL

(OPTIONAL)

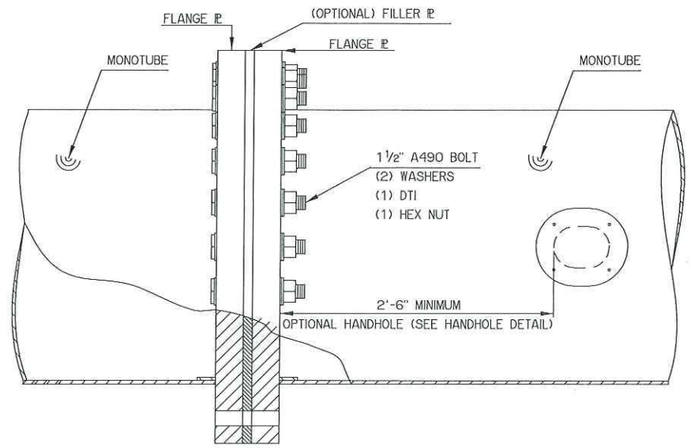

TYPICAL FLANGE CONNECTION DETAIL

NOTE: OPTIONAL HANDHOLES FOR TYPE 'B' STRUCTURES SHOULD BE POSITIONED ON THE ROADWAY FACE OF THE TUBE.

OPTIONAL FILLER PLATE NOTE:

DURING ASSEMBLY OF THE FLANGE CONNECTIONS, THE TWO ADJOINING MEMBERS SHALL NOT BE PULLED TOGETHER AND TIGHTENED IF A GAP OF OVER 1/8" EXISTS. IF A GAP EXCEEDING THIS TOLERANCE IS ENCOUTERED, THE CONTRACTOR IS PERMITTED TO USE A FILLER PLATE AT A HORIZONTAL MEMBER FLANGE CONNECTION. THE MAXIMUM THICKNESS OF A FILLER PLATE AT ANY SINGLE FLANGE CONNECTION IS 1". IF MORE THAN 1", BUT LESS THAN OR EQUAL TO 6", IS REQUIRED FOR ASSEMBLY THE REQUIRED DIMENSION SHALL BE SEPERATED INTO TWO DIFFERENT FLANGE CONNCETIONS AND THE TWO FLANGE CONNECTIONS SHALL BE LOCATED SYMMETRICALLY ALONG THE TYPE B MONOTUBE STRUCTURE. ADDITION OF FILLER PLATES SHALL BE AT THE COST OF THE CONTRACTOR.

MONOTUBE SCHEDULE				
SPAN	TUBE DIAMETER (ALL TUBES)	TUBE THICKNESS (ALL TUBES)	BASE PL	FLANGE PL
70FT - 90FT	30"	3/8"	TYPICAL	A
95FT - 150FT	30"	1/2"	TYPICAL	B

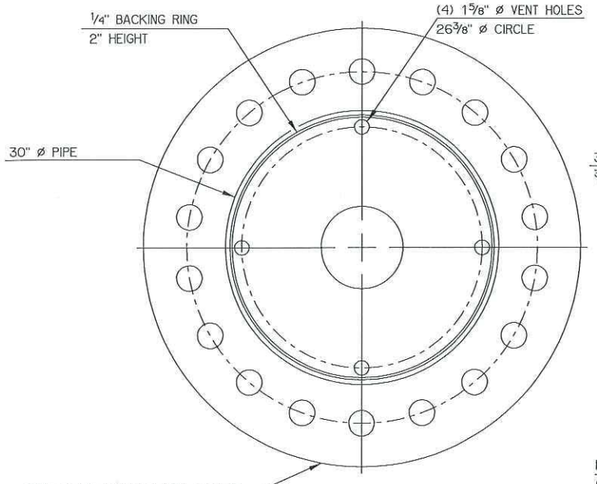

BASE PLATE

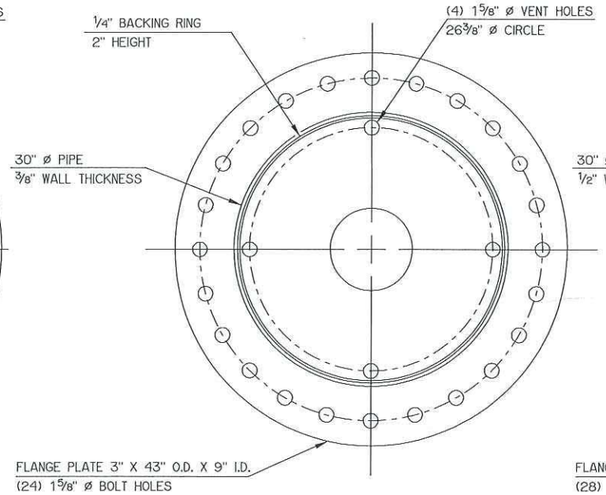

FLANGE PLATE 'A'

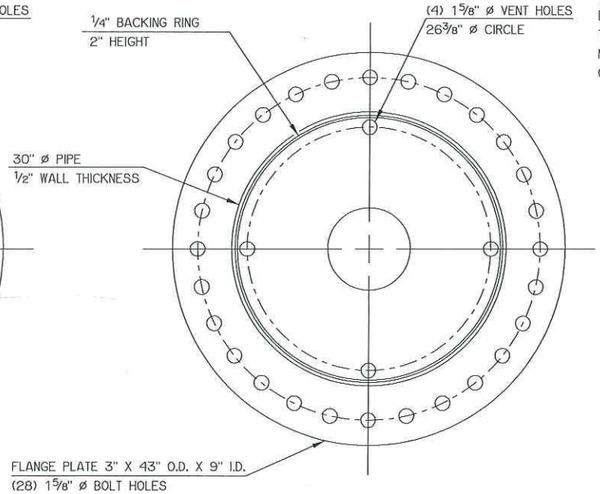

FLANGE PLATE 'B'

MONOTUBE STRUCTURE
(TYPE 'B' DETAIL)

Design	JG	JW
Detail	JG	JW
Check	JG	JW

Squad: SUPERVISOR
Engr. ENGINEER

STATE OF OKLAHOMA | DEPARTMENT OF TRANSPORTATION

JOB PIECE NO. 09032(17) | SHEET NO. M2

REVISIONS		
REV. NO.	DESCRIPTION	DATE

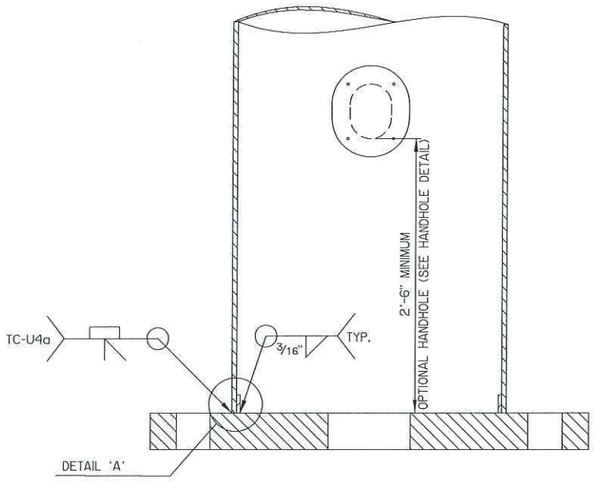

TUBE-TO-TRANSVERSE-PLATE DETAIL (TYPICAL)
(DETAIL TYPICAL FOR BASE AND FLANGE PLATES)

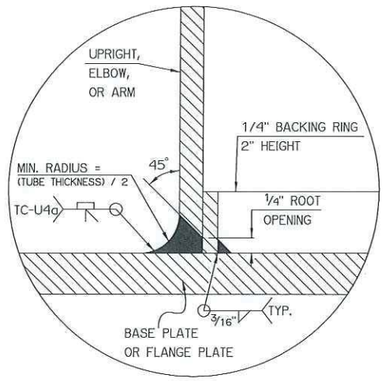

DETAIL 'A'

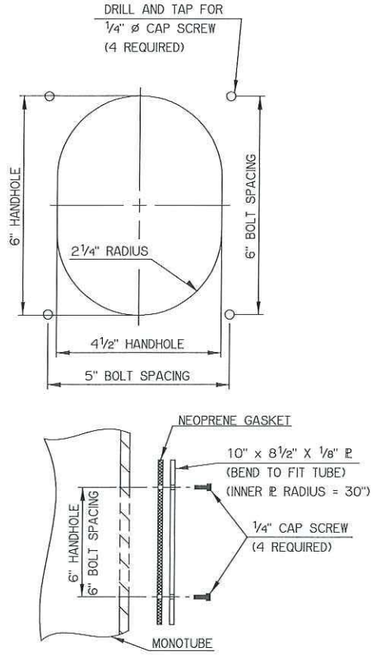

HANDHOLE DETAIL
(OPTIONAL)

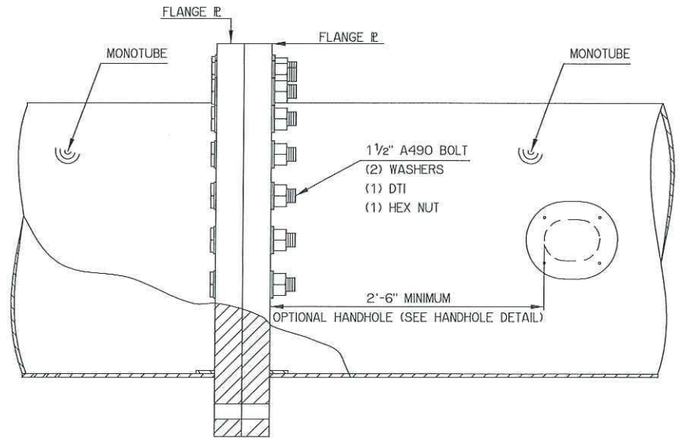

TYPICAL FLANGE CONNECTION DETAIL

NOTE: OPTIONAL HANDHOLES FOR TYPE 'C' STRUCTURES SHOULD BE POSITIONED ON THE DOWN TRAFFIC FACE OF THE TUBE.

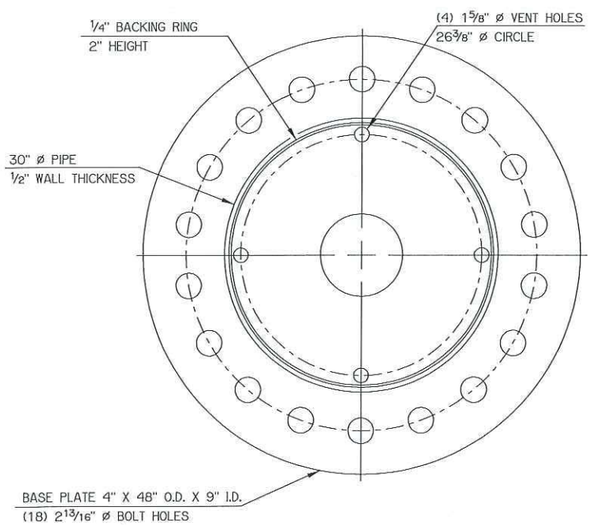

BASE PLATE

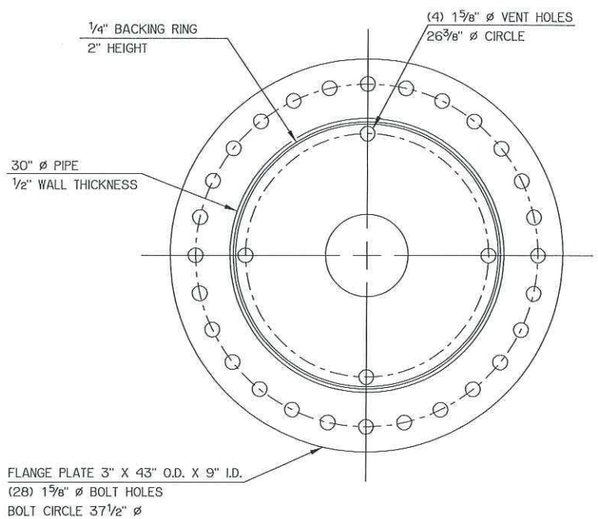

FLANGE PLATE

MONOTUBE STRUCTURE
(TYPE 'C' DETAILS)

Design	JG	JW
Detail	JG	JW
Check	JG	JW
Supvr.	SUPERVISOR	
Engr.	ENGINEER	

STATE OF OKLAHOMA | DEPARTMENT OF TRANSPORTATION
JOB PIECE NO. 09032(17) | SHEET NO. M3

REVISIONS			
REV. NO.	DESCRIPTION		DATE

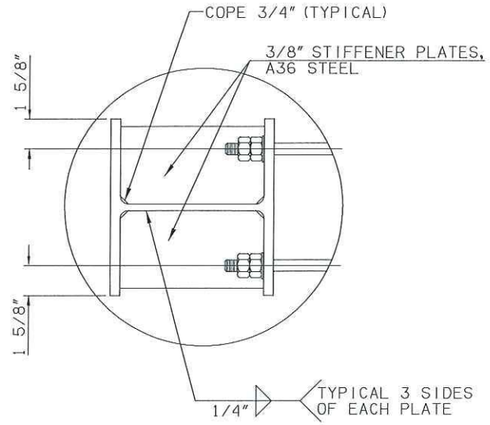

DETAIL 'B'

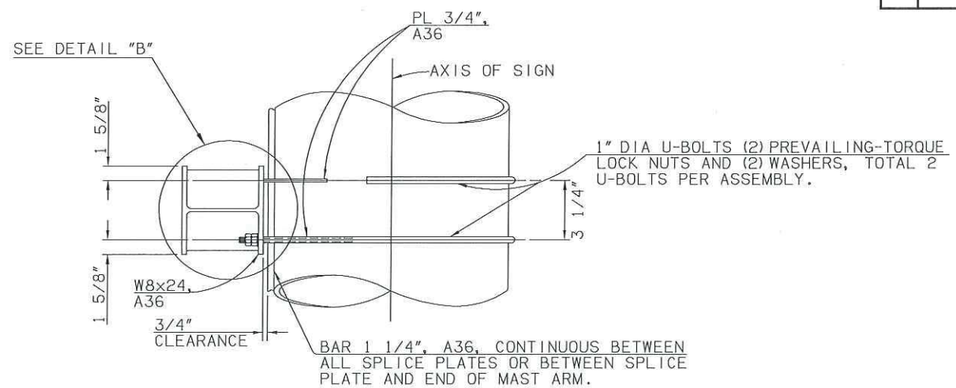

VIEW A-A

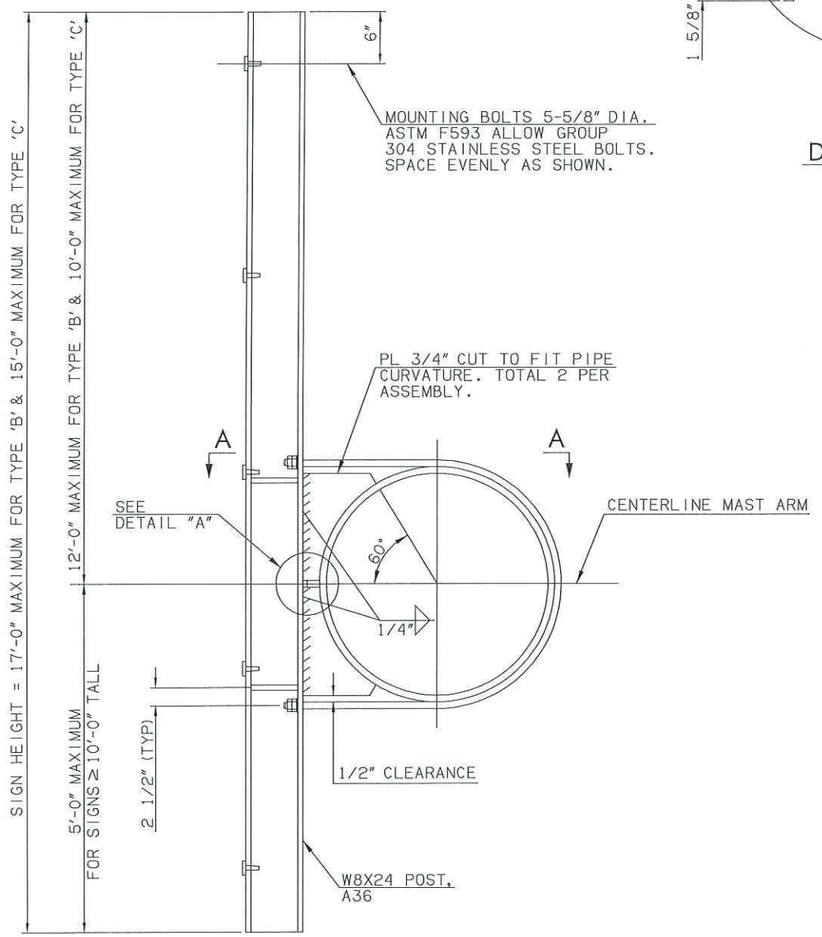

SIGN MOUNTING BRACKET

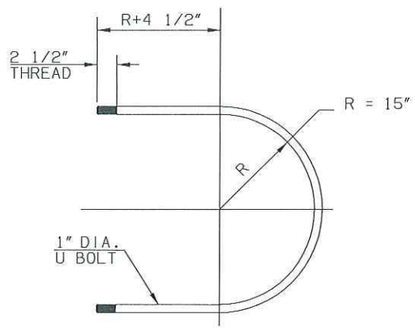

U BOLT DETAIL

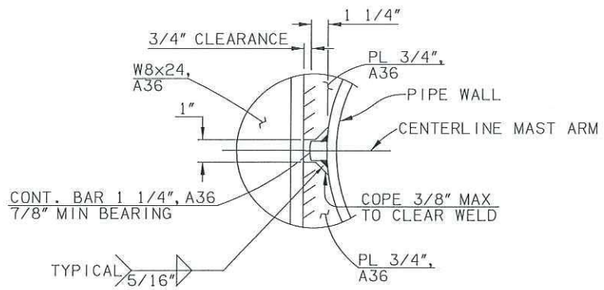

DETAIL 'A'

GENERAL NOTES

1. ALL U-BOLTS SHALL CONFORM TO THE MATERIAL SPECIFICATIONS OF ASTM A193-B7, AND THREADS SHALL CONFORM TO ASTM A325 SECTION 7.2. ALL U-BOLT NUTS SHALL BE PREVAILING- TORQUE LOCK NUTS AND SHALL CONFORM TO THE SPECIFICATION OF ASTM A194-2H. ALL WASHERS SHALL CONFORM TO THE SPECIFICATIONS OD ASTM F436.

MONOTUBE STRUCTURE
(OVERHEAD SIGN BRACKET DETAIL)

Design	JG	JW
Detail	JG	JW
Check	JG	JW
Squad: SUPERVISOR		
Engr. ENGINEER		

STATE OF OKLAHOMA | DEPARTMENT OF TRANSPORTATION

JOB PIECE NO. 09032(17) | SHEET NO. M4

REVISIONS		
REV. NO.	DESCRIPTION	DATE

(1) USE W20 SPIRAL IN ACCORDANCE WITH 723.07 OF THE STANDARD SPECIFICATIONS. CONTRACTOR MAY SUBSTITUTE #4 SPRIAL BAR GRADE 60 IN ACCORDANCE WITH AASHTO M32.

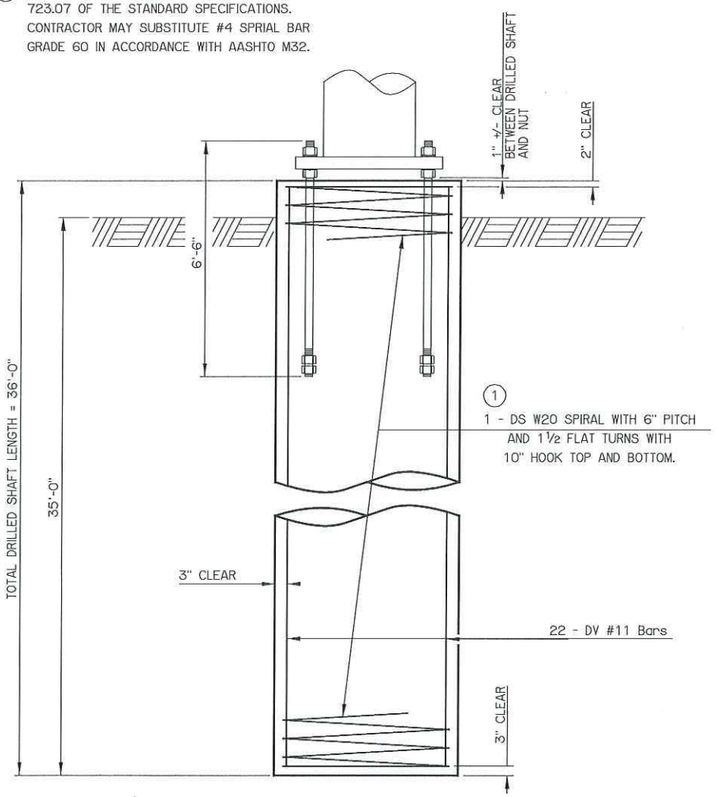

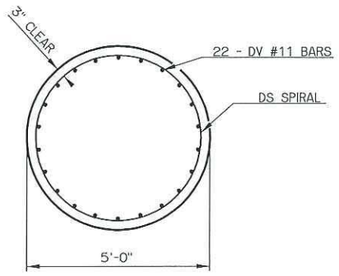

TYPICAL SECTION THRU
60" DRILLED SHAFT

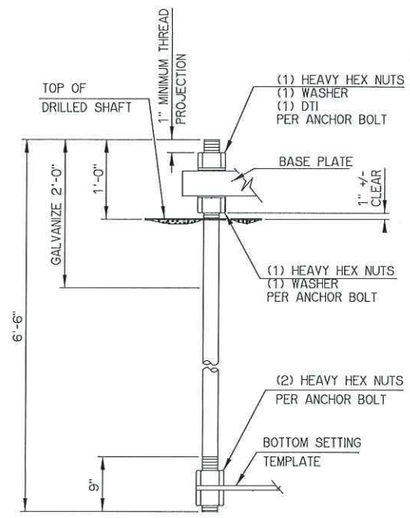

2½" ø ANCHOR BOLT DETAIL
(F1554 GR. 55)

DRILLED SHAFT NOTES:

MATERIAL PROPERTIES
- CLASS 'AA' CONCRETE = 4,000 PSI
- REINFORCING STEEL = 60,000 PSI

THE DRILLED SHAFT FOR THE MONOTUBE SIGN STRUCTURE HAS BEEN DESIGNED FOR THE FOLLOWING PROPERTIES:

-- COHESIVE SOIL
- UNIT WEIGHT = 120 PCF
- COHESION = 1000 PSF

-- GRANULAR SOIL
- UNIT WEIGHT = 120 PCF
- INTERNAL FRICTION ANGLE = 28 DEGREES

IF SITE CONDITIONS ARE ENCOUNTERED THAT DIFFER FROM THOSE SPECIFIED ABOVE, THE ENGINEER SHALL BE CONTACTED. SUCH CONDITIONS ARE, BUT NOT LIMITED TO, AS FOLLOWS:

-- SOIL HAS HIGH ORGANIC CONTENT OR CONSISTS OF SATURATED SILT AND CLAY.
-- THE SITE WON'T SUPPORT THE WEIGHT OF THE DRILLING RIG.
-- ROCK IS ENCOUNTERED.

DRILLED SHAFTS SHALL BE CONSTRUCTED ACCORDING TO THE OKLAHOMA DEPARTMENT OF TRANSPORTATION'S STANDARD SPECIFICATIONS FOR HIGHWAY CONSTRUCTION AND ASSOCIATED SPECIAL PROVISIONS. THE USE OF THE "DOUBLE CASING METHOD" IS NOT ALLOWED FOR THIS DESIGN.

THE CONTRACTOR SHALL BE RESPONSIBLE FOR CONFIRMING THAT THE LOCATION AND ELEVATION OF THE DRILLED SHAFT ARE AS REQUIRED IN THE PLANS. THE CONTRACTOR SHALL COORDINATE WITH THE MONOTUBE SUPPLIER TO ENSURE THAT THE ORIENTATION OF THE ANCHOR BOLTS IN THE DRILLED SHAFT ALLOW FOR PROPER ALIGNMENT OF ALL BASE PLATES AND FLANGES UPON FINAL INSTALLATION.

NOTE: FOR ADDITIONAL DRILLED SHAFT DETAILS, SEE "MONOTUBE STRUCTURE (DRILLED SHAFT DETAILS) (SHEET 3 OF 3)". FOR DRILLED SHAFT DETAILS IN THE MEDIAN, SEE "MONOTUBE STRUCTURE (DRILLED SHAFT DETAILS) (SHEET 2 OF 3)".

DRILLED SHAFT BAR LIST
(INCLUDED IN CONTRACT UNIT PRICE OF DRILLED SHAFT)

MARK	SIZE	NO.	FORM	LENGTH
PLAIN REINFORCING BARS				
DS	W20	1	BNT	1,052'-9"
DV	#11	22	STR	35'-7"

BASIS OF PAYMENT		
ITEM NO.	DESCRIPTION	UNIT
(2) 516(A)	DRILLED SHAFTS 60" DIAMETER	L.F.

(2) ALL COSTS OF CONCRETE AND REINFORCING IN DRILLED SHAFTS SHALL BE INCLUDED IN THE PRICE BID FOR "DRILLED SHAFTS 60" DIAMETER".

MONOTUBE STRUCTURE
(DRILLED SHAFT DETAILS)
(SHEET 1 OF 3)

Design	JG	JW
Detail	JG	JW
Check	JG	JW

Supvr: SUPERVISOR
Engr. ENGINEER

STATE OF OKLAHOMA | DEPARTMENT OF TRANSPORTATION
JOB PIECE NO. 09032(17) | SHEET NO. M5

REVISIONS			
REV. NO.	DESCRIPTION		DATE

(1) USE W20 SPIRAL IN ACCORDANCE WITH 723.07 OF THE STANDARD SPECIFICATIONS. CONTRACTOR MAY SUBSTITUTE #4 SPRIAL BAR GRADE 60 IN ACCORDANCE WITH AASHTO M32.

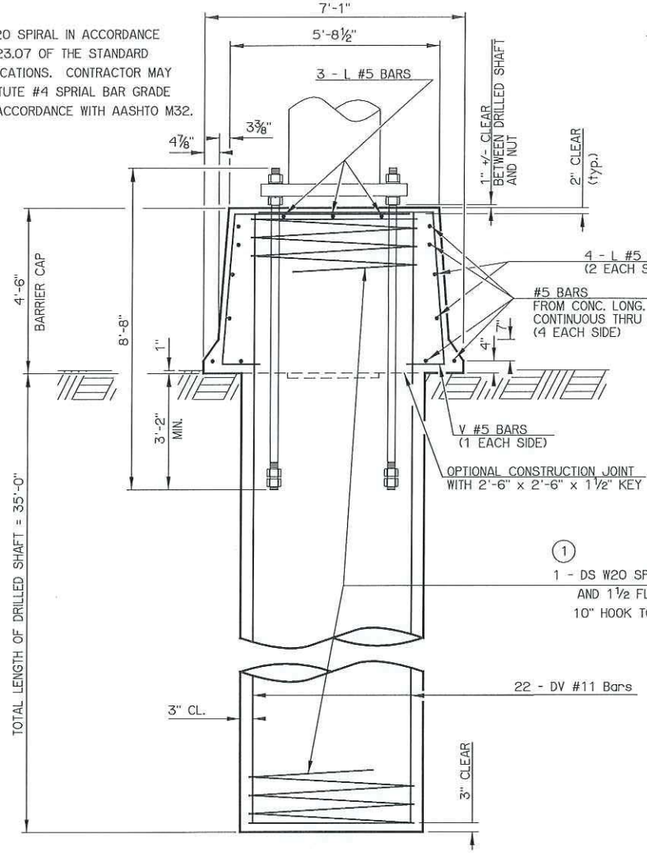

CROSS SECTION (PARALLEL TO TRAFFIC)

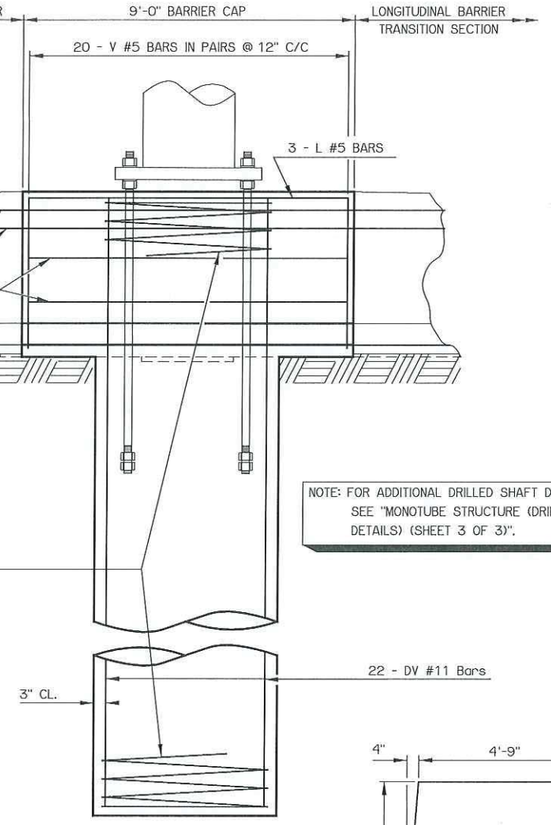

CROSS SECTION (PERPENDICULAR TO TRAFFIC)

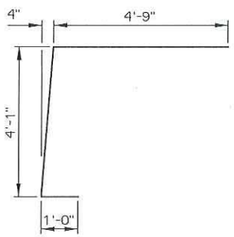

V #5 BAR X 9'-11"

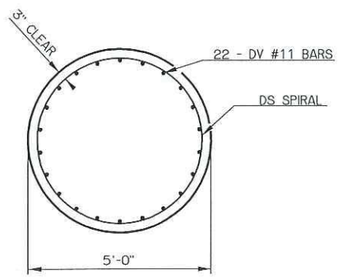

TYPICAL SECTION THRU 60" DRILLED SHAFT

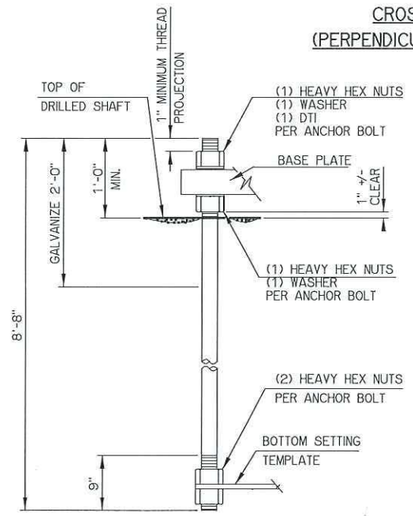

2½" ø ANCHOR BOLT DETAIL
(F1554 GR. 55)

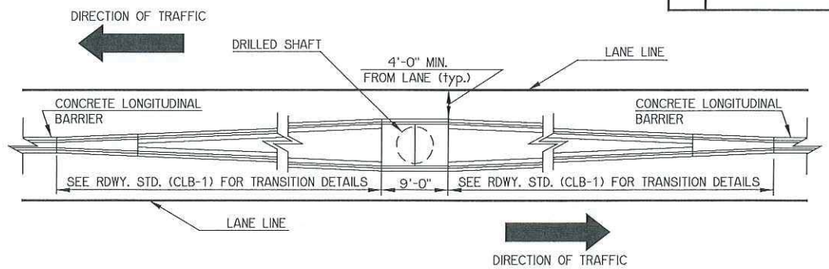

CONCRETE LONGITUDINAL BARRIER DETAIL (PLAN VIEW)

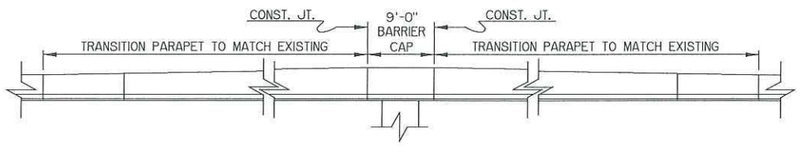

CONCRETE LONGITUDINAL BARRIER DETAIL (ELEVATION VIEW)

NOTE: FOR ADDITIONAL DRILLED SHAFT DETAILS, SEE "MONOTUBE STRUCTURE (DRILLED SHAFT DETAILS) (SHEET 3 OF 3)".

NOTE: CONCRETE LONGITUDINAL BARRIER SHALL BE CONSTRUCTED IN ACCORDANCE WITH ROADWAY STANDARD CLB-1 EXCEPT FOR AS SHOWN HERE.

DRILLED SHAFT NOTES:

MATERIAL PROPERTIES
CLASS 'AA' CONCRETE = 4,000 PSI
REINFORCING STEEL = 60,000 PSI

THE DRILLED SHAFT FOR THE MONOTUBE SIGN STRUCTURE HAS BEEN DESIGNED FOR THE FOLLOWING PROPERTIES:

-- COHESIVE SOIL
UNIT WEIGHT = 120 PCF
COHESION = 1000 PSF
-- GRANULAR SOIL
UNIT WEIGHT = 120 PCF
INTERNAL FRICTION ANGLE = 28 DEGREES

IF SITE CONDITIONS ARE ENCOUNTERED THAT DIFFER FROM THOSE SPECIFIED ABOVE, THE ENGINEER SHALL BE CONTACTED. SUCH CONDITIONS ARE, BUT NOT LIMITED TO, AS FOLLOWS:

-- SOIL HAS HIGH ORGANIC CONTENT OR CONSISTS OF SATURATED SILT AND CLAY.
-- THE SITE WON'T SUPPORT THE WEIGHT OF THE DRILLING RIG.
-- ROCK IS ENCOUNTERED.

DRILLED SHAFTS SHALL BE CONSTRUCTED ACCORDING TO THE OKLAHOMA DEPARTMENT OF TRANSPORTATION'S STANDARD SPECIFICATIONS FOR HIGHWAY CONSTRUCTION AND ASSOCIATED SPECIAL PROVISIONS. THE USE OF THE "DOUBLE CASING METHOD" IS NOT ALLOWED FOR THIS DESIGN.

THE CONTRACTOR SHALL BE RESPONSIBLE FOR CONFIRMING THAT THE LOCATION AND ELEVATION OF THE DRILLED SHAFT ARE AS REQUIRED IN THE PLANS. THE CONTRACTOR SHALL COORDINATE WITH THE MONOTUBE SUPPLIER TO ENSURE THAT THE ORIENTATION OF THE ANCHOR BOLTS IN THE DRILLED SHAFT ALLOW FOR PROPER ALIGNMENT OF ALL BASE PLATES AND FLANGES UPON FINAL INSTALLATION.

BARRIER CAP QUANTITIES
(INCLUDED IN CONTRACT UNIT PRICE OF DRILLED SHAFT)

ITEM	UNIT	QTY.
CLASS AA CONCRETE	CY	12.50
REINFORCING STEEL	LB	270.00

BARRIER CAP BAR LIST
(INCLUDED IN CONTRACT UNIT PRICE OF DRILLED SHAFT)

MARK	SIZE	NO.	FORM	LENGTH
PLAIN REINFORCING BARS				
L	#5	7	STR	8'-8"
V	#5	20	BNT	9'-11"

DRILLED SHAFT BAR LIST
(INCLUDED IN CONTRACT UNIT PRICE OF DRILLED SHAFT)

MARK	SIZE	NO.	FORM	LENGTH
PLAIN REINFORCING BARS				
DS	W20	1	BNT	1,156'-6"
DV	#11	22	STR	39'-1"

BASIS OF PAYMENT

ITEM NO.	DESCRIPTION	UNIT
516(A)	DRILLED SHAFTS 60" DIAMETER	L.F.

(2) ALL COSTS OF CONCRETE AND REINFORCING IN DRILLED SHAFTS SHALL BE INCLUDED IN THE PRICE BID FOR "DRILLED SHAFTS 60" DIAMETER". ALL COSTS OF CONCRETE AND REINFORCING IN THE BARRIER CAP SHALL BE INCLUDED IN THE PRICE BID FOR "DRILLED SHAFTS 60" DIAMETER".

MONOTUBE STRUCTURE (DRILLED SHAFT DETAILS) (SHEET 2 OF 3)

Design	JG	JW
Detail	JG	JW
Check	JG	JW

Supvr: SUPERVISOR
Engr. ENGINEER

STATE OF OKLAHOMA | DEPARTMENT OF TRANSPORTATION
JOB PIECE NO. 09032(17) | SHEET NO. M6

REVISIONS		
REV. NO.	DESCRIPTION	DATE

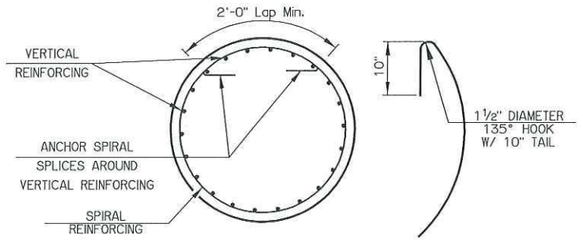

SPIRAL REINFORCING SPLICE DETAIL

NOTE: SPIRAL BAR LENGTH QUANTITY DOES NOT INCLUDE LAP. IF LAP IS REQUIRED, THE LENGTH OF THE LAP SHALL BE AS SHOWN.

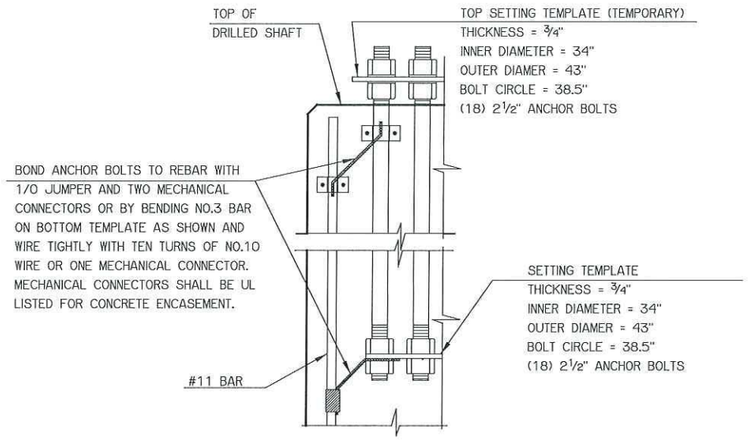

ANCHOR BOLT TEMPLATE AND
LIGHTING PROTECTION SYSTEM

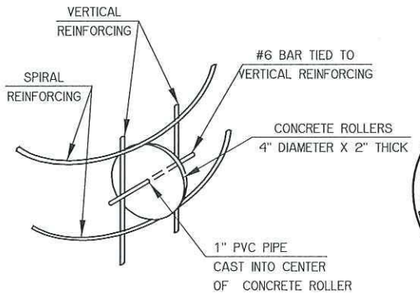

ROLLER INSTALLATION

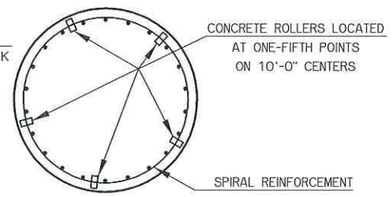

ROLLER PLACEMENT

DETAIL OF CONCRETE ROLLERS

NOTE: CONCRETE USED IN THE CONCRETE ROLLERS SHALL HAVE A MINIMUM 28 DAY COMPRESSIVE STRENGTH OF 4,000 P.S.I. SLAB BOLSTERS, HIGH CHAIRS, AND PLASTIC ROLLERS SHALL NOT BE SUBSTITUTED FOR THE CONCRETE ROLLERS.

MONOTUBE STRUCTURE
(DRILLED SHAFT DETAILS)
(SHEET 3 OF 3)

Design	JG	JW
Detail	JG	JW
Check	JG	JW
Squad: SUPERVISOR		
Engr. ENGINEER		

STATE OF OKLAHOMA | DEPARTMENT OF TRANSPORTATION
JOB PIECE NO. 09032(17) | SHEET NO. M7

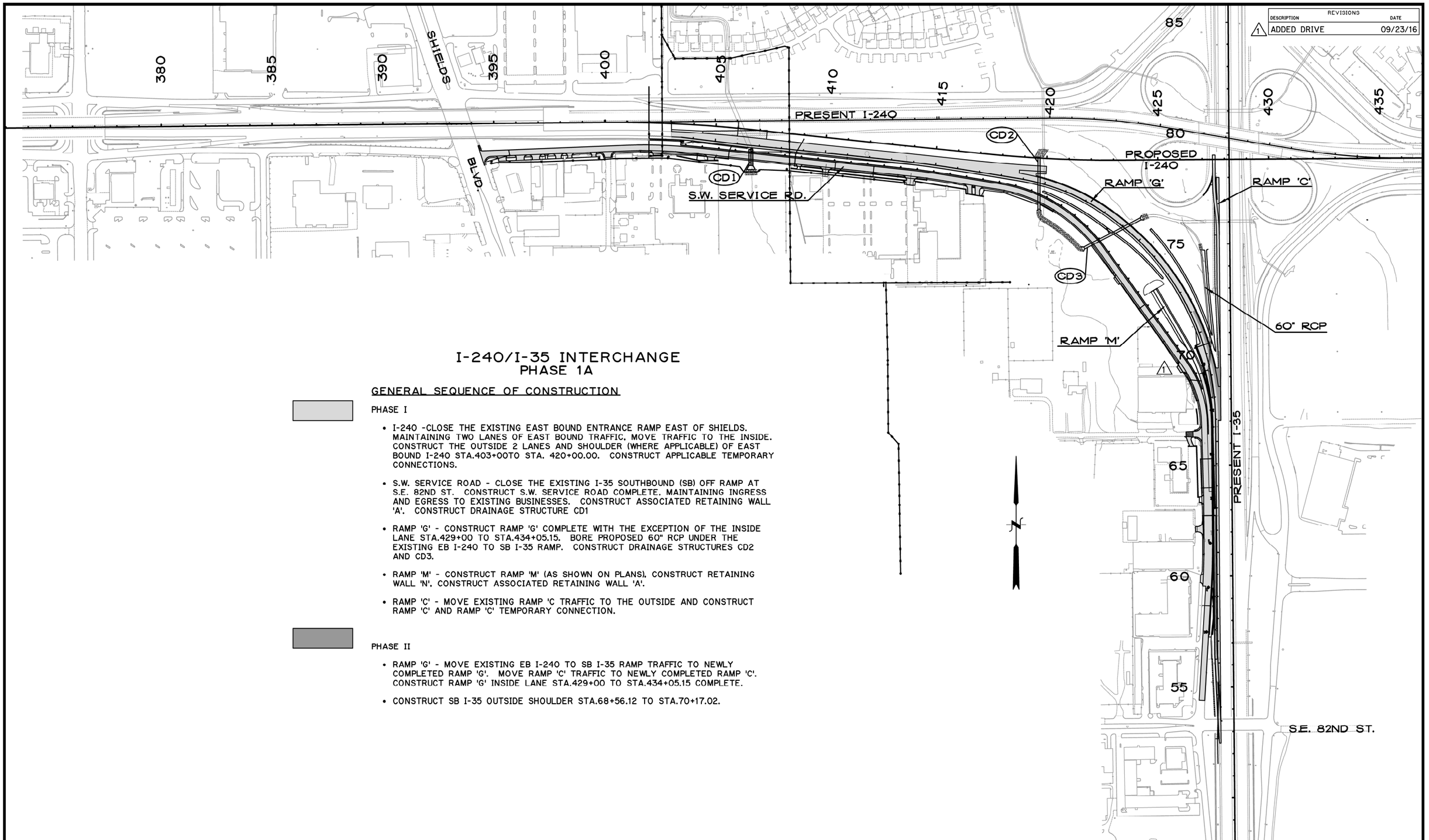

REVISIONS

	DESCRIPTION	DATE
1	ADDED DRIVE	09/23/16

I-240/I-35 INTERCHANGE
PHASE 1A

GENERAL SEQUENCE OF CONSTRUCTION

PHASE I

- I-240 -CLOSE THE EXISTING EAST BOUND ENTRANCE RAMP EAST OF SHIELDS. MAINTAINING TWO LANES OF EAST BOUND TRAFFIC. MOVE TRAFFIC TO THE INSIDE. CONSTRUCT THE OUTSIDE 2 LANES AND SHOULDER (WHERE APPLICABLE) OF EAST BOUND I-240 STA.403+00TO STA. 420+00.00. CONSTRUCT APPLICABLE TEMPORARY CONNECTIONS.
- S.W. SERVICE ROAD - CLOSE THE EXISTING I-35 SOUTHBOUND (SB) OFF RAMP AT S.E. 82ND ST. CONSTRUCT S.W. SERVICE ROAD COMPLETE. MAINTAINING INGRESS AND EGRESS TO EXISTING BUSINESSES. CONSTRUCT ASSOCIATED RETAINING WALL 'A'. CONSTRUCT DRAINAGE STRUCTURE CD1
- RAMP 'G' - CONSTRUCT RAMP 'G' COMPLETE WITH THE EXCEPTION OF THE INSIDE LANE STA.429+00 TO STA.434+05.15. BORE PROPOSED 60" RCP UNDER THE EXISTING EB I-240 TO SB I-35 RAMP. CONSTRUCT DRAINAGE STRUCTURES CD2 AND CD3.
- RAMP 'M' - CONSTRUCT RAMP 'M' (AS SHOWN ON PLANS), CONSTRUCT RETAINING WALL 'N', CONSTRUCT ASSOCIATED RETAINING WALL 'A'.
- RAMP 'C' - MOVE EXISTING RAMP 'C TRAFFIC TO THE OUTSIDE AND CONSTRUCT RAMP 'C' AND RAMP 'C' TEMPORARY CONNECTION.

PHASE II

- RAMP 'G' - MOVE EXISTING EB I-240 TO SB I-35 RAMP TRAFFIC TO NEWLY COMPLETED RAMP 'G'. MOVE RAMP 'C' TRAFFIC TO NEWLY COMPLETED RAMP 'C'. CONSTRUCT RAMP 'G' INSIDE LANE STA.429+00 TO STA.434+05.15 COMPLETE.
- CONSTRUCT SB I-35 OUTSIDE SHOULDER STA.68+56.12 TO STA.70+17.02.

Design		
Drawn		
Checked		
Approved		
Squad	POE	

GENERAL SEQUENCE OF CONSTRUCTION

State Job No. 09032(17) Sheet No. TC1

SEPT 23, 2016 - 14:49:15
H:\PROJECTS\2789_CrossRoads_InterX_New\PHASE IA\Roadway\Drawings\2789-SEQUENCE-1A.DWG

SEC. 28, T-11-N, R-3-W

REVISIONS	
DESCRIPTION	DATE

50' 0 50' 100'

Horizontal Scale in Feet

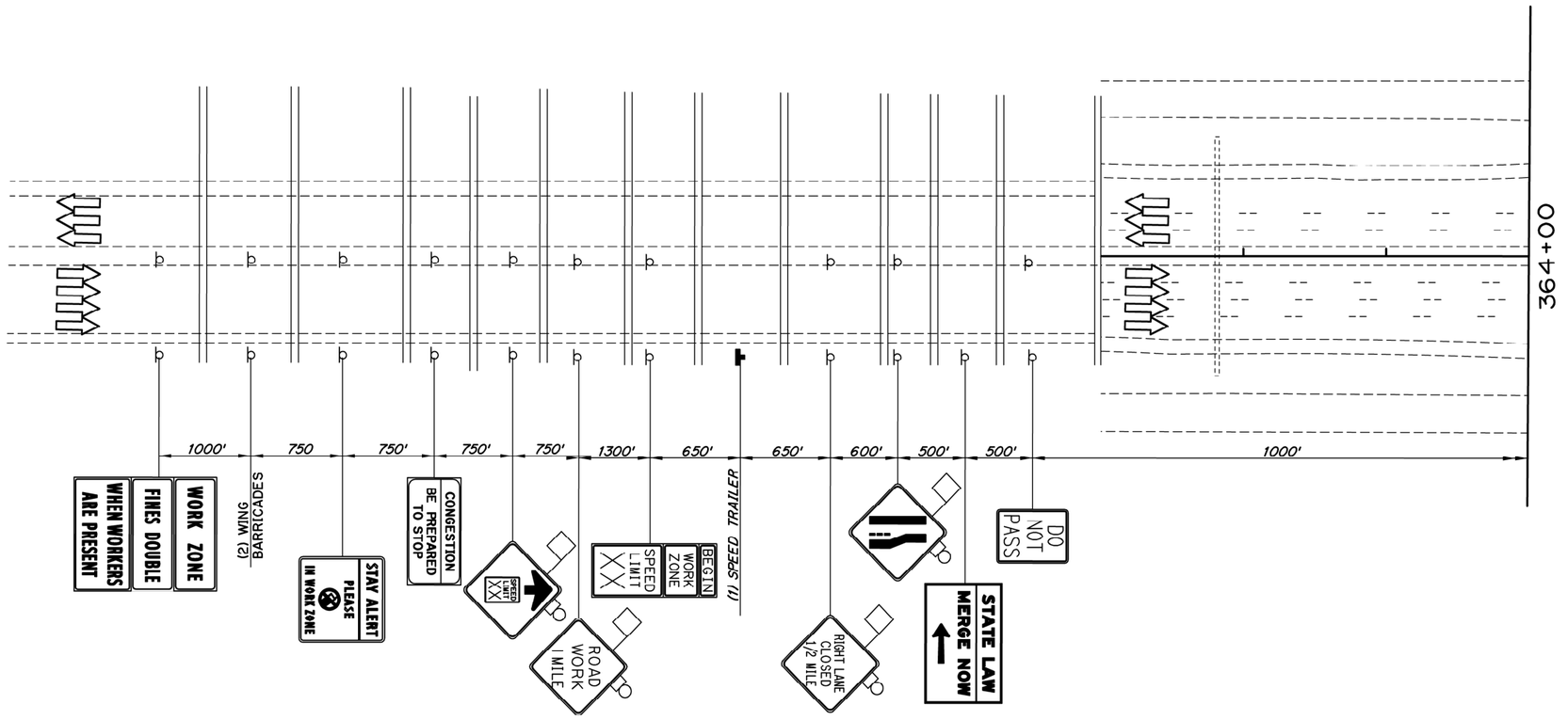

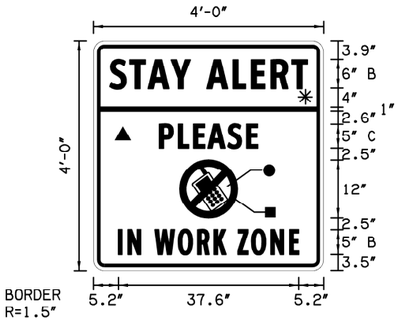

COLOR:
LEGEND, SYMBOL AND BORDER:
BLACK (NON-REFLECTORIZED)
BACKGROUND:
▲ FLUORESCENT ORANGE (REFLECTORIZED)
✳ FLUORESCENT YELLOW (REFLECTORIZED)
● WHITE (REFLECTORIZED)
■ RED (NON-REFLECTORIZED)

SEC. 33, T-11-N, R-3-W

Design		
Drawn		
Checked		
Approved		
Squad	POE	

TRAFFIC CONTROL PLAN
PHASE I, STEP 1
1 OF 10

State Job No. 09032(17) Sheet No. TC2

SEPT 08, 2016 - 07:07:20
H:\PROJECTS\2789_CrossRoads_InterX_New\PHASE IA\Roadway\Drawings\TC_PHASE1_SHT1.DWG

REVISIONS	
DESCRIPTION	DATE

SEC. 28, T-11-N, R-3-W

SEC. 27, T-11-N, R-3-W

50' 0 50' 100'
Horizontal Scale in Feet

375

SANTA FE AVE.

364+00

379+00

℄ I-240

(19) DRUMS @ 45' C/C
(10) CW1-8(L)

4" DASHED WHITE EDGE LINE

4" SOLID YELLOW EDGE LINE

TYPE 'C' ARROW PANEL *

4" SOLID WHITE EDGE LINE

720' TAPER

150' SHIFTING TAPER

1000'

* (1) TYPE III BARRICADE
(1) R11-2 (LANE)
(2) TYPE 'A' LIGHTS

WORK ZONE
SPEED LIMIT XX

ADD CS-14F AND R2-1F(XX) SIGNS EVERY 1/2 MILE THRU WORK ZONE (ALL PHASES)

SEC. 34, T-11-N, R-3-W

SEC. 33, T-11-N, R-3-W

Design		
Drawn		
Checked		
Approved		
Squad	POE	

TRAFFIC CONTROL PLAN PHASE I, STEP 1 2 OF 10

State Job No. 09032(17) Sheet No. TC3

SEPT 08, 2016 - 07:18:32
H:\PROJECTS\2789_CrossRoads_InterX_New\PHASE IA\Roadway\Drawings\TC_PHASE1_SHT2.DWG

SEC. 27, T-11-N, R-3-W

REVISIONS	
DESCRIPTION	DATE

50' 0 50' 100'
Horizontal Scale in Feet

380

385

390

SHIELDS BLVD.

4" DASHED WHITE LANE LINE

4" SOLID YELLOW EDGE LINE

4" DASHED WHITE LANE LINE

379+00

394+00

EXISTING BARRIER

℄ I-240

4" SOLID WHITE EDGE LINE

360' BUFFER

(56) DRUMS @ 45' C/C

* ((1) TYPE III BARRICADE
(1) R11-2 (LANE)
(2) TYPE 'A' LIGHTS

AREA TO BE CONSTRUCTED DURING THIS PHASE

SEC. 34, T-11-N, R-3-W

Design		
Drawn		
Checked		
Approved		
Squad	POE	

TRAFFIC CONTROL PLAN
PHASE I, STEP 1
3 OF 10

State Job No. 09032(17) Sheet No. TC4

SEPT 08, 2016 - 07:20:35
H:\PROJECTS\2789_CrossRoads_InterX_New\PHASE IA\Roadway\Drawings\TC_PHASE1_SHT3.DWG

REVISIONS	
DESCRIPTION	DATE

SEC. 27, T-11-N, R-3-W

NOTE: SERVICE ROAD SHALL BE BUILT HALF AT A TIME. ONE LANE OF TRAFFIC SHALL BE MAINTAINED AT ALL TIMES.

50' 0 50' 100'
Horizontal Scale in Feet

BYERS AVE.

395 400 405

60 65 70

394+00

409+14.81

4" DASHED WHITE LANE LINE

EXISTING BARRIER

SAND FILLED IMPACT ATTENUATOR

850 L.F. PORTABLE LONGITUDINAL BARRIER

℄ PRESENT I-240

4" SOLID YELLOW EDGE LINE

4" SOLID WHITE EDGE LINE

℄ I-240

110

(19) DRUMS @ 45' C/C

✱ (1) TYPE III BARRICADE
(1) R11-2 (LANE)
(2) TYPE 'A' LIGHTS

AREA TO BE CONSTRUCTED DURING THIS PHASE

SEC. 34, T-11-N, R-3-W

Design		
Drawn		
Checked		
Approved		
Squad	POE	

TRAFFIC CONTROL PLAN
PHASE I, STEP 1
4 OF 10

State Job No. 09032(17) Sheet No. TC5

SEPT 08, 2016 - 07:27:30
H:\PROJECTS\2789_CrossRoads_InterX_New\PHASE IA\Roadway\Drawings\TC_PHASE1_SHT4.DWG

REVISIONS	
DESCRIPTION	DATE

SEC. 27, T-11-N, R-3-W

50' 0 50' 100'
Horizontal Scale in Feet

NOTE: SERVICE ROAD SHALL BE BUILT HALF AT A TIME. ONE LANE OF TRAFFIC SHALL BE MAINTAINED AT ALL TIMES.

4" DASHED WHITE LANE LINE

4" SOLID YELLOW EDGE LINE

℄ PRESENT I-240

EXISTING BARRIER

409+14.81

4" SOLID WHITE EDGE LINE

350 L.F. PORTABLE LONGITUDINAL BARRIER

410

415

420

424+00

END ROAD WORK

℄ I-240

96

98

98

98

AREA TO BE CONSTRUCTED DURING THIS PHASE

SEC. 34, T-11-N, R-3-W

Design		
Drawn		
Checked		
Approved		
Squad	POE	

TRAFFIC CONTROL PLAN
PHASE I, STEP 1
5 OF 10

State Job No. 09032(17) Sheet No. TC6

SEPT 07, 2016 - 15:06:33
H:\PROJECTS\2789_CrossRoads_InterX_New\PHASE IA\Roadway\Drawings\TC_PHASE1_SHT5.DWG

SEC. 27, T-11-N, R-3-W

REVISIONS	
DESCRIPTION	DATE

240' SHIFTING TAPER
4' SHIFT OOF I-35 TRAFFIC

℄ I-35

℄ I-240

℄ FUTURE I-240

EXISTING BARRIER

END ROAD WORK

SHIELDS BLVD.

1000'

424+00

439+00

425

430

435

A 425

A 430

A 435

08

75

SEC. 34, T-11-N, R-3-W

AREA TO BE CONSTRUCTED DURING THIS PHASE

50' 0 50' 100'
Horizontal Scale in Feet

Design		
Drawn		
Checked		
Approved		
Squad	POE	

TRAFFIC CONTROL PLAN
PHASE I, STEP 1
6 OF 10

State Job No. 09032(17) Sheet No. TC7

SEPT 08, 2016 - 07:33:38
H:\PROJECTS\2789_CrossRoads_InterX_New\PHASE IA\Roadway\Drawings\TC_PHASE1_SHT6.DWG

SEC. 27, T-11-N, R-3-W

REVISIONS	
DESCRIPTION	DATE

SE 82nd ST.

45

50

55

END ROAD WORK

℄ I-35

4" SOLID WHITE LANE LINE

4" DASHED WHITE LANE LINE

EXISTING BARRIER

900 L.F. PORTABLE LONGITUDINAL BARRIER

60+00.00

AREA TO BE CONSTRUCTED DURING THIS PHASE

SEC. 34, T-11-N, R-3-W

50' 0 50' 100'

Horizontal Scale in Feet

Design		
Drawn		
Checked		
Approved		
Squad	POE	

TRAFFIC CONTROL PLAN
PHASE I, STEP 1
7 OF 10

State Job No. 09032(17) Sheet No. TC8

SEPT 08, 2016 - 07:36:40
H:\PROJECTS\2789_CrossRoads_InterX_New\PHASE IA\Roadway\Drawings\TC_PHASE1_SHT7.DWG

REVISIONS		
	DESCRIPTION	DATE
1	ADDED DRIVE	09/23/16

NOTE: SERVICE ROAD SHALL BE BUILT HALF AT A TIME. ONE LANE OF TRAFFIC SHALL BE MAINTAINED AT ALL TIMES.

SEC. 27, T-11-N, R-3-W

STA. 60+00.00

STA. 75+00.00

℄ I-35

2325 L.F. PORTABLE LONGITUDINAL BARRIER

8" SOLID WHITE GORE LINE

EXISTING BARRIER

(6) DRUMS @ 45' C/C

4" DASHED WHITE LANE LINE

4" SOLID YELLOW EDGE LINE

4" SOLID WHITE EDGE LINE

AREA TO BE CONSTRUCTED DURING THIS PHASE

SEC. 34, T-11-N, R-3-W

50' 0 50' 100'

Horizontal Scale in Feet

Design		
Drawn		
Checked		
Approved		
Squad	POE	

TRAFFIC CONTROL PLAN
PHASE I, STEP 1
8 OF 10

State Job No. 09032(17) Sheet No. TC9

SEPT 23, 2016 - 14:13:49
H:\PROJECTS\2789_CrossRoads_InterX_New\PHASE IA\Roadway\Drawings\TC_PHASE1_SHT8.DWG

SEC. 27, T-11-N, R-3-W

REVISIONS	
DESCRIPTION	DATE

50' 0 50' 100'
Horizontal Scale in Feet

STA. 75+00.00

STA. 90+00.00

I-240

80

85

℄ I 35

END ROAD WORK

WORK ZONE SPEED LIMIT XX

(5) DRUMS @ 30' C/C

1200 L.F. PORTABLE LONGITUDINAL BARRIER

4" DASHED WHITE LANE LINE

240' SHIFTING TAPER
4' SHIFT OOF I-35 TRAFFIC

1000'

CZ IMPACT ATTENUATOR

EXISTING BARRIER

4" SOLID YELLOW EDGE LINE

4"SOLID WHITE EDGE LINE

TIE PORTABLE LONGITUDINAL BARRIER TO EXISTING BARRIER

(36) DRUMS @ 45' C/C
(4) CW1-8(L)

AREA TO BE CONSTRUCTED DURING THIS PHASE

SEC. 34, T-11-N, R-3-W

Design		
Drawn		
Checked		
Approved		
Squad	POE	

TRAFFIC CONTROL PLAN
PHASE I, STEP 1
9 OF 10

State Job No. 09032(17) Sheet No. TC10

SEPT 08, 2016 - 07:47:33
H:\PROJECTS\2789_CrossRoads_InterX_New\PHASE IA\Roadway\Drawings\TC_PHASE1_SHT9.DWG

SEC. 27, T-11-N, R-3-W

REVISIONS	
DESCRIPTION	DATE

50' 0 50' 100'

Horizontal Scale in Feet

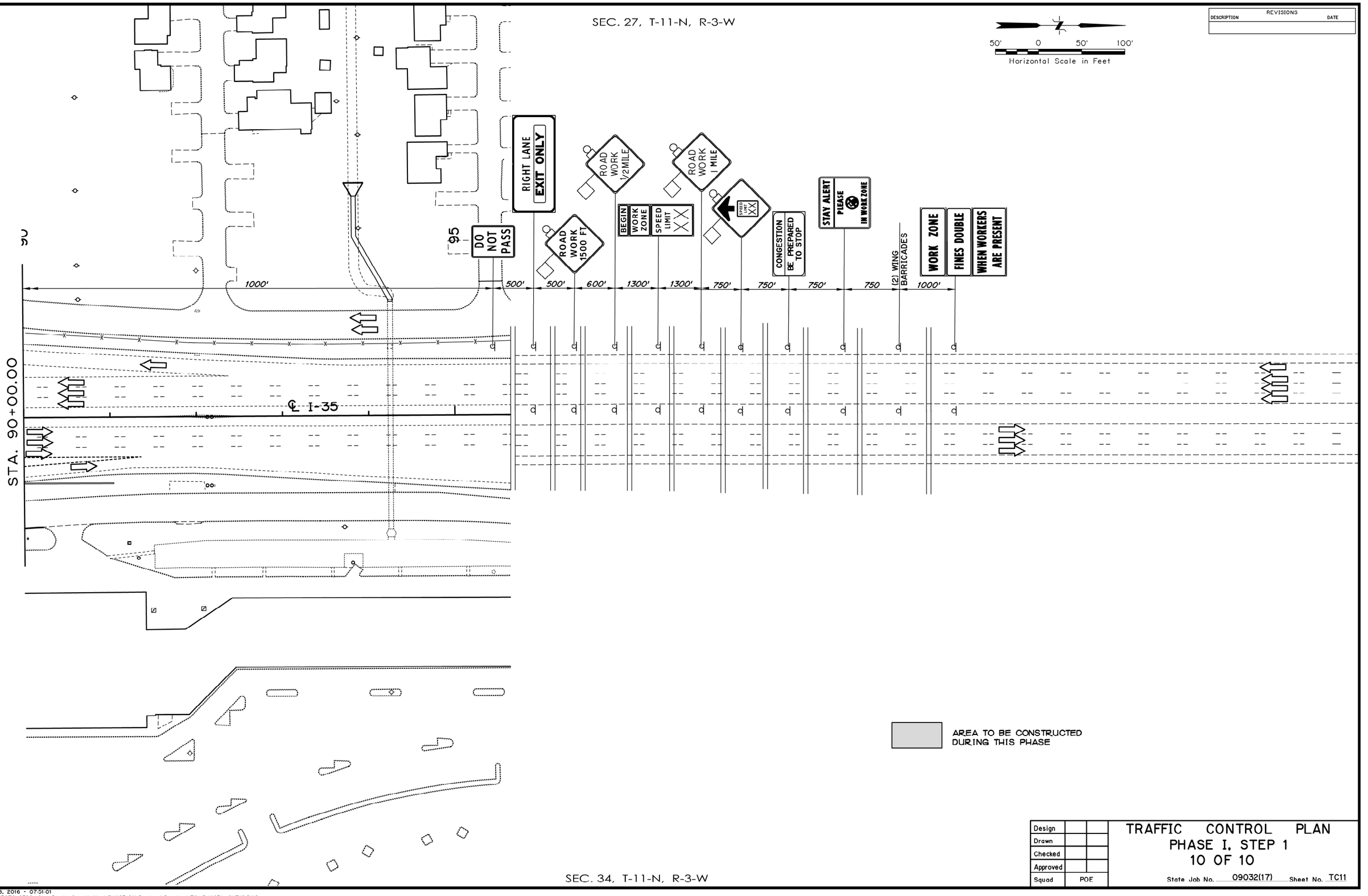

AREA TO BE CONSTRUCTED DURING THIS PHASE

SEC. 34, T-11-N, R-3-W

Design		
Drawn		
Checked		
Approved		
Squad	POE	

TRAFFIC CONTROL PLAN
PHASE I, STEP 1
10 OF 10

State Job No. 09032(17) Sheet No. TC11

SEPT 08, 2016 - 07:51:01
H:\PROJECTS\2789_CrossRoads_InterX_New\PHASE IA\Roadway\Drawings\TC_PHASE1_SHT10.DWG

REVISIONS	
DESCRIPTION	DATE

SEC. 28, T-11-N, R-3-W

SEC. 27, T-11-N, R-3-W

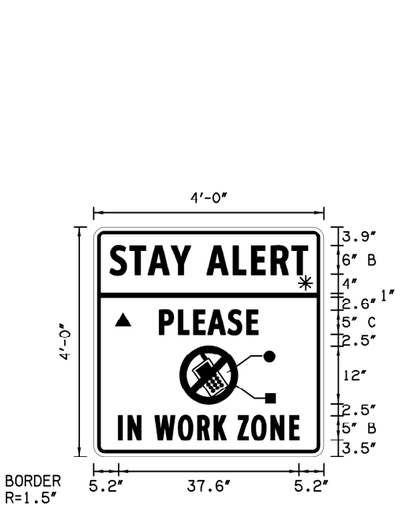

BORDER
R=1.5"
TH=0.75"
IN=0.75"

COLOR:
LEGEND, SYMBOL AND BORDER:
BLACK (NON-REFLECTORIZED)
BACKGROUND:
▲ FLUORESCENT ORANGE (REFLECTORIZED)
✳ FLUORESCENT YELLOW (REFLECTORIZED)
● WHITE (REFLECTORIZED)
■ RED (NON-REFLECTORIZED)

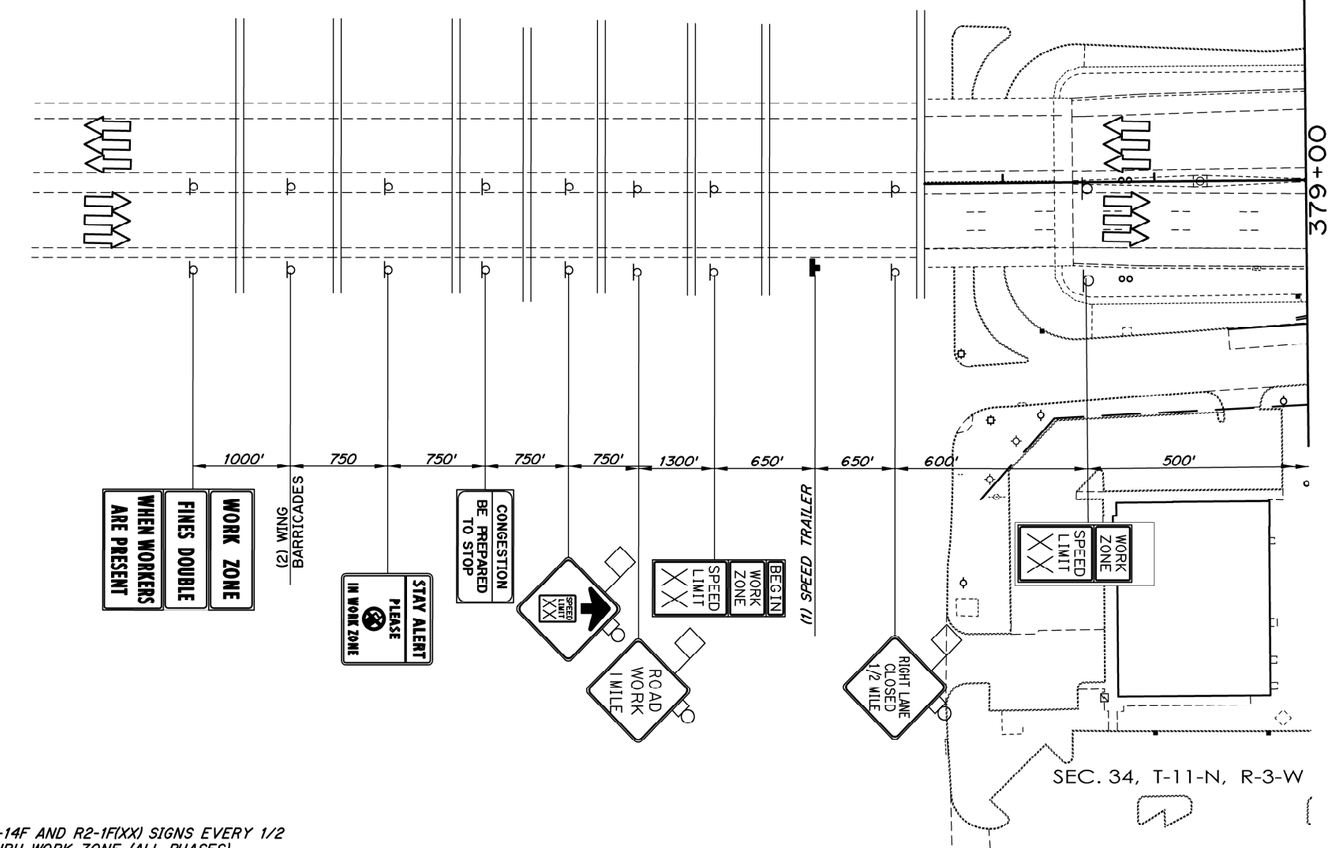

SEC. 34, T-11-N, R-3-W

WORK ZONE
SPEED LIMIT XX

ADD CS-14F AND R2-1F(XX) SIGNS EVERY 1/2 MILE THRU WORK ZONE (ALL PHASES)

SEC. 33, T-11-N, R-3-W

Design		
Drawn		
Checked		
Approved		
Squad	POE	

TRAFFIC CONTROL PLAN PHASE II 1 OF 8

State Job No. 09032(17) Sheet No. TC12

SEPT 08, 2016 - 07:53:04
H:\PROJECTS\2789_CrossRoads_InterX_New\PHASE IA\Roadway\Drawings\TC_PHASE2_SHT1.DWG

REVISIONS	
DESCRIPTION	DATE

SEC. 27, T-11-N, R-3-W

50' 0 50' 100'
Horizontal Scale in Feet

380

385

390

SHIELDS BLVD.

379+00

394+00

℄ I-240

380

385

500'

500'

1000'

RIGHT LANE CLOSED 1500 FT

RIGHT LANE EXIT ONLY

AREA TO BE CONSTRUCTED DURING THIS PHASE

SEC. 34, T-11-N, R-3-W

Design		
Drawn		
Checked		
Approved		
Squad	POE	

TRAFFIC CONTROL PLAN
PHASE II
2 OF 8

State Job No. 09032(17) Sheet No. TC13

SEPT 08, 2016 - 07:54:43
H:\PROJECTS\2789_CrossRoads_InterX_New\PHASE IA\Roadway\Drawings\TC_PHASE2_SHT2.DWG

REVISIONS	
DESCRIPTION	DATE

SEC. 27, T-11-N, R-3-W

50' 0 50' 100
Horizontal Scale in Feet

395

400

BYERS AVE.

405

394+00

409+14.81

℄ PRESENT I-240

℄ I-240

℄ SW SERVICE RD.

4" SOLID WHITE EDGE LINE

4" SOLID YELLOW EDGE LINE

4" SOLID WHITE EDGE LINE

(6) WHITE ARROWS

(2) WHITE WORD (MERGE)

1000'

EXIT

(39) DRUMS @ 45' C/C

SPEED LIMIT XX

WORK ZONE

AREA TO BE CONSTRUCTED DURING THIS PHASE

SEC. 34, T-11-N, R-3-W

Design		
Drawn		
Checked		
Approved		
Squad	POE	

TRAFFIC CONTROL PLAN
PHASE II
3 OF 8

State Job No. 09032(17) Sheet No. TC14

SEPT 08, 2016 - 08:54:54
H:\PROJECTS\2789_CrossRoads_InterX_New\PHASE IA\Roadway\Drawings\TC_PHASE2_SHT3.DWG

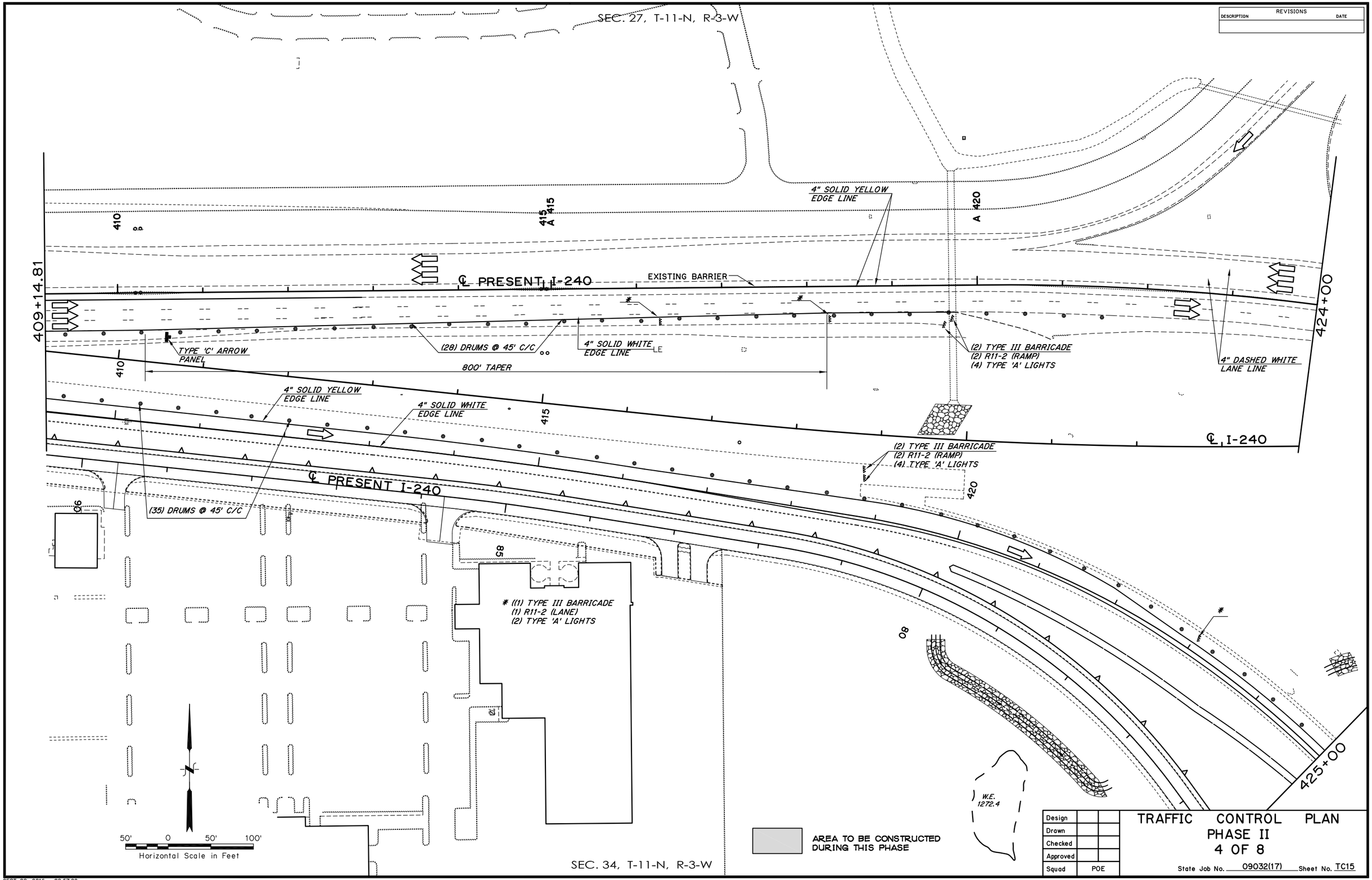

Design		
Drawn		
Checked		
Approved		
Squad	POE	

TRAFFIC CONTROL PLAN
PHASE II
4 OF 8

State Job No. 09032(17) Sheet No. TC15

SEPT 08, 2016 - 08:57:22
H:\PROJECTS\2789_CrossRoads_InterX_New\PHASE IA\Roadway\Drawings\TC_PHASE2_SHT4.DWG

SEC. 27, T-11-N, R-3-W

REVISIONS	
DESCRIPTION	DATE

SE 82nd ST.

45

END ROAD WORK

50

55

4" DOTTED WHITE LANE LINE

℄ I-35

EXISTING BARRIER

00+00.09

AREA TO BE CONSTRUCTED DURING THIS PHASE

50' 0 50' 100'

Horizontal Scale in Feet

SEC. 34, T-11-N, R-3-W

Design		
Drawn		
Checked		
Approved		
Squad	POE	

TRAFFIC CONTROL PLAN
PHASE II
5 OF 8

State Job No. 09032(17) Sheet No. TC16

SEPT 08, 2016 - 08:59:06
H:\PROJECTS\27789_CrossRoads_InterX_New\PHASE IA\Roadway\Drawings\TC_PHASE2_SHT5.DWG

REVISIONS		
	DESCRIPTION	DATE
1	ADDED DRIVE	09/23/16

SEC. 27, T-11-N, R-3-W

SE 82nd ST.

65

70

75

425+00

STA. 60+00.00

STA. 75+00.00

℄ I-35

4" DOTTED WHITE LANE LINE

8" SOLID WHITE GORE LINE

(15) DRUMS @ 45' C/C

4" SOLID WHITE EDGE LINE

(8) DRUMS @ 45' C/C

SAND FILLED IMPACT ATTENUATOR

PAVEMENT MARKING ARROW

1200 L.F. PORTABLE LONGITUDINAL BARRIER

SAND FILLED IMPACT ATTENUATOR

450

EXISTING BARRIER

4" DASHED WHITE LANE LINE

4" SOLID YELLOW EDGE LINE

4" SOLID WHITE EDGE LINE

AREA TO BE CONSTRUCTED DURING THIS PHASE

SEC. 34, T-11-N, R-3-W

50' 0 50' 100'

Horizontal Scale in Feet

Design		
Drawn		
Checked		
Approved		
Squad	POE	

TRAFFIC CONTROL PLAN PHASE II 6 OF 8

State Job No. 09032(17) Sheet No. TC17

SEPT 23, 2016 - 13:58:06
H:\PROJECTS\2789_CrossRoads_InterX_New\PHASE IA\Roadway\Drawings\TC_PHASE2_SHT6.DWG

SEC. 27, T-11-N, R-3-W

50' 0 50' 100'
Horizontal Scale in Feet

REVISIONS	
DESCRIPTION	DATE

(3) DRUMS @ 45' C/C

4" SOLID WHITE EDGE LINE

PAVEMENT MARKING ARROW

4" SOLID WHITE EDGE LINE

℄ PRESENT I-240

80

85

WORK ZONE
SPEED LIMIT XX

240' SHIFTING TAPER

1000'

4" DASHED WHITE LANE LINE

(53) DRUM @ 45' C/C
(4) CW1-8

STA. 75+00.00

℄ I 35

STA. 90+00.00

EXISTING BARRIER

4" SOLID YELLOW EDGE LINE

4"SOLID WHITE EDGE LINE

AREA TO BE CONSTRUCTED DURING THIS PHASE

WORK ZONE
SPEED LIMIT XX

SEC. 34, T-11-N, R-3-W

Design		
Drawn		
Checked		
Approved		
Squad	POE	

TRAFFIC CONTROL PLAN
PHASE II
7 OF 8

State Job No. 09032(17) Sheet No. TC18

SEPT 08, 2016 - 09:06:49
H:\PROJECTS\2789_CrossRoads_InterX_New\PHASE IA\Roadway\Drawings\TC_PHASE2_SHT7.DWG

SEC. 27, T-11-N, R-3-W

REVISIONS	
DESCRIPTION	DATE

50' 0 50' 100'

Horizontal Scale in Feet

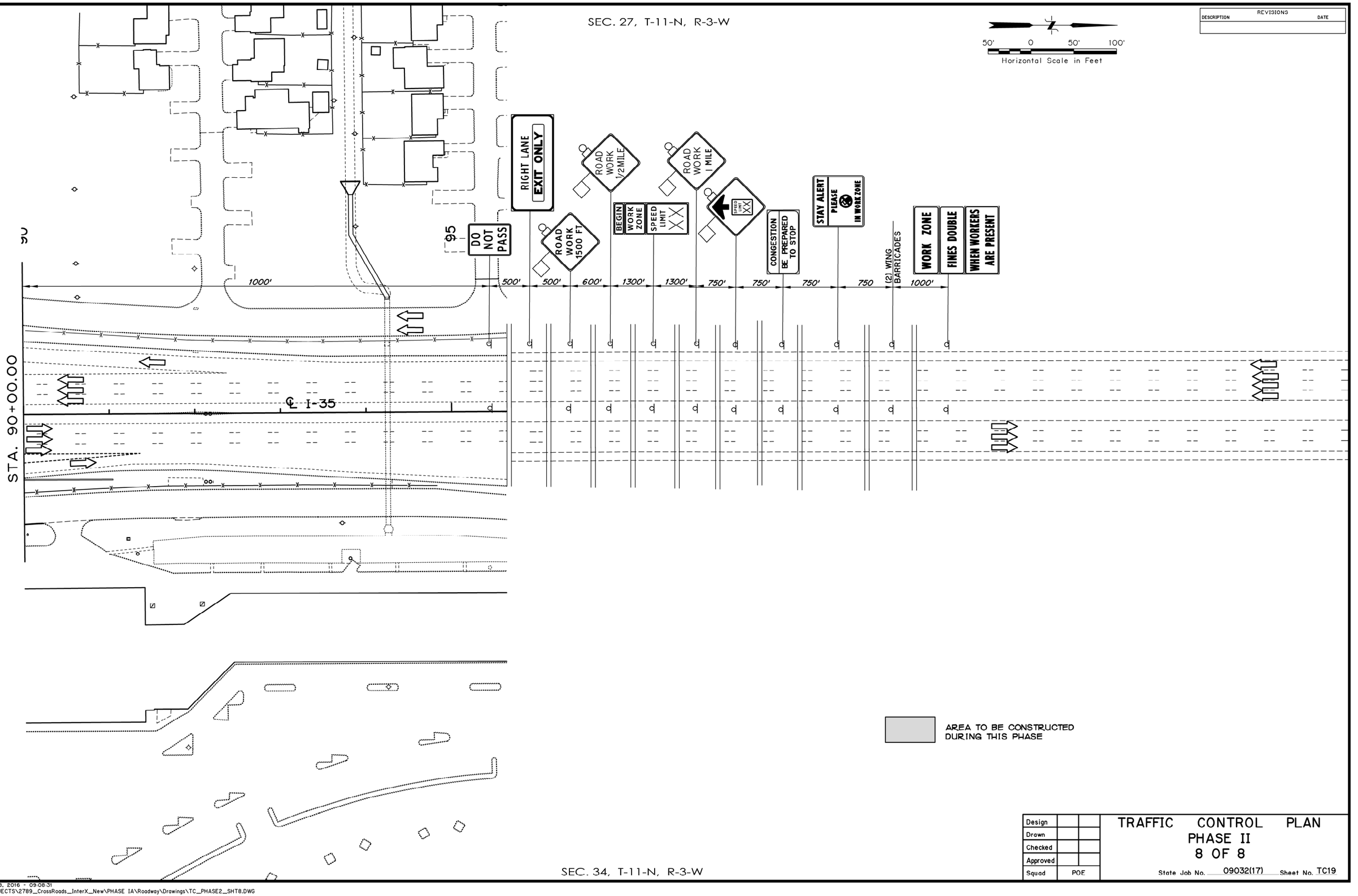

AREA TO BE CONSTRUCTED DURING THIS PHASE

SEC. 34, T-11-N, R-3-W

Design		
Drawn		
Checked		
Approved		
Squad	POE	

TRAFFIC CONTROL PLAN
PHASE II
8 OF 8

State Job No. 09032(17) Sheet No. TC19

SEPT 08, 2016 - 09:08:31
H:\PROJECTS\2789_CrossRoads_InterX_New\PHASE IA\Roadway\Drawings\TC_PHASE2_SHT8.DWG

REVISIONS	
DESCRIPTION	DATE

300 0 300' 600'
Horizontal Scale in Feet

ALL SIGNS SHOWN SHALL BE CONSTRUCTED AT TIME OF SB EXIT RAMP TO 82nd ST. IS CLOSED AND SHALL REMAIN IN PLACE UPON COMPLETION OF PROJECT

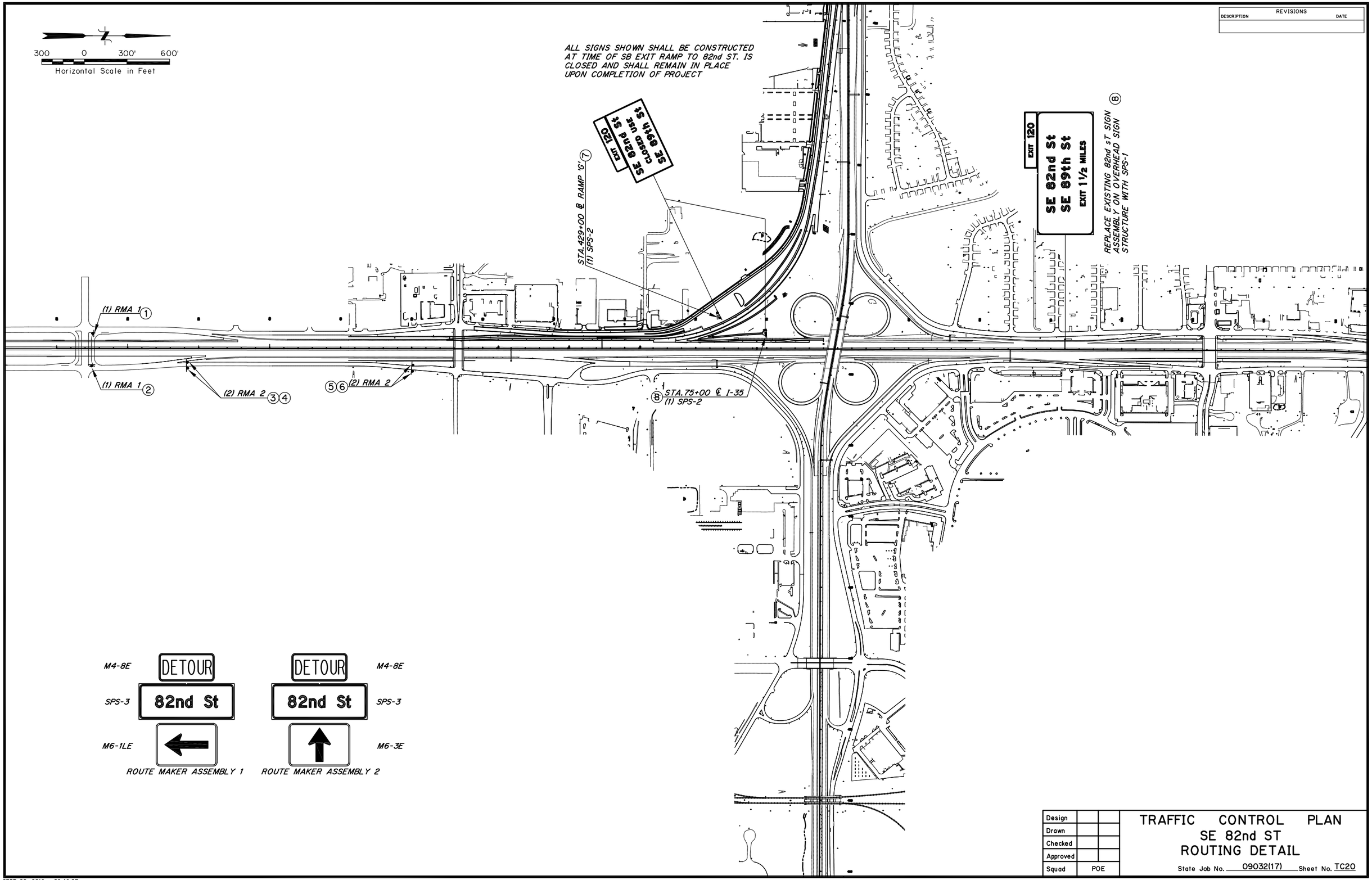

M4-8E DETOUR
SPS-3 82nd St
M6-1LE

ROUTE MAKER ASSEMBLY 1

DETOUR M4-8E
82nd St SPS-3
M6-3E

ROUTE MAKER ASSEMBLY 2

Design		
Drawn		
Checked		
Approved		
Squad	POE	

TRAFFIC CONTROL PLAN
SE 82nd ST
ROUTING DETAIL

State Job No. 09032(17) Sheet No. TC20

SEPT 08, 2016 - 09:46:03
H:\PROJECTS\2789_CrossRoads_InterX_New\PHASE IA\Roadway\Drawings\TC-ROUTING_DETAIL.DWG

SIGN DETAIL
1:80

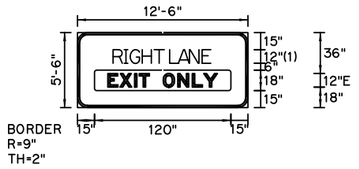

FONT:
(1) ClearviewHwy-2-B

Panel Style: guide_exp_advance_a.ssi
M.U.T.C.D.: 2009 Edition

SIGN NUMBER	TCS-1
WIDTH x HGHT.	12'-6" x 5'-6"
BORDER WIDTH	18"
CORNER RADIUS	0"
MOUNTING	Ground
BACKGROUND	TYPE: Reflective
	COLOR: Green
LEGEND/BORDER	TYPE: Reflective
	COLOR: White/Black

SYMBOL	X	Y	WID	HT

Dimensions are in inches.tenths Letter locations are panel edge to lower left corner

LETTER POSITIONS (X)

R	I	G	H	T		L	A	N	E												LENGTH	SERIES/SIZE
																						ClearviewHwy-2-B
33	42.8	47.8	58.7	68.1	74.5	82.8	89.4	100.3	111.4												83.9	12
E	X	I	T		O	N	L	Y														E 2000
26.7	37.4	50.2	54.4	63.4	75.4	88.3	101.1	111.1													96.6	12

SIGN DETAIL
1:120

Panel Style: tab1.bsi
M.U.T.C.D.: 2009 Edition

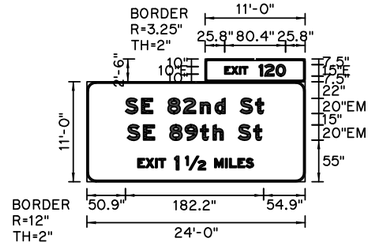

SIGN NUMBER	SPS-1
WIDTH x HGHT.	24'-0" x 11'-0"
BORDER WIDTH	2"
CORNER RADIUS	3.25"
MOUNTING	Overhead
BACKGROUND	TYPE: Reflective
	COLOR: Green
LEGEND/BORDER	TYPE: Reflective
	COLOR: White

SYMBOL	X	Y	WID	HT

Panel Style: guide_exp_advance_a.ssi
M.U.T.C.D.: 2009 Edition

Dimensions are in inches.tenths Letter locations are panel edge to lower left corner

LETTER POSITIONS (X)

E	X	I	T	1	2	0															LENGTH	SERIES/SIZE
																						E 2000
25.8	34.7	45.4	48.9	71.4	78.9	93.6															80.4	10,15
S	E		8	2	n	d		S	t													EM 2000
50.9	72.1	86.9	106.9	127.3	149.7	169.1	182.3	202.3	222.7												182.2	20/15
S	E		8	9	t	h		S	t													EM 2000
53.4	74.6	89.4	109.4	129.6	149.8	166.6	179.8	199.8	220.2												177.2	20/15
E	X	I	T	1	1/2	M	I	L	E	S												E 2000
67.2	77.8	90.7	94.9	115.9	130.3	168.6	183	188.3	199.4	210											152.6	12,18

SIGN DETAIL
1:120

Panel Style: tab1.bsi
M.U.T.C.D.: 2009 Edition

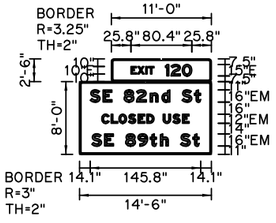

SIGN NUMBER	SPS-2
WIDTH x HGHT.	14'-6" x 8'-0"
BORDER WIDTH	2"
CORNER RADIUS	3.25"
MOUNTING	Ground
BACKGROUND	TYPE: Reflective
	COLOR: Green
LEGEND/BORDER	TYPE: Reflective
	COLOR: White

SYMBOL	X	Y	WID	HT

Panel Style: guide_con_distance.ssi
M.U.T.C.D.: 2009 Edition

Dimensions are in inches.tenths Letter locations are panel edge to lower left corner

LETTER POSITIONS (X)

E	X	I	T	1	2	0															LENGTH	SERIES/SIZE
																						E 2000
25.8	34.7	45.4	48.9	71.4	78.9	93.6															80.4	10,15
S	E		8	2	n	d		S	t													EM 2000
14.1	31.1	42.9	58.9	75.2	93.2	108.7	119.2	135.2	151.6												145.8	16/12
C	L	O	S	E	D		U	S	E													EM 2000
29.3	41.6	52	64.6	77.3	88.7	98.4	110.4	123.1	135.8												115.4	12
S	E		8	9	t	h		S	t													EM 2000
16.1	33.1	44.9	60.9	77.1	93.2	106.7	117.2	133.2	149.6												141.8	16/12

SIGN DETAIL
1:40

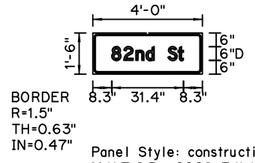

Panel Style: construction_guide.ssi
M.U.T.C.D.: 2009 Edition

SIGN NUMBER	SPS-3
WIDTH x HGHT.	4'-0" x 1'-6"
BORDER WIDTH	0.63"
CORNER RADIUS	0"
MOUNTING	Ground
BACKGROUND	TYPE: Reflective
	COLOR: Orange
LEGEND/BORDER	TYPE: Reflective
	COLOR: Black

SYMBOL	X	Y	WID	HT

Dimensions are in inches.tenths Letter locations are panel edge to lower left corner

LETTER POSITIONS (X)

8	2	n	d		S	t															LENGTH	SERIES/SIZE
																						D 2000
8.3	13.6	18.8	23.3	26.9	32.9	37.3															31.4	6/4.5

REVISIONS	
DESCRIPTION	DATE

Design		
Drawn		
Checked		
Approved		
Squad	POE	

TRAFFIC CONTROL PLAN
SPECIAL SIGN DETAILS

State Job No. 09032(17) Sheet No. TC21

SEPT 08, 2016 - 09:31:10
H:\PROJECTS\2789_CrossRoads_InterX_New\PHASE IA\Roadway\Drawings\TC_SPEC_SIGNS.DWG

ESTIMATED QUANTITIES

ITEM NO.	SPEC NO.	DESCRIPTION	UNIT	TOTAL QUANTITY	AS-BUILT QUANTITY
1	505	12-INCH PVC, WATERLINE PIPE, PUSH-ON JOINT, NOM. WALL THK 0.34	LF	2784	
2	505	12" X 12" X6" TEE W/ REST JT. & CONC.THRUST BLOCK	EA	7	
3	505	12" X 12" X12" TEE W/ REST JT. & CONC.THRUST BLOCK	EA	2	
4	505	12-INCH D.I.P. 45° BEND W/ REST JT. & CONC. THRUST BLOCK	EA	10	
5	505	12-INCH D.I.P. 90° BEND W/ REST JT. & CONC. THRUST BLOCK	EA	3	
6	505	12-INCH D.I.P. 11.25° BEND W/ REST JT. & CONC. THRUST BLOCK	EA	3	
7	505	12" X 10" REDUCER W/ REST JT.	EA	1	
8	505	12" X 6" REDUCER W/ REST JT.	EA	1	
9	505	12-INCH PLUG W/ REST JT	EA	2	
10	505	10-INCH PLUG W/ REST JT	EA	1	
11	505	6-INCH PLUG W/ REST JT	EA	1	
12	505	12-INCH CAP	EA	2	
13	505	10-INCH CAP	EA	1	
14	505	6-INCH CAP	EA	1	
15	510	WATER SERVICE LINE CONNECTION	EA	10	
16	512	METER RELOCATION 1-INCH	EA	10	
17	514	12-INCH TAP	EA	3	
18	514	10-INCH TAP	EA	1	
19	514	6-INCH TAP	EA	1	
20	516	FIRE HYDRANT	EA	7	
21	516	12-INCH FIRE HYDRANT RISERS	EA	16	
22	517	REMOVAL OF FIRE HYDRANT	EA	6	
23	520	12-INCH GATE VALVE AND VALVE BOX	EA	2	
24	520	6-INCH GATE VALVE AND VALVE BOX	EA	7	
25	520	12-INCH TAPPING VALVE AND VALVE BOX	EA	3	
26	520	10-INCH TAPPING VALVE AND VALVE BOX	EA	1	
27	520	6-INCH TAPPING VALVE AND VALVE BOX	EA	1	
28	522	HYDROSTATIC PRESSURE TESTING AND DISINFECTION, DECHLORINATION & DISPOSAL OF			
		NEUTRALIZED CHLORINATED WATER	LS	1	
29	532	12-INCH TAPPING SLEEVE	EA	3	
30	532	10-INCH TAPPING SLEEVE	EA	1	
31	532	6-INCH TAPPING SLEEVE	EA	1	
32	252	BORING FOR 12-INCH WATER LINE	LF	319	
33	528	STEEL CASING FOR 12-INCH WATER LINE	LF	319	
34	827	METAL BOLLARD	EA	12	
35	840	SOLID SLAB SODDING	SY	560	
36	801	CONSTRUCTION STAKING (CONSTRUCTION SURVEY)	LS	1	
37	802	CONSTRUCTION SIGNING AND TRAFFIC CONTROL	LS	1	
38	810	CLEARING AND GRUBBING	LS	1	
39	814	PAVING CUT AND PERMANENT REPAIR (CONCRETE)	SY	52	
40	813	REMOVE AND REPLACE CONCRETE DRIVEWAY	SY	54	
41	817	REMOVE AND REPLACE PARKING LOT CONCRETE PAVEMENT	SY	1896	
42	816	REMOVE & REPLACE SIDEWALK	SY	20	
43	109.08	PRE-CONSTRUCTION AUDIO-VIDEO RECORDING (DVD) (2 SETS)	LS	1	
44	109.08	POST-CONSTRUCTION AUDIO-VIDEO RECORDING (DVD)(2 SETS)	LS	1	
45	109.09	SEDIMENT AND EROSION CONTROL	LS	1	
46	SPECIAL	GPS AS-BUILT SURVEY	LS	1	

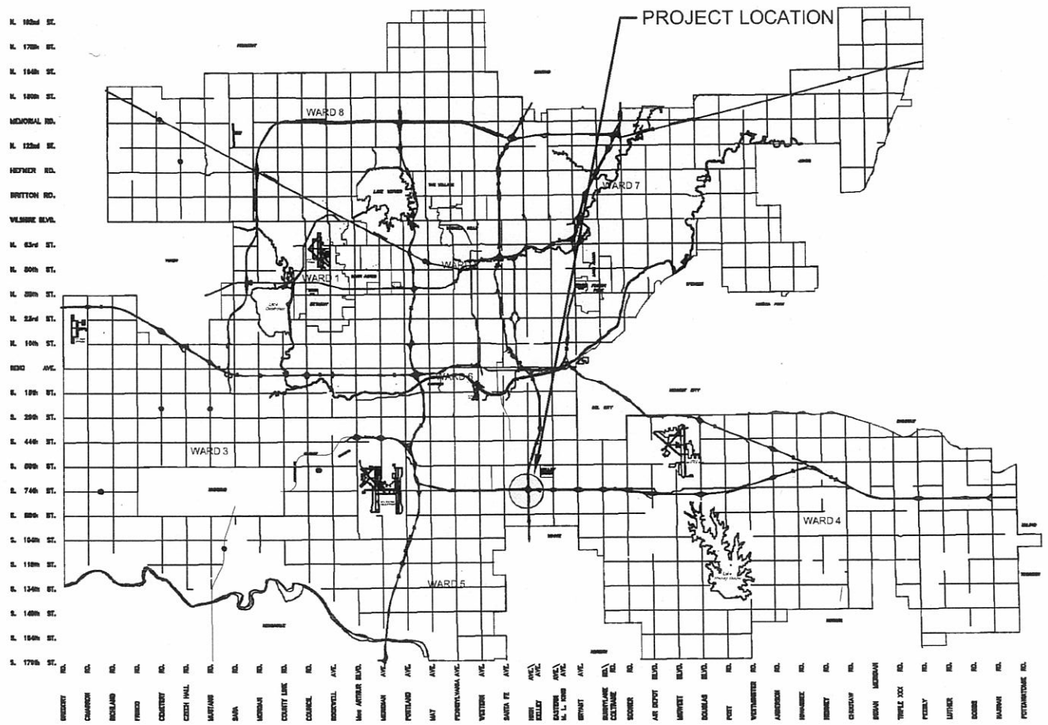

WATER PROJECT WC-0816
WATER RELOCATION FOR I-35 & I-240 INTERCHANGE IMPROVEMENTS

IN THE VICINITY OF

S.E. 74th STREET
BETWEEN
S. SHIELDS BLVD. & S. I-35 SERVICE RD.
AND
S. I-35 SERVICE RD.
BETWEEN
S.E. 82nd STREET & S.E. 79th STREET

The City of
OKLAHOMA CITY

MICK CORNETT, Mayor

COUNCIL MEMBERS:

JAMES GREINER	Ward	1
ED SHADID	Ward	2
LARRY McATEE	Ward	3
PETE WHITE	Ward	4
DAVID GREENWELL	Ward	5
MARGARET S. "MEG" SALYER	Ward	6
JOHN A. PETTIS JR.	Ward	7
PATRICK J. RYAN	Ward	8
JAMES D. COUCH,	City Manager	
ERIC J. WENGER, P.E.,	City Engineer	

Oklahoma City Water Utilities Trust

OKLAHOMA CITY WATER UTILITIES TRUST

PETE WHITE, Chairman, Council Trustee
CARL EDWARDS, Vice-Chairman, Independent Trustee
CODY GRAVES, Independent Trustee
MICK CORNETT, Mayor Trustee
DAVID GREENWELL, Surrogate Trustee
JAMES D. COUCH, City Manager Trustee
DENNIS CLOWERS, Surrogate Trustee
MARSHA W. SLAUGHTER, P.E., General Manager
FRANCES KERSEY, Secretary

SHEET INDEX

SHEET NO.	DESCRIPTION
1	TITLE SHEET & ESTIMATED QUANTITIES
2	LOCATION MAP & VICINITY MAP
3	GENERAL NOTES
4-7	PLAN AND PROFILE SHEETS
8-13	WATER STANDARDS

ONE CALL UTILITY LOCATION NUMBER

840-5032
1-800-522-6543

This number is to be used for information on the location of all underground utilities. Contact this number and other numbers specified in the plans prior to any excavation.

UTILITIES DEPARTMENT
CAPITAL IMPROVEMENT DESIGN

PREPARED BY

RICHARD M. GROTTE, P.E.
DESIGN ENGINEER
POE & ASSOCIATES, INC.
1601 N.W. EXPRESSWAY STE. 400
OKLA. CITY, OKLAHOMA 73118
OFFICE (405) 949-1962 & (405)608-0380
COA NO. 541

9/9/16
DATE

REGISTERED PROFESSIONAL ENGINEER
RICHARD M. GROTTE
12168
OKLAHOMA

RECOMMENDED FOR APPROVAL

MARSHA W. SLAUGHTER, P.E.
UTILITIES DIRECTOR — DATE

ERIC J. WENGER, P.E.
CITY ENGINEER — DATE

APPROVED BY THE TRUSTEES AND SIGNED BY THE CHAIRMAN OF THE OKLAHOMA CITY WATER UTILITIES TRUST

CHAIRMAN — DATE

SECRETARY — DATE

PROJECT NO. 09032(17) SHT. WL01

PLOTTED: SEPT 07, 2016 - 11:42:27
FILE NAME: G:\PROJECTS\203033 OKC WC-0816 & SC-0911 & SC-0959 & SC-0976\Utilities\Water\CADDrawings\WATERLINE_TITLE SHEET.DWG

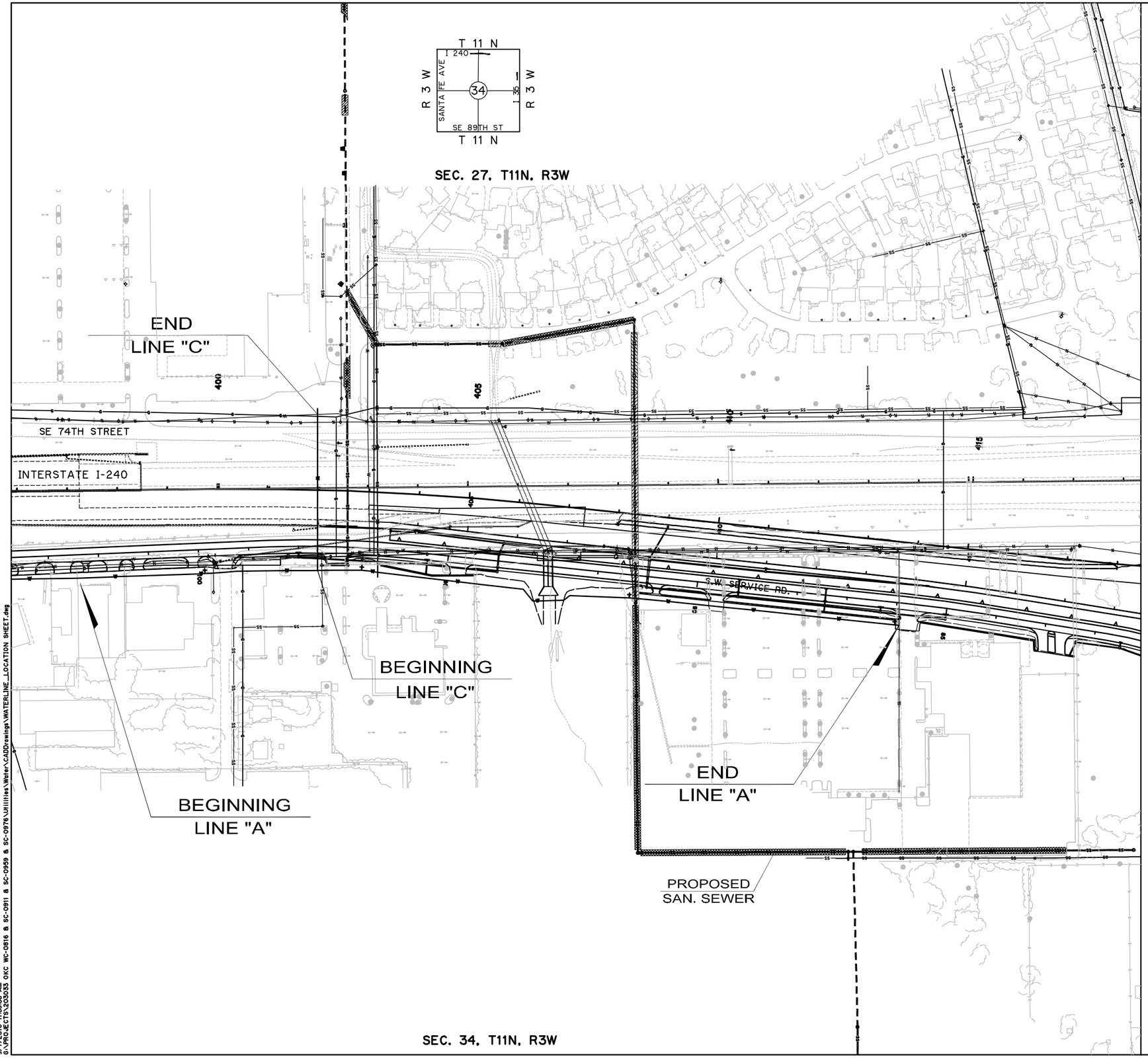

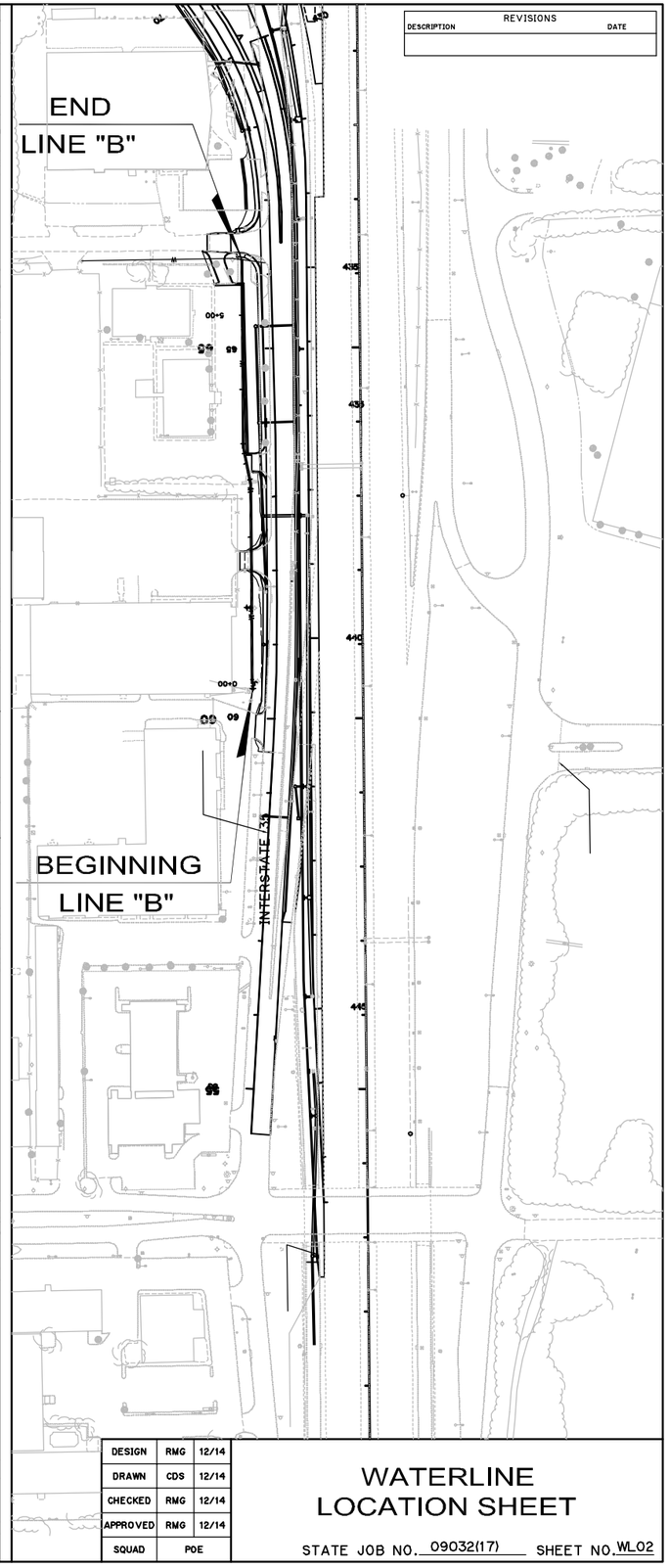

REVISIONS	
DESCRIPTION	DATE

DESIGN	RMG	12/14
DRAWN	CDS	12/14
CHECKED	RMG	12/14
APPROVED	RMG	12/14
SQUAD	POE	

WATERLINE LOCATION SHEET

STATE JOB NO. 09032(17) SHEET NO. WL02

9/7/2016 11:35:38 AM
G:\PROJECTS\203053 OKC WC-0816 & SC-0911 & SC-0959 & SC-0976\Utilities\Water\CADDrawings\WATERLINE_LOCATION SHEET.dwg

REVISIONS	
DESCRIPTION	DATE

GENERAL NOTES:

1.) ALL CONSTRUCTION SHALL CONFORM TO OKLAHOMA CITY STANDARD SPECIFICATIONS.

2.) COMPACTION OF TRENCH BACKFILL IN PAVED AREAS SHALL BE A MINIMUM OF 95% OF STANDARD PROCTOR DENSITY.

3.) THE CONTRACTOR SHALL BE RESPONSIBLE FOR THE PLACEMENT OR REPAIR OF TRAFFIC CONTROL DEVICES DAMAGED DURING CONSTRUCTION.

4.) THE CONTRACTOR SHALL CONTACT OKLAHOMA CITY TRAFFIC OPERATIONS AT 297-2648 SEVENTY-TWO (72) HOURS PRIOR TO THE START OF CONSTRUCTION FOR TRAFFIC SIGNAL CONDUIT LOCATION.

5.) THE CONTRACTOR SHALL FIELD VERIFY ALL EXISTING UTILITIES PRIOR TO CONSTRUCTION. THE CONTRACTOR SHALL BE RESPONSIBLE FOR THE REPLACEMENT OR REPAIR OF ALL PRIVATE AND PUBLIC UTILITIES DAMAGED DURING CONSTRUCTION.

6.) ALL CROSSINGS AND PROPOSED TIE-IN LOCATIONS SHALL BE EXCAVATED AHEAD OF CONSTRUCTION TO VERIFY THE FLOWLINE OF EXISTING WATER MAINS.

7.) THE CONTRACTOR SHALL BE RESPONSIBLE FOR THE CONSTRUCTION STAKING. THE STAKING MUST BE DONE BY A REGISTERED PROFESSIONAL LAND SURVEYOR WHICH WILL BE VERIFIED AT PRE-WORK CONFERENCE.

8.) VALVES, HYDRANTS, DUCTILE IRON PIPE AND FITTINGS:

THE AIR RELEASE AND VACUUM VALVE SHALL BE MANUFACTURED BY APCO VALVE & PRIMER CORPORATION, VAL-MATIC VALVE AND MANUFACTURING CORPORATION OR APPROVED EQUAL.

GATE VALVES, BUTTERFLY VALVES, TAPPING VALVES SHALL BE MECHANICAL JOINT AND MANUFACTURED BY AMERICAN CAST IRON PIPE COMPANY, MUELLER CO., U.S. PIPE, PRATT OR APPROVED EQUAL. TAPPING SLEEVE SHALL BE DUCTILE IRON OR STEEL, MECHANICAL JOINT AND SHALL BE MANUFACTURED BY U.S. PIPE, AMERICAN CAST IRON PIPE COMPANY, JCM MODEL 414 OR SMITH BLAIR MODEL 623 AND MODEL 3490 MJ BY POWER SEAL PIPELINE PRODUCTS CORPORATION. ALL STEEL TAPPING SLEEVES MUST HAVE FUSION-BONDED EPOXY COATING AND TYPE 304 STAINLESS STEEL BOLTS AND NUTS.

HYDRANTS SHALL CONFORM TO AWWA STANDARD C502, LATEST REVISION. HYDRANTS SHALL BE AMERICAN DARLING (MODEL 5 1/4 B-84-B), MUELLER CENTURION 200 MODEL A-423, M&H RELIANT MODEL 929 OR U.S. METROPOLITAN.

DUCTILE IRON PIPE AND FITTINGS SHALL BE MANUFACTURED BY U.S. PIPE AND FOUNDRY CO., GRIFFIN PIPE PRODUCTS CO., AMERICAN CAST IRON PIPE CO. AND McWANE CAST IRON PIPE COMPANY. DUCTILE IRON FITTINGS MANUFACTURED BY TYLER PIPE AND STAR PIPE PRODUCTS SHALL BE ACCEPTED.

MEGALUG SHALL BE MANUFACTURED BY EBAA IRON SALES, INC. OR APPROVED EQUAL.

9.) ANY WATER MAIN TEMPORARILY TAKEN OUT OF SERVICE FOR MAKING CONNECTIONS AND INSTALLING PLUGS SHALL BE MADE AT LOW DEMAND TIMES. THE CONTRACTOR SHALL PROVIDE SEVEN DAYS NOTICE FOLLOWED BY THREE DAYS NOTICE TO THE CITY AND THE PROPERTY OWNERS PRIOR TO TAKING ANY WATER MAIN OUT OF SERVICE.

10.) THE CONTRACTOR SHALL BE RESPONSIBLE FOR THE REPAIR OR REPLACEMENT OF ALL EROSION CONTROL DEVICES DAMAGED DUE TO CONSTRUCTION.

11.) A COPY OF THE EROSION CONTROL PLAN MUST BE ON SITE AT ALL TIMES AND MADE AVAILABLE TO THE INSPECTOR UPON REQUEST.

12.) A WORK ZONE PERMIT MUST BE OBTAINED FROM THE TRAFFIC MANAGEMENT DIVISION AT LEAST TWO (2) WORKING DAYS PRIOR TO THE START OF WORK AND/OR PLACING OR REMOVING ANY BARRICADES OR MODIFYING EXISTING TRAFFIC CONTROL DEVICES. CALL (405) 297-2531 TO OBTAIN AN APPLICATION.

13.) CONSTRUCTION ACTIVITIES THAT RESULT IN LAND DISTURBANCE OF EQUAL TO OR GREATER THAN ONE (1) ACRE MUST OBTAIN A PERMIT FROM ODEQ (FORM 605-002a) FOR STORM DISCHARGES FROM CONSTRUCTION ACTIVITIES AND A PERMIT FROM THE CITY OF OKLAHOMA CITY, STORM WATER QUALITY.

DESIGN	RMG	12/14
DRAWN	CDS	12/14
CHECKED	RMG	12/14
APPROVED	RMG	12/14
SQUAD	POE	

WATERLINE GENERAL NOTES

STATE JOB NO. 09032(17) SHEET NO. WL03

9/7/2016 11:40:37 AM
G:\PROJECTS\203033 OKC WC-0816 & SC-0911 & SC-0959 & SC-0976\Utilities\Water\CADDrawings\WATERLINE_GENERAL NOTES.dwg

REVISIONS	
DESCRIPTION	DATE

PLAN
NOTE BOOK
NO.
SURVEYED
PLOTTED
ALIGNMENT CHECKED
RT. OF WAY CHECKED
BY
DATE

PROFILE
NOTE BOOK
NO.
SURVEYED
PLOTTED
ALIGNMENT CHECKED
RT. OF WAY CHECKED
BY
DATE

℄ I-240
℄ I-240
PROP. WATER LINE "C"
PROP. SAN. SEWER
℄ PRESENT I-240
RETAINING WALL 'D'
RETAINING WALL 'D'
ABANDON EX. 12" W.L.
℄ S.W. SERVICE RD.
REMOVE FIRE HYD.
ABANDON EX. 12" W.L.
REMOVE FIRE HYD.
ABANDON EX. 12" W.L.
PROP. SAN. SEWER
REMOVE FIRE HYD.
R/W
PRES. R/W
R/W
PRES. R/W
20' PUE
8.00'
20' PUE
REMOVE & REPLACE PARKING LOT CONC. PAVEMENT
PAVEMENT CUT & PERMANENT CONC. REPAIR
REMOVE & REPLACE PARKING LOT CONC. PAVEMENT
20' PUE
8.00'
REMOVE & REPLACE PARKING LOT CONC. PAVEMENT
DO NOT DISTURB EX. SIGN
S. STILES AVE.
SHIELDS BLVD.
Horizontal Scale in Feet
50' 0 50' 100'

STA. 104+74.00, 42.10' LT. (B)
S.W. SERVICE RD.
INSTALL
1-FIRE HYDRANT ASSEMBLY
3-12" FIRE HYD. RISERS
1-12"x12"x6" TEE
1-6" GATE VALVE & BOX
FL=1274.21

STA. 99+89.00, 47.44' LT. (C)
S.W. SERVICE RD.
INSTALL
1-FIRE HYDRANT ASSEMBLY
4-12" FIRE HYD. RISERS
1-12"x12"x6" TEE
1-6" GATE VALVE & BOX
4-GUARD POST (W-16)

STA. 97+61.55, 48.00' LT. (D)
S.W. SERVICE RD.
INSTALL
1-12"x12"x12" TEE

STA. 96+71.68, 44.86' LT. (E)
S.W. SERVICE RD.
INSTALL
1-FIRE HYDRANT ASSEMBLY
1-12" RISER
1-12"x12"x6" TEE
1-6" GATE VALVE & BOX
4-GUARD POST (W-16)

(F) STA. 93+44.42, 51.33' LT.
S.W. SERVICE RD.
INSTALL
1-12"x45° BEND

(G) STA. 93+23.80, 72.61' LT.
S.W. SERVICE RD.
INSTALL
1-12"x45° BEND

(H) STA. 92+61.89, 64.74' LT.
S.W. SERVICE RD.
INSTALL
1-12"x45° BEND

(I) STA. 92+50.99, 54.18' LT
S.W. SERVICE RD.
INSTALL
1-12"x45° BEND

(J) STA. 92+20.00, 52.00' LT.
S.W. SERVICE RD.
INSTALL
1-12"x45° VERT. BEND

(K) STA. 92+00.00, 50.50' LT.
S.W. SERVICE RD.
INSTALL
1-12"x45° VERT. BEND

(L) STA. 91+32.34, 46.20' LT
S.W. SERVICE RD.
INSTALL
1-FIRE HYDRANT ASSEMBLY
2-12" FIRE HYD. RISERS
1-12"x12"x6" TEE
1-6" GATE VALVE & BOX

(M) STA. 97+66.55, 48.00' LT.
S.W. SERVICE RD.
INSTALL
1-12" GATE VALVE

(N) STA. 91+27.34, 46.20' LT.
S.W. SERVICE RD.
INSTALL
1-12" GATE VALVE

STA. 104+80.61 42.30' LT. (A)
S.W. SERVICE RD.
CONNECT TO EXIST. W.L. w/
1-12"x12" TAPPING SLEEVE
1-12" TAPPING VALVE & BOX
1-12" PLUG
1-12x11 1/4" BEND
1-12" CAP
1-12" TAP
FL=1274.42

BM#10 - "X" ON CURB @ P.I. S. COR. PARKING LOT OF VALERO GAS STA. 176.68' LT. ℄ I-240 I-240 STA. 394+01.73 EL=1275.43

BM#20 -"X" ON CONC. BASE OF LIGHT POLE N. OF ENTERPRISE RENTAL. 155.12' RT. ℄ I-240 I-240 STA. 395+58.73 EL=1280.90

EXIST. GROUND
18" MIN.
24" MIN. GAS
EX. WATER
CRUSHED ROCK BACKFILL (INCIDENTAL)
1,380 L.F. OF 12" W.L.
EX. 8" SAN. SEWER
4' MIN. COVER
PROP. DITCH PROFILE
EX. 18"ø RCP
24" MIN.
45 L.F. BORE & STEEL ENCASING FOR 12" W.L. ELEV.=1258.82
MATCHLINE
12" WATERLINE LINE "A"

FL=1273.14 FL=1273.11 FL=1273.08 FL=1273.05 FL=1273.02 FL=1272.89 FL=1271.63 FL=1269.36 FL=1269.36 FL=1269.18 FL=1264.56 FL=1259.32 FL=1265.50 FL=1266.70 FL=1266.75
FL=1273.02 FL=1270.52 FL=1270.38 FL=1269.36

105+00 104 103 102 101 100+00 99 98 97 96 95+00 94 93 92 91

State Job No. 09032(17) Sheet No. WL04

SEPT 09, 2016 - 10:19:27
G:\PROJECTS\203033 OKC WC-0816 & SC-0911 & SC-0959 & SC-0976\Utilities\Water\CADDrawings\WATERLINE_PNP04B.DWG

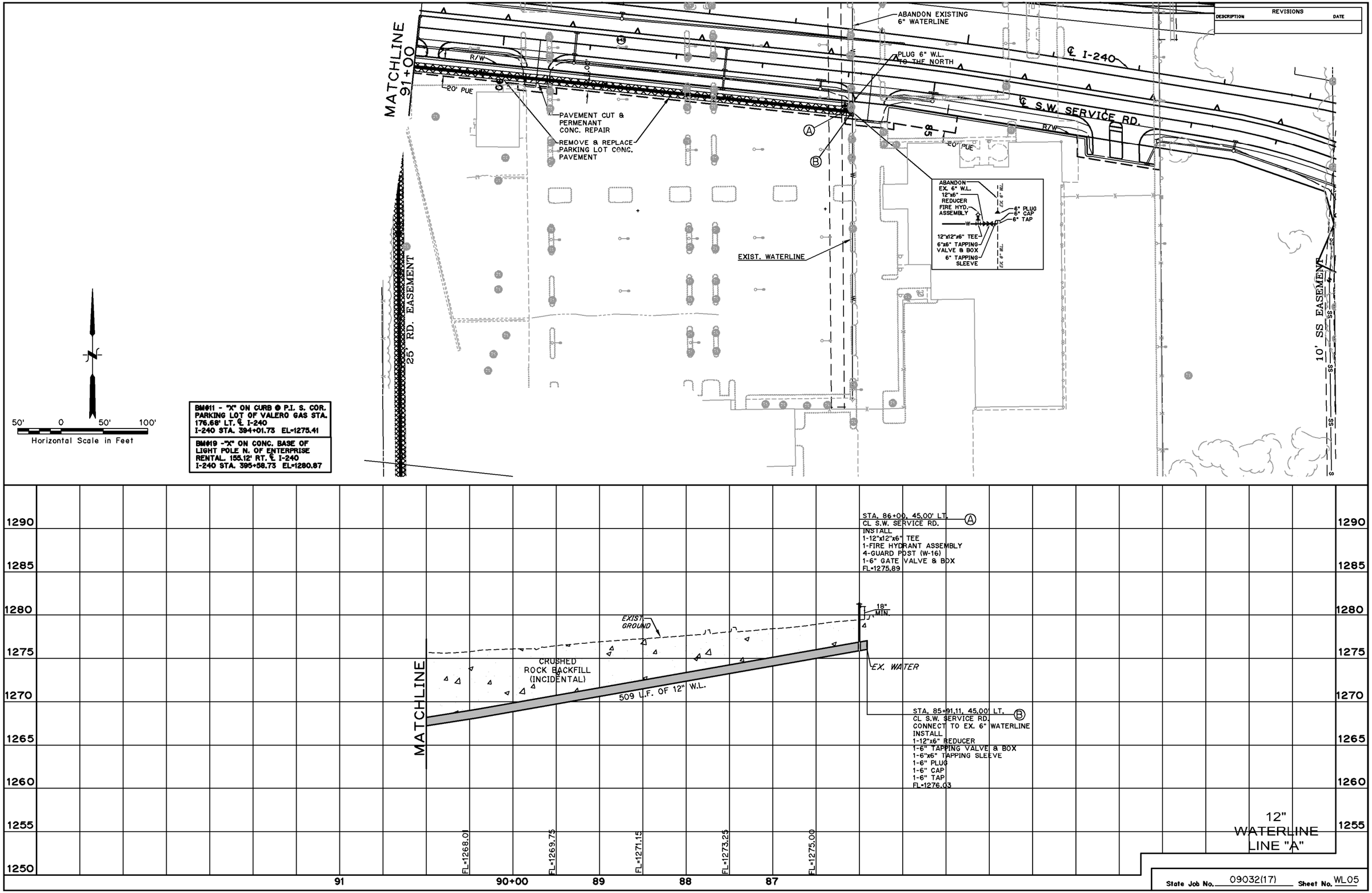

State Job No. 09032(17) Sheet No. WL05

SEPT 07, 2016 - 13:10:28
G:\PROJECTS\203033 OKC WC-0816 & SC-0911 & SC-0959 & SC-0976\Utilities\Water\CADDrawings\WATERLINE_PNP04C.DWG

EXISTING & PROPOSED LIMITS OF ACCESS TO SERVICE ROAD ONLY

SEC. 34, T11N, R3W

S.E. 82ND ST.

GARDEN ACRES

S.E. 79TH

REVISIONS
DESCRIPTION | DATE

EXISTING & PROPOSED LIMITS OF ACCESS TO SERVICE ROAD ONLY

PUE
FIRE HYDRANT
12"x 90° BEND
12" WATERLINE
6" GATE VALVE
12"x6" TEE
12" TAPPING SLEEVE
12" TAPPING VALVE & BOX
EX. 12" GATE VALVE
12" PLUG
12" CAP

PRES. R/W

E-W 1/4 SEC. LINE
N 89°26'40.0" E

N 03°16'40.93"E

℄ S.W. SERVICE RD.

25'

12.00'

PUE

CV. SW-1

REMOVE FIRE HYDRANT

ABANDON EX. 12" WATERLINE

4' TEMPORARY CONST. EASEMENT

TEMPORARY CONST. EASEMENT

27 S.Y. DRIVEWAY REPAIR

27 S.Y. DRIVEWAY REPAIR

REMOVE & REPLACE PARKING LOT CONC. PAVEMENT

20' PUE

R/W

N 0°30'05.4"W

N 01°38'50.2"W

N 0°30'05.4"W

CV. SW-2

℄ RAMP 'M'

FOL

0+00

5+00

68+00

55 60 65

445 440 435

℄ I-35

BEGIN 12" W.L.
STA. 60+46.22. 27.56' LT.
INSTALL
1 - CONNECTION TO
EXISTING 12" WATERLINE

END 12" W.L.
STA. 66+20.70. 38.70' LT.
INSTALL
1 - CONNECTION TO
EXISTING 10" WATERLINE

EX. F.H. TO REMAIN
10" TAPPING VALVE
12" WATERLINE
12"x10" REDUCER
EXIST. 10" GATE VALVE
10"x10" TAPPING SLEEVE
10" CAP
10" PLUG
EX. VALVE

50' 0 50' 100'
Horizontal Scale in Feet

N 0°30'21.5" W
N-S SEC. LINE

SEC. 35, T11N, R3W

PLAN
NOTE BOOK
NO.
SURVEYED
PLOTTED
ALIGNMENT CHECKED
PT. OF WAY CHECKED
BY
DATE

BM#28 -"X" ON EAST CURB OF PARKING LOT. 136.00' LT. ℄ I-35
I-35 STA. 65+16.94 EL=1290.76

BM#30 -"X" ON EAST CURB OF PARKING LOT. 136.00' LT. ℄ I-35
I-35 STA. 65+16.94 EL=1298.29

Ⓐ STA. 60+46.22. 27.56 LT.
1 - 12" TAPPING VALVE & BOX
1 - 12"X12" TAPPING SLEEVE
1 - 12" PLUG
1 - 12" CAP
1 - 12" TAP
FL=1287.62

Ⓑ STA. 60+46.14. 29.61' LT.
1 - FIRE HYDRANT
3 - 12" RISERS
1 - 12"X12"X6" M.J. TEE
1 - 6" GATE VALVE & VALVE BOX
FL=1287.56

Ⓒ STA. 60+46.06. 31.65' LT.
1 - 12" 90° M.J. BEND
FL=1287.52

Ⓓ STA. 61+47.87. 33.82' LT.
1 - FIRE HYDRANT
3 - 12" RISERS
1 - 12"X12"X6" M.J. TEE
1 - 6" GATE VALVE & VLAVE BOX
FL=1286.39

Ⓔ STA. 63+18.38. 33.90' RT.
1 - 12"X11.25° M.J. BEND
FL=1286.39

Ⓕ STA. 63+59.99. 43.36' RT.
1 - 12"X11.25° M.J. BEND
FL=1285.86

Ⓖ STA. 66+20.70. 38.70' RT.
1 - 12"X10" M.J. REDUCER
1 - 10" TAPPING VALVE & BOX
1 - 10"X10" TAPPING SLEEVE
1 - 10" PLUG
1 - 10" CAP
1 - 10" TAP
FL=1284.00

PROFILE
NOTE BOOK
NO.
SURVEYED
PLOTTED
ALIGNMENT CHECKED
PT. OF WAY CHECKED
BY
DATE

BEGIN 12" W.L.
STA. 60+46.22. 27.56' RT.
INSTALL
1 - CONNECTION TO
EXISTING 12" WATERLINE

END 12" W.L.
STA. 66+20.70
INSTALL
1 - CONNECTION TO
EXISTING 10" WATERLINE

24" MIN.
EXIST. GROUND
TUG PUG PUG PUG GAS TUG
12" WATER
4" MIN. COVER
CRUSHED ROCK BACKFILL (INCIDENTAL)
570.30 L.F. 12" WATERLINE

FL=1287.62 FL=1286.99 FL=1286.39 FL=1286.39 FL=1285.99 FL=1285.11 FL=1284.24

1310 1305 1300 1295 1290 1285 1280 1275 1270 1265

53 54 55+00 56 57 58 59 60+00 61 62 63 64 65+00 66 67 68

12" WATERLINE LINE "B"

State Job No. 09032(17) Sheet No. WL06

SEPT 09, 2016 - 09:43:43
G:\PROJECTS\203033 OKC WC-0816 & SC-0911 & SC-0959 & SC-0976\Utilities\Water\CADDrawings\WATERLINE_PNP01.DWG

REVISIONS	
DESCRIPTION	DATE

50' 0 50' 100'
Horizontal Scale in Feet

CLOVER LEAF MANOR ADD

LM REAL ESTATE CO LLC

E 50' TRACT 53
WEST HALF 54

℄ PRESENT I-240

℄ I-240

S. BYERS AV.

EX. SSMH
TR=1265.91
FL=1260.34

EX. SSMH
TR=1268.83
EX. FL. S.=1261.83
EX. FL. E.=1261.43
EX. FL. NW.=1261.50

EX. SSMH
TR=1267.01
FL=1261.91

EX. SSMH
TR=1270.36
FL=1262.06

EX. SSMH
TR=1278.53
FL=1269.13

ABANDON 12" WATERLINE

PROP. WATER LINE "A"

PROP. WATER LINE "A"

R/W

PUE

PRESENT R/W

℄ NW SERVICE RD.

25' ESMT.

8'

INSERT
N.T.S

BM#21 -"X" ON CURB @ P.I. OF W.
ENTRANCE TO CAR DEALERSHIP.
157.12' RT. ℄ 240
I-240 STA. 402+17.71 EL=1276.79

PLAN
SURVEYED
PLOTTED
NOTE BOOK
NO.
ALIGNMENT CHECKED
RT. OF WAY CHECKED
BY
DATE

PROFILE
SURVEYED
PLOTTED
NOTE BOOK
NO.
ALIGNMENT CHECKED
RT. OF WAY CHECKED
BY
DATE

1290
1285
1280
1275
1270
1265
1260
1255
1250
1245
1240

4+00 3+00 2+00 1+00 0+00

VENT PIPE
PROP. GROUND
EXIST. GROUND
VENT PIPE
℄ I-240
PROP.
MSE WALL
EX. 24" RCP
18" RCP
GAS
WATER
PR. 12" W.L.
GAS
WATER
18" RCP
FL=1262.80
324 L.F. OF 12" W.L.
274 L.F. BORE & STEEL
ENCASING FOR 12" W.L.
WITH VENT PIPES
ELEV.=1255.43

Ⓐ STA. 0+00.00~12" W.L.=
STA. 402+00.64, 160.99' RT
INSTALL
1-12" GATE VALVE
1-12"x45° BEND
FL=1270.45

Ⓑ STA. 0+20.23~12" W.L.=
STA. 402+00.10, 140.77'RT.
INSTALL
1-12"x45° BEND
FL=1256.93

Ⓒ STA. 3+17.83~12" W.L.=
STA. 401+92.53, 156.74'LT.
INSTALL
1-12"x45° BEND
FL=1256.93

Ⓓ STA. 3+23.68~12" W.L.=
STA. 401+92.39, 162.59'LT.
INSTALL
1-12"x45° BEND
1-12"x90° BEND
FL=1263.67

Ⓔ STA. 3+11.63~12" W.L.=
STA. 401+92.68, 150.54'LT.
CONNECT TO EX. 12" W.L.
INSTALL
1-12" TAP
1-12"x12" TAPPING SLEEVE
1-12" TAPPING VALVE & BOX
FL=1263.77

12"
WATERLINE
LINE "C"

State Job No. 09032(17) Sheet No. WL07

SEPT 09, 2016 - 09:54:30
G:\PROJECTS\203033 OKC WC-0816 & SC-0911 & SC-0959 & SC-0976\Utilities\Water\CADDrawings\WATERLINE_PNP05.DWG

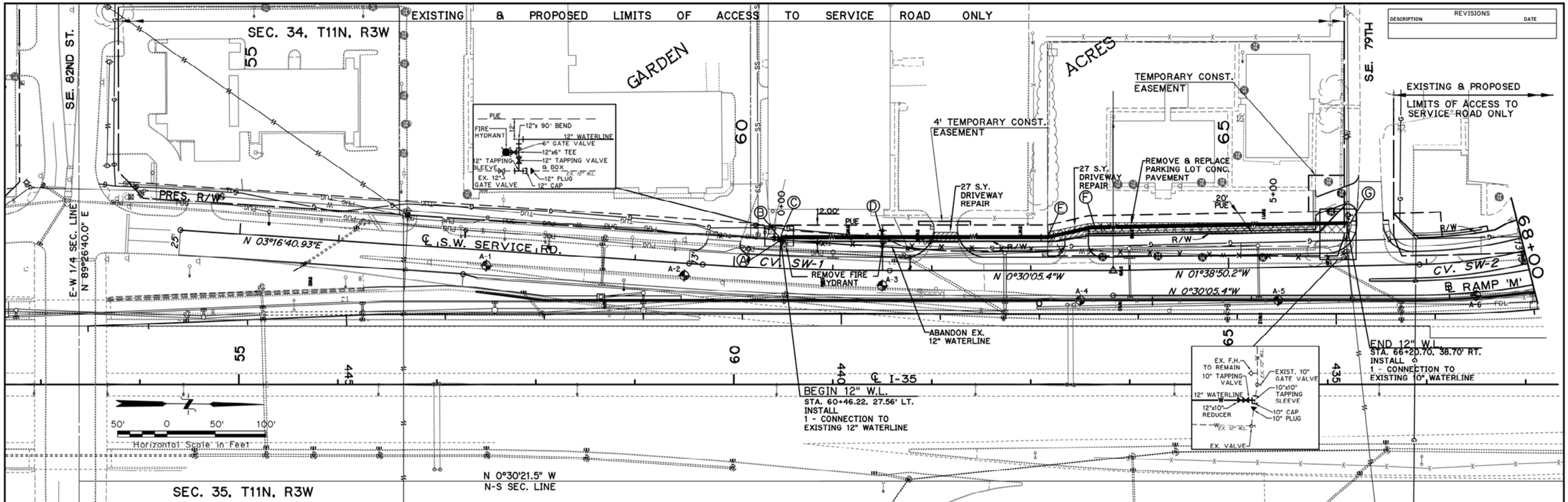

State Job No. 09032(17) Sheet No. WL06

PLAN — NOTE BOOK NO. — SURVEYED — PLOTTED — ALIGNMENT CHECKED — RT. OF WAY CHECKED — BY — DATE

PROFILE — NOTE BOOK NO. — SURVEYED — PLOTTED — ALIGNMENT CHECKED — RT. OF WAY CHECKED — BY — DATE

SEPT 08, 2016 - 16:58:25
G:\PROJECTS\203033 OKC WC-0816 & SC-0911 & SC-0959 & SC-0976\Utilities\Water\CADDrawings\WATERLINE_PNP01.DWG

PLOTTED: Tuesday, August 26, 2014 10:17:15 AM
FILE PATH: Z:\STANDARD DETAILS & WATER METER SPECIFICATIONS\UPDATED STANDARD DETAILS 2014\WATER\FINAL SHEETS\WAT-STD-DET-2014-SIGNED.DWG

WATER STANDARD DETAIL

WATER MANHOLE COVER

W-12

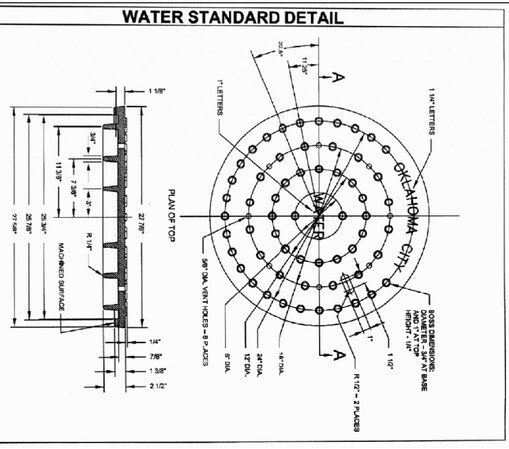

WATER STANDARD DETAIL

FIRE HYDRANT INSTALLATION ON EXISTING MAIN

W-08 2 OF 2

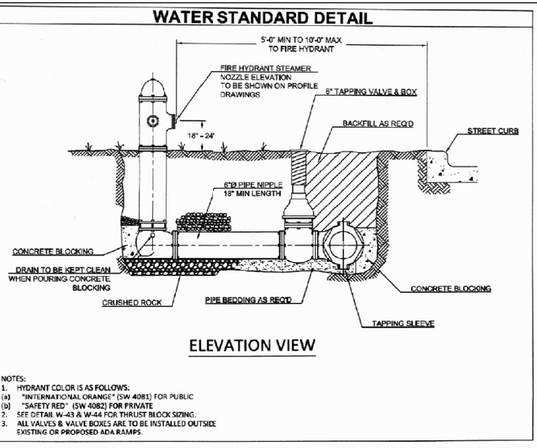

ELEVATION VIEW

NOTES:
1. HYDRANT COLOR IS AS FOLLOWS:
(a) "INTERNATIONAL ORANGE" (SW 4081) FOR PUBLIC
(b) "SAFETY RED" (SW 4082) FOR PRIVATE
2. SEE DITAIL W-43 & W-44 FOR THRUST BLOCK SIZING.
3. ALL VALVES & VALVE BOXES ARE TO BE INSTALLED OUTSIDE EXISTING OR PROPOSED ADA RAMPS.

WATER STANDARD DETAIL

PVC PIPE TRACER WIRE INSTALLATION

W-13

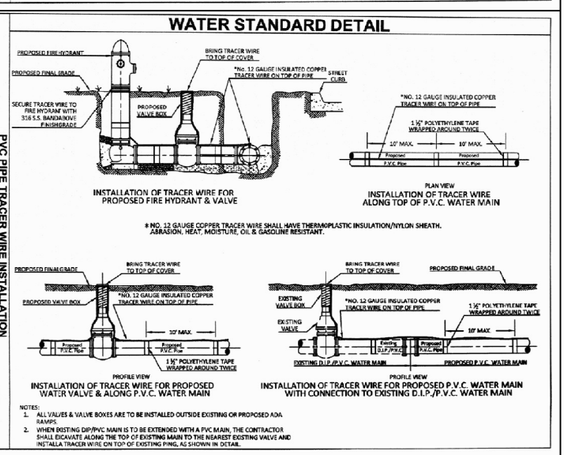

NOTES:
1. ALL VALVES & VALVE BOXES ARE TO BE INSTALLED OUTSIDE EXISTING OR PROPOSED ADA RAMPS.
2. WHEN EXISTING DIP/PVC MAIN IS TO BE EXTENDED WITH A PVC MAIN, THE CONTRACTOR SHALL EXCAVATE ALONG THE TOP OF EXISTING MAIN TO THE NEAREST EXISTING VALVE AND INSTALLA TRACER WIRE ON TOP OF EXISTING PING, AS SHOWN IN DETAIL.

WATER STANDARD DETAIL

FIRE HYDRANT NOZZLES THREAD DETAILS

W-09

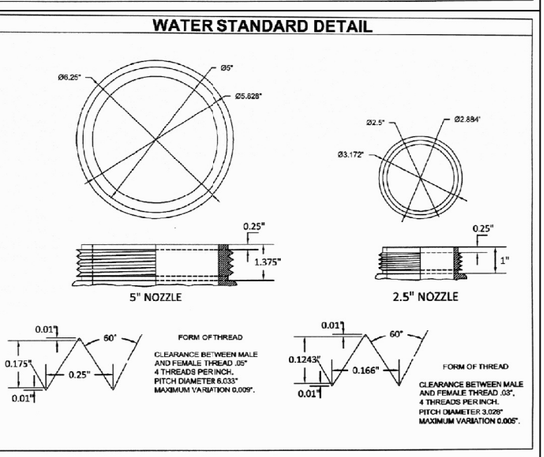

WATER STANDARD DETAIL

2" AIR / VACUUM RELEASE VALVE INSTALLATION

W-14

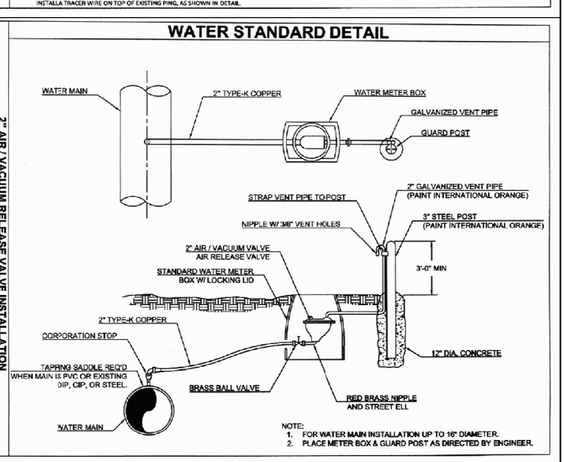

NOTE:
1. FOR WATER MAIN INSTALLATION UP TO 16" DIAMETER.
2. PLACE METER BOX & GUARD POST AS DIRECTED BY ENGINEER.

WATER STANDARD DETAIL

CAST IRON VALVE BOX, LID & EXTENSION

W-10 1 OF 2

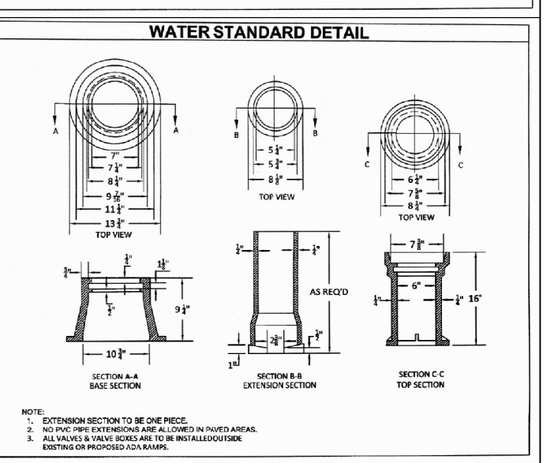

NOTE:
1. EXTENSION SECTION TO BE ONE PIECE.
2. NO PVC PIPE EXTENSIONS ARE ALLOWED IN PAVED AREAS.
3. ALL VALVES & VALVE BOXES ARE TO BE INSTALLEDOUTSIDE EXISTING OR PROPOSED ADA RAMPS.

WATER STANDARD DETAIL

2" BLOW OFF INSTALLATION

W-15

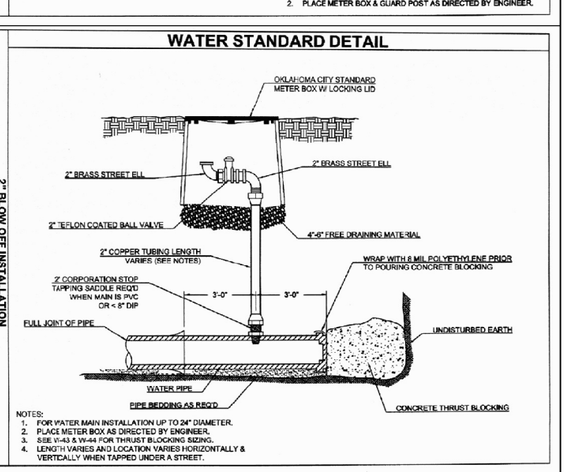

NOTES:
1. FOR WATER MAIN INSTALLATION UP TO 24" DIAMETER.
2. PLACE METER BOX AS DIRECTED BY ENGINEER.
3. SEE V-43 & W-44 FOR THRUST BLOCKING SIZING.
4. LENGTH VARIES AND LOCATION VARIES HORIZONTALLY & VERTICALLY WHEN TAPPED UNDER A STREET.

WATER STANDARD DETAIL

CAST IRON VALVE BOX, LID & EXTENSION

W-11 2 OF 2

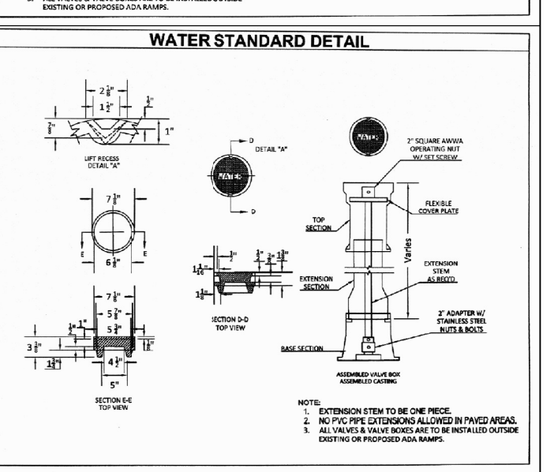

NOTE:
1. EXTENSION STEM TO BE ONE PIECE.
2. NO PVC PIPE EXTENSIONS ALLOWED IN PAVED AREAS.
3. ALL VALVES & VALVE BOXES ARE TO BE INSTALLED OUTSIDE EXISTING OR PROPOSED ADA RAMPS.

SHEET NUMBER W-STD-02

SCALE: AS SHOWN

DATE	08/07/14
DRAWN BY:	JDS
CHECKED BY:	WINSLOW

WATER STANDARD DETAILS

NO.	DATE	DESCRIPTION

The City of Oklahoma City
Utilities Department
Engineering Division

REVISIONS

DESCRIPTION	DATE

STATE JOB NO. 09032117 SHEET NO. WL09

PLOTTED: Tuesday, August 26, 2014 10:19:03 AM
FILE PATH: Z:\STANDARD DETAILS & WATER METER SPECIFICATIONS\UPDATED STANDARD DETAILS 2014\WATER\FINAL SHEETS\WAT-STD-DET-2014-SIGNED.DWG

WATER STANDARD DETAIL

SINGLE SHORT SERVICE REPLACEMENT — W-20

NOTE:
1. SERVICE SADDLES REQUIRED ON ALL TAPS UNLESS OTHERWISE SPECIFIED.
2. SERVICE SADDLES TO BE DOUBLE BAND BRASS SADDLES. (FORD METER BOX CO 202BS. OR APPROVED EQUAL).

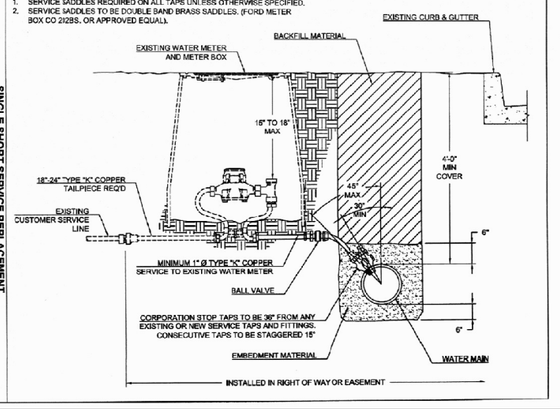

WATER STANDARD DETAIL

GUARD POST INSTALLATION DETAIL — W-16

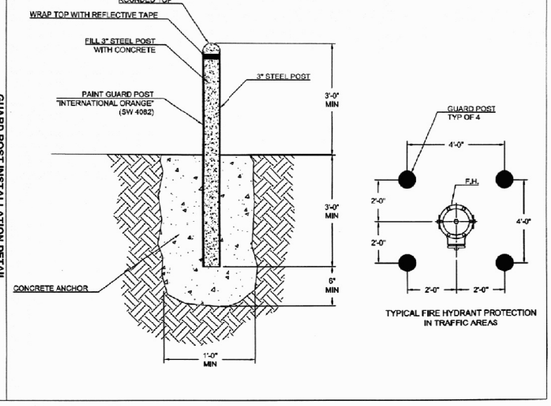

WATER STANDARD DETAIL

SINGLE LONG SERVICE REPLACEMENT — W-21

NOTE:
1. SERVICE SADDLES REQUIRED ON ALL TAPS UNLESS OTHERWISE SPECIFIED.
2. SERVICE SADDLES TO BE DOUBLE BAND BRASS SADDLES. (FORD METER BOX CO 202BS. OR APPROVED EQUAL).

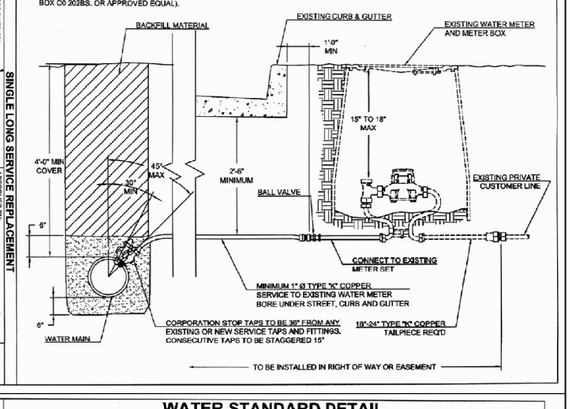

WATER STANDARD DETAIL

REVERSE TAP INSTALLATION — W-17

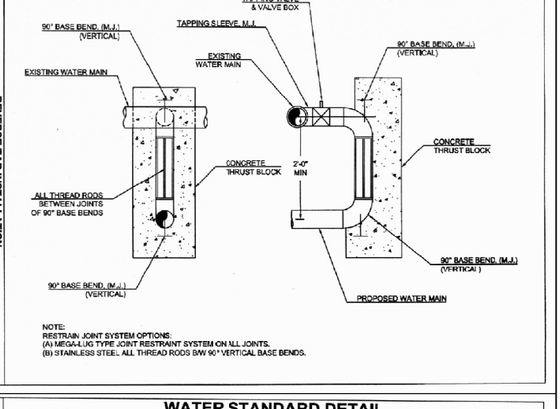

NOTE:
RESTRAIN JOINT SYSTEM OPTIONS.
(A) MEGA-LUG TYPE JOINT RESTRAINT SYSTEM ON ALL JOINTS.
(B) STAINLESS STEEL ALL THREAD RODS B/W 90° VERTICAL BASE BENDS.

WATER STANDARD DETAIL

SINGLE SHORT SERVICE NEW INSTALLATION — W-22

NOTE:
1. SERVICE SADDLES REQUIRED ON ALL TAPS UNLESS OTHERWISE SPECIFIED.
2. SERVICE SADDLES TO BE DOUBLE BAND BRASS SADDLES. (FORD METER BOX CO 202BS. OR APPROVED EQUAL).

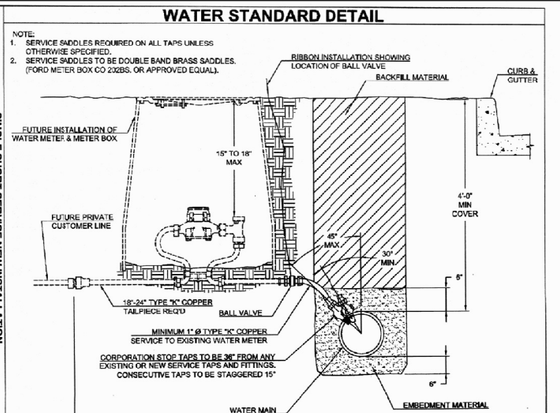

WATER STANDARD DETAIL

PIPE BORING AND CASING INSTALLATION — W-18 — 1 OF 2

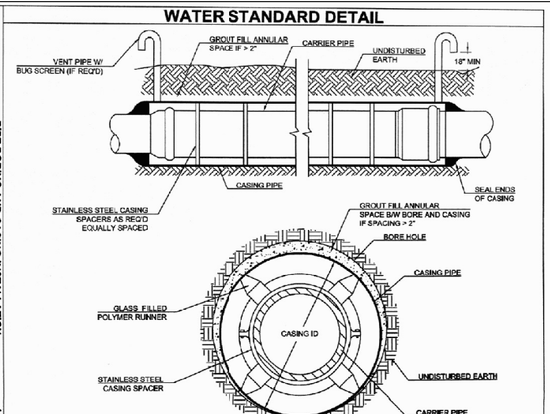

WATER STANDARD DETAIL

SINGLE LONG SERVICE NEW INSTALLATION — W-23

NOTE:
1. SERVICE SADDLES REQUIRED ON ALL TAPS UNLESS OTHERWISE SPECIFIED.
2. SERVICE SADDLES TO BE DOUBLE BAND BRASS SADDLES. (FORD METER BOX CO 202BS. OR APPROVED EQUAL).

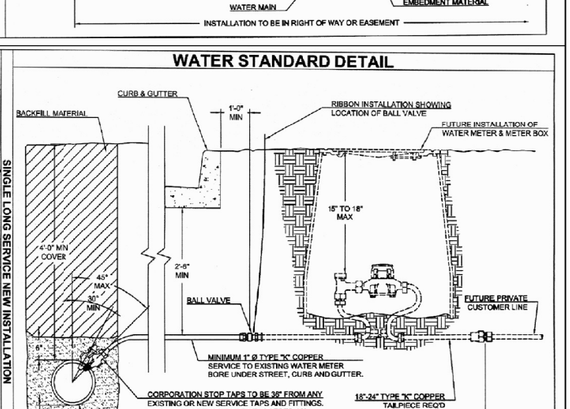

WATER STANDARD DETAIL

PIPE BORING AND CASING INSTALLATION — W-19 — 2 OF 2

NOTE:

SEALED CASING ENDS - NEOPRENE RUBBER END SEALS SECURED WITH 316 STAINLESS STEEL BANDING REQUIRED

PLUGGED PIPE ENDS - BOTH ENDS OF THE CASING PIPE SHALL BE PLUGGED WITH A NON-SHRINK GROUT OR CONCRETE HAVING A MINIMUM COMPRESSIVE STRENGTH OF 2500 PSI OR GROUTED MASONRY. EACH PLUG SHALL BE A MINIMUM LENGTH OF 12". GROUTING PRESSURE SHALL NOT EXCEED THE PIPE MANUFACTURER'S RECOMMENDATIONS.

VENT PIPES - VENT PIPES SHALL BE INSTALLED ON BOTH ENDS OF CASING FOR BORINGS THAT CROSS OOOT ROADS AND RAILROAD CROSSINGS. VENTS SHALL BE 2" DIA FOR CASING SIZES ≤ 30-IN. VENTS SHALL BE 4" DIA FOR CASING SIZES > 30-IN. VENTS SHALL HAVE A 90 DEG BEND TO POINT TOWARDS THE GROUND AND SHALL BE PAINTED INTERNATIONAL ORANGE. BUG SCREEN SHALL BE INCLUDED ON THE OPEN END OF VENT PIPE.

CASING PIPE SIZE - STEEL CASING PIPE SHALL HAVE THE FOLLOWING MINIMUM DIAMETER(S): SEE TABLE 1

CASING PIPE THICKNESS - STEEL CASING PIPE SHALL HAVE THE FOLLOWING MINIMUM THICKNESS(ES), IN INCHES, FOR THE INDICATED MAXIMUM DEPTH OF COVER(S), IN FEET: SEE TABLE 2

CASING MATERIAL - STEEL CASING PIPE SHALL CONFORM WITH ASTM A-139, STANDARD SPECIFICATION FOR ELECTRIC-FUSION (ARC) - WELDED STEEL PIPE (NPS4 AND OVER). THE STEEL MATERIAL SHALL BE NEW, SMOOTH WALL, CARBON STEEL, GRADE B, WITH A MINIMUM TENSILE STRENGTH AND MINIMUM THIRTY-FIVE-THOUSAND (35,000 PSI) POUNDS PER SQUARE INCH YIELD STRENGTH

TABLE 1
RECOMMENDED CASING SIZING

PIPE NOMINAL SIZE (INCHES)	SUGGESTED CASING PIPE INSIDE DIAMETER (INCHES)	PIPE NOMINAL SIZE (INCHES)	SUGGESTED CASING PIPE INSIDE DIAMETER (INCHES)
4	8 TO 10	20	28 TO 30
6	10 TO 12	24	31 TO 33
8	14 TO 16	30	36 TO 42
10	16 TO 18	36	42 TO 48
12	18 TO 20	42	54 TO 60
16	20 TO 22	48	60 TO 66
18	24 TO 26		

TABLE 2
CASING PIPE THICKNESS

Outside Diameter (Inches)	Under Highway: Wall Thickness (Inches)	Under Highway: Maximum Cover (Feet)	Under Railroad: BNSF (Uncoated) Wall Thickness (Inches)	Under Railroad: Union Pacific Wall Thickness (Inches)	Maximum Cover (Feet)
≤ 12	0.1880	30	0.2500	0.2500	30
16	0.2500	30	0.3125	0.3125	30
18	0.2500	30	0.3125	0.3125	30
20	0.2500	30	0.3750	0.3750	30
24	0.2500	30	0.4375	0.4375	30
30	0.3220	30	0.5000	0.5000	30
36	0.3750	30	0.5625	0.5625	30
42	0.3750	25	0.5625	0.5625	30
48	0.4380	25	0.6250	0.6250	25

SHEET NUMBER: W-STD-03
SCALE: AS SHOWN
DATE: 08/07/14
DRAWN BY: JDS
CHECKED BY: MWSDM

WATER STANDARD DETAILS

NO.	DATE	DESCRIPTION

The City of Oklahoma City
Utilities Department
Engineering Division

REVISIONS: DESCRIPTION | DATE

STATE JOB NO. 09032117 SHEET NO. WL10

PLOTTED: Tuesday, August 26, 2014 10:20:53 AM
FILE PATH: Z:\STANDARD DETAILS & WATER METER SPECIFICATIONS\UPDATED STANDARD DETAILS 2014\WATER\FINAL SHEETS\WAT-STD-DET-2014-SIGNED.DWG

WATER STANDARD DETAIL

METER BOX LID FOR PAVED AREAS - 1-1/2" & 2"

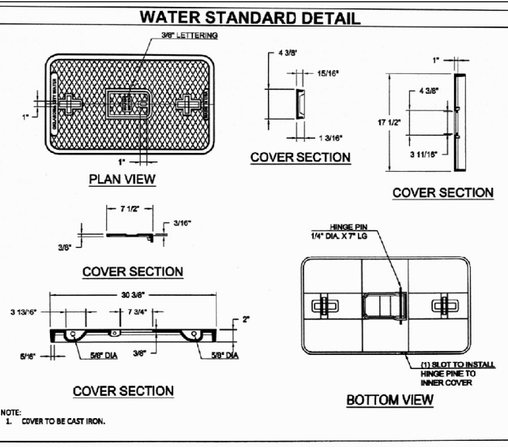

NOTE:
1. COVER TO BE CAST IRON.

DATE: 08/13/14 | APPROVED BY: OKLAHOMA CITY UTILITIES DEPARTMENT | DATE: 8/19/14 | W-28

WATER STANDARD DETAIL

METER BOX FOR GRASSY AREAS

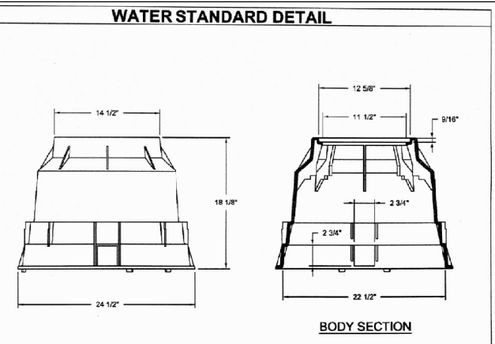

TYPICAL SPECIFICATIONS:
THE METER BOX SHALL BE HIGH-DENSITY POLYETHYLENE OF ONE-PIECE MOLDED CONSTRUCTION FOR DURABILITY AND IMPACT STRENGTH AND SHALL HAVE A WALL THICKNESS OF NO LESS THAN 0.375 INCHES. THE METER BOX SHALL BE IN CONFORMANCE WITH ASTM C857, WUC 3.6, AND SHALL BE PEDESTRIAN RUTED. METER BOX SHALL BE INSTALL IN GRASSY AREAS ONLY IN RIGHT-OF-WAY. METER BOX TO BE CARSON W2200-18 OR APPROVEE EQUAL.

DATE: 08/13/14 | APPROVED BY: OKLAHOMA CITY UTILITIES DEPARTMENT | DATE: 8/19/14 | W-24 | 1 OF 2

WATER STANDARD DETAIL

METER RELOCATION FOR STREET RESURFACING, SIDEWALKS, & ADA RAMPS

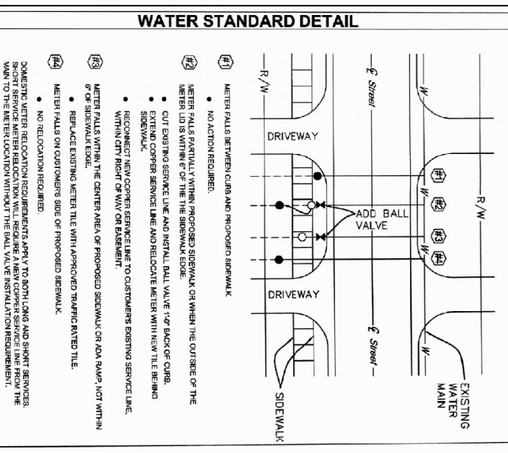

- NO ACTION REQUIRED.
- METER FALLS PARTIALLY WITHIN PROPOSED SIDEWALK OR WHEN THE OUTSIDE OF THE METER LID IS WITHIN 6" OF THE SIDEWALK EDGE.
  - CUT EXISTING SERVICE LINE AND INSTALL BALL VALVE 12" BACK OF CURB.
  - EXTEND COPPER SERVICE LINE AND RELOCATE METER WITH NEW TILE BEHIND SIDEWALK.
  - RECONNECT NEW COPPER SERVICE LINE TO CUSTOMERS EXISTING SERVICE LINE, WITHIN CITY RIGHT-OF-WAY OR EASEMENT.
- METER FALLS WITHIN THE CENTER AREA OF PROPOSED SIDEWALK OR ADA RAMP, NOT WITHIN 6" OF SIDEWALK EDGE.
  - REPLACE EXISTING METER TILE WITH APPROVED TRAFFIC RATED TILE.
- METER FALLS ON CUSTOMER'S SIDE OF PROPOSED SIDEWALK.
  - NO RELOCATION REQUIRED.
  - DOMESTIC METER RELOCATION REQUIREMENTS APPLY TO BOTH LONG AND SHORT SERVICES. CUSTOMER IS RESPONSIBLE FOR ALL COSTS ASSOCIATED WITH RELOCATING THE MAIN TO THE METER LOCATION WITHOUT THE BALL VALVE INSTALLATION REQUIREMENT.
- METER FALLS BETWEEN CURB AND PROPOSED SIDEWALK.

DATE: 08/13/14 | APPROVED BY: OKLAHOMA CITY UTILITIES DEPARTMENT | DATE: 8/19/14 | W-29

WATER STANDARD DETAIL

METER BOX FOR GRASSY AREAS

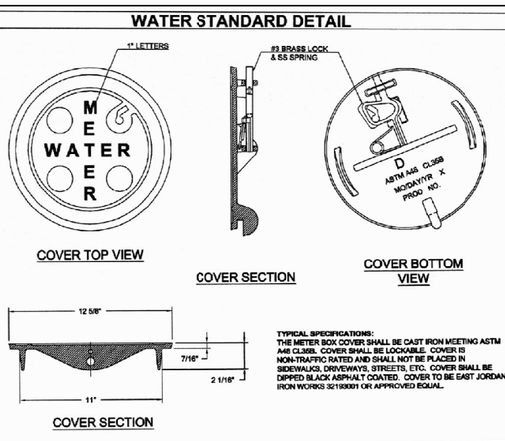

TYPICAL SPECIFICATIONS:
THE METER BOX COVER SHALL BE CAST IRON MEETING ASTM A48 CL30B. COVER SHALL BE LOCKABLE. COVER IS NON-TRAFFIC RATED AND SHALL NOT BE PLACED IN SIDEWALKS, DRIVEWAYS, STREETS, ETC. COVER SHALL BE DIPPED BLACK ASPHALT COATED. COVER TO BE EAST JORDAN IRON WORKS 3210001 OR APPROVED EQUAL.

DATE: 08/13/14 | APPROVED BY: OKLAHOMA CITY UTILITIES DEPARTMENT | DATE: 8/19/14 | W-25 | 1 OF 2

WATER STANDARD DETAIL

WATER METER VAULT INSTALLATION

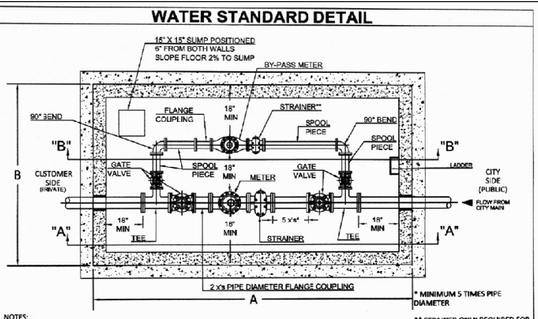

NOTES:
1. INSTALLATION OF FLANGED COUPLING AND STRAINER REQUIRED ON 3" BY-PASS METERS AND LARGER.
2. ALL DUCTILE IRON JOINTS INSIDE THE VAULT SHALL BE FLANGED.
3. PROVIDE STRAIGHT PIPE UPSTREAM AND DOWNSTREAM OF METER/STRAINER IN ACCORDANCE WITH MANUFACTURER'S REQUIREMENTS.
4. HATCH COVER TO BE HALLIDAY OR EQUAL WITH SAFETY FALL GRATING.
5. FOR WALL AND FLOOR STEEL REINFORCEMENT REQUIREMENTS, SEE METER VAULT SHEET W-35.

** STRAINER ONLY REQUIRED FOR 3-IN BYPASS AND LARGER

Meter Size	By-Pass Size	A	B
3"	2"	12'-2"	7'-10"
4"	2"	13'-8"	7'-10"
6"	3"	16'-4"	8'-2"

DATE: 08/13/14 | APPROVED BY: OKLAHOMA CITY UTILITIES DEPARTMENT | DATE: 8/19/14 | W-30 | 1 OF 6

WATER STANDARD DETAIL

METER BOX FOR PAVED AREAS

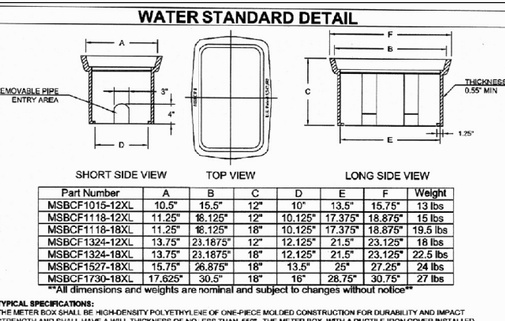

Part Number	A	B	C	D	E	F	Weight
MSBCF1015-12XL	10.5"	15.5"	12"	10"	13.5"	15.75"	13 lbs
MSBCF1118-12XL	11.25"	18.125"	12"	10.125"	17.375"	18.875"	15 lbs
MSBCF1118-18XL	11.25"	18.125"	18"	10.125"	17.375"	18.875"	19.5 lbs
MSBCF1324-12XL	13.75"	23.1875"	12"	12.125"	21.5"	23.125"	18 lbs
MSBCF1324-18XL	13.75"	23.1875"	18"	12.125"	21.5"	23.125"	22.5 lbs
MSBCF1527-18XL	15.75"	26.875"	18"	13.5"	25"	27.25"	24 lbs
MSBCF1730-18XL	17.625"	30.5"	18"	16"	28.75"	30.75"	27 lbs

All dimensions and weights are nominal and subject to changes without notice

TYPICAL SPECIFICATIONS:
THE METER BOX SHALL BE HIGH-DENSITY POLYETHYLENE OF ONE-PIECE MOLDED CONSTRUCTION FOR DURABILITY AND IMPACT STRENGTH AND SHALL HAVE A WALL THICKNESS OF NO LESS THAN .550". THE METER BOX, WITH A DUCTILE IRON COVER INSTALLED, SHALL BE ABLE TO BEAR A 20,000 LB. LOAD IN A WHEEL LOAD (H-20) STYLE TEST. METER BOX SHALL BE ABLE TO WITHSTAND A 200 LB. SIDE LOAD APPLIED WITH A 4"X4" PLATE 1" DOWN FOR THE TOP CENTER OF THE BOX, WITHOUT DEFLECTING MORE THAN 1". THE METER BOX SHALL BE BLACK ON THE EXTERIOR TO PREVENT UV DEGRADATION. THE BOX SHALL BE DESIGNED IN SUCH A WAY AS TO HAVE AN INTEGRAL FLANGE, NO MORE THAN 3" FROM THE TOP, TO SUPPORT THE BOX IN CONCRETE, PAVING OR SOIL, AND A BOTTOM FLANGE A MINIMUM OF 1" WIDE TO HELP RETARD SETTLING. THE BOX SHALL HAVE REMOVABLE, PRE-CUT PIPE ENTRY AREAS, 3" WIDE X 4" HIGH, LOCATED ON THE CENTER OF EACH END (SHORT SIDE) OF THE BOX FOR SINGLE METER INSTALLATIONS, AND A 3 PRE-CUT PIPE ENTRY AREAS (SINGLE IN, DUAL OUT) FOR DUAL METER INSTALLATIONS. THE BOX SHALL BE DESIGNED IN SUCH A WAY AS TO BE SECURELY STACKABLE, AND SHALL BE AVAILABLE IN 12" AND 18" HEIGHTS AS INSTALLATION CONDITIONS MAY REQUIRE. THE BOX SHALL WEIGH NO MORE THAN LISTED WEIGHT FOR EACH METER SIZE FOR SAFETY AND EASE OF HANDLING, TRANSPORT AND INSTALLATION. ALL DIMENSIONS SHALL BE IN ACCORDANCE WITH THE ABOVE DRAWING (S) FOR THE APPROPRIATE SIZE METER. THE METER BOX SHALL BE MSBCF-XL AS MANUFACTURED BY MID-STATES PLASTICS INC. OR EQUAL.

DATE: 08/13/14 | APPROVED BY: OKLAHOMA CITY UTILITIES DEPARTMENT | DATE: 8/19/14 | W-26

WATER STANDARD DETAIL

WATER METER VAULT INSTALLATION

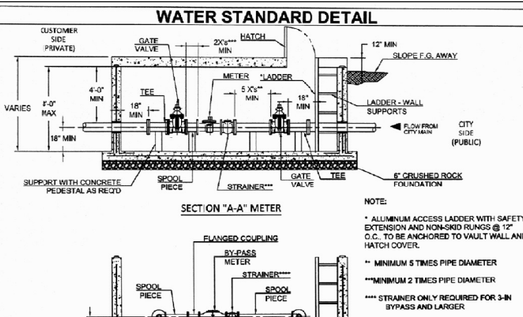

NOTE:
* ALUMINUM ACCESS LADDER WITH SAFETY EXTENSION AND NON-SKID RUNGS @ 12" O.C. TO BE ANCHORED TO VAULT WALL AND HATCH COVER.
** MINIMUM 5 TIMES PIPE DIAMETER
***MINIMUM 2 TIMES PIPE DIAMETER
**** STRAINER ONLY REQUIRED FOR 3-IN BYPASS AND LARGER

DATE: 08/13/14 | APPROVED BY: OKLAHOMA CITY UTILITIES DEPARTMENT | DATE: 8/19/14 | W-31 | 2 OF 6

WATER STANDARD DETAIL

METER BOX LID FOR PAVED AREAS - 5/8" & 1"

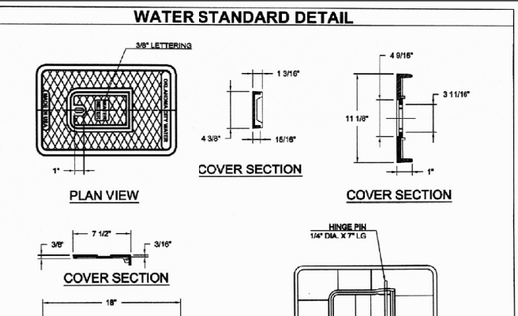

NOTE:
1. COVER TO BE CAST IRON.

DATE: 08/13/14 | APPROVED BY: OKLAHOMA CITY UTILITIES DEPARTMENT | DATE: 8/19/14 | W-27

NO.	DATE	DESCRIPTION

WATER
STANDARD DETAILS

SHEET NUMBER: W-STD-04

SCALE: AS SHOWN

DATE: 08/07/14
DRAWN BY: JSS
CHECKED BY: MWSDOM

The City of Oklahoma City
Utilities Department
Engineering Division

STATE JOB NO. 0903217 | SHEET NO. WL11

DESCRIPTION | REVISIONS | DATE

PLOTTED: Tuesday, August 26, 2014 10:22:48 AM
FILE PATH: Z:\STANDARD DETAILS & WATER METER SPECIFICATIONS\UPDATED STANDARD DETAILS 2014\WATER\FINAL SHEETS\WAT-STD-DET-2014-SIGNED.DWG

WATER STANDARD DETAIL

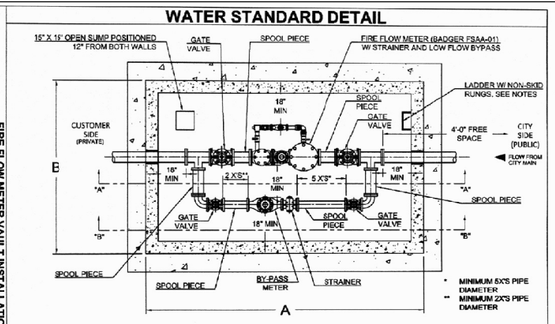

NOTES:
1. ALL DUCTILE IRON JOINTS INSIDE THE VAULT SHALL BE FLANGED.
2. PROVIDE STRAIGHT PIPE UPSTREAM AND DOWNSTREAM OF METER/STRAINER IN ACCORDANCE WITH MANUFACTURER'S REQUIREMENTS.
3. HATCH COVER TO BE HALLIDAY OR EQUAL WITH SAFETY FALL GRATING.
4. LADDER TO BE INSTALLED WITH LADDER-UP SAFETY POST EXTENSION.
5. FOR WALL AND FLOOR STEEL REINFORCEMENT REQUIREMENTS, SEE METER VAULT SHEET W-40.
6. 6" AND ABOVE TURBINE (TURBO) METERS NEEDS APPROVAL FROM METER SHOP SUPERVISOR.

Meter Size	By-Pass Size	A	B
6"	3"	15'-6"	9'-6"
8"	4"	17'-0"	11'-0"
10"	6"	20'-0"	13'-6"
12"	8"	22'-0"	15'-6"

FIRE FLOW METER VAULT INSTALLATION
W-36 | 1 OF 5

WATER STANDARD DETAIL

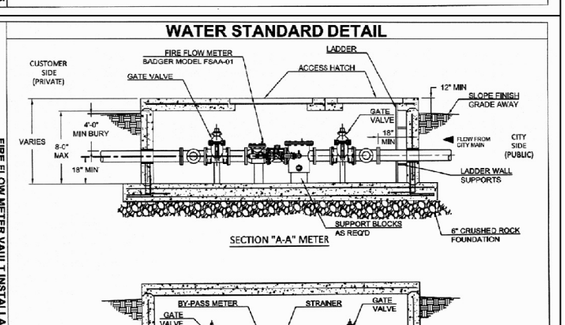

NOTE:
1. ALUMINUM ACCESS LADDER WITH SAFETY EXTENSION AND NON-SKID RUNGS @ 12" O.C., TO BE ANCHORED TO VAULT WALL AND HATCH COVER.

FIRE FLOW METER VAULT INSTALLATION
W-37 | 2 OF 5

WATER STANDARD DETAIL

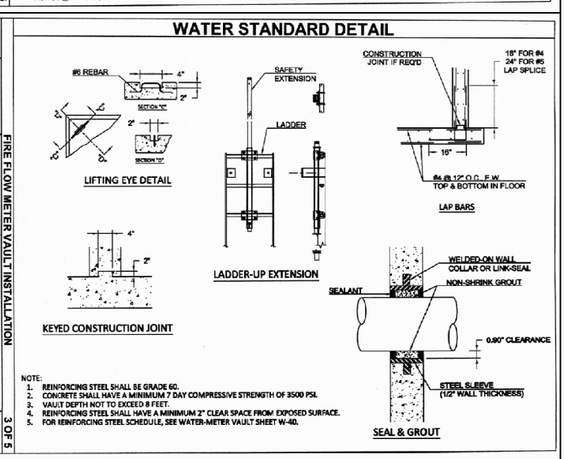

NOTE:
1. REINFORCING STEEL SHALL BE GRADE 60.
2. CONCRETE SHALL HAVE A MINIMUM 7 DAY COMPRESSIVE STRENGTH OF 3500 PSI.
3. VAULT DEPTH NOT TO EXCEED 8 FEET.
4. REINFORCING STEEL SHALL HAVE A MINIMUM 2" CLEAR SPACE FROM EXPOSED SURFACE.
5. FOR REINFORCING STEEL SCHEDULE, SEE WATER-METER VAULT SHEET W-40.

FIRE FLOW METER VAULT INSTALLATION
W-38 | 3 OF 5

WATER STANDARD DETAIL

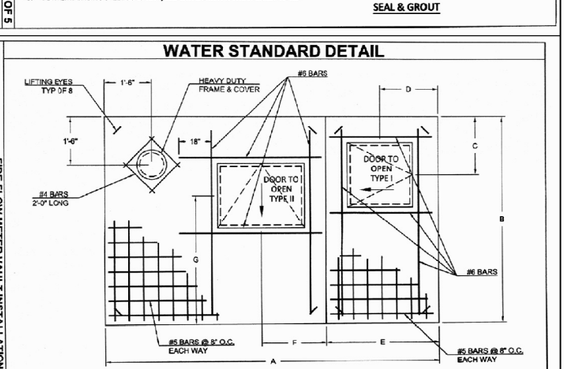

Meter Size	By-Pass Size	A	B	C	D	E	F	G	Door Size - I	Door Size - II
6"	3"	15'-6"	9'-6"	2'-6"	2'-8"	4'-8"	3'-2"	6'-2"	H1R-36-36	H1R-36-43
8"	4"	17'-0"	11'-0"	2'-6"	2'-8"	6'-0"	3'-2"	7'-6"	H1R-36-36	H1R-36-42
10"	6"	20'-0"	13'-6"	2'-6"	2'-8"	8'-0"	3'-2"	10'-6"	H1R-36-36	H1R-36-42
12"	8"	20'-0"	15'-6"	2'-6"	2'-8"	8'-0"	3'-2"	12'-6"	H1R-36-36	H1R-36-42

FIRE FLOW METER VAULT INSTALLATION
W-39 | 4 OF 5

WATER STANDARD DETAIL

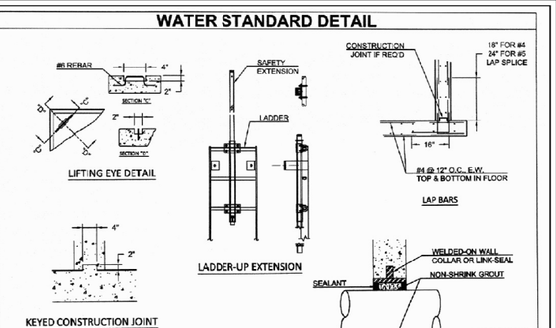

NOTE:
1. REINFORCING STEEL SHALL BE GRADE 60.
2. CONCRETE SHALL HAVE A MINIMUM 7 DAY COMPRESSIVE STRENGTH OF 3500 PSI.
3. VAULT DEPTH NOT TO EXCEED 8 FEET.
4. REINFORCING STEEL SHALL HAVE A MINIMUM 2" CLEAR SPACE FROM EXPOSED SURFACE.
5. FOR REINFORCING STEEL SCHEDULE, SEE WATER-METER VAULT SHEET W-35.

WATER METER VAULT INSTALLATION
W-32 | 3 OF 6

WATER STANDARD DETAIL

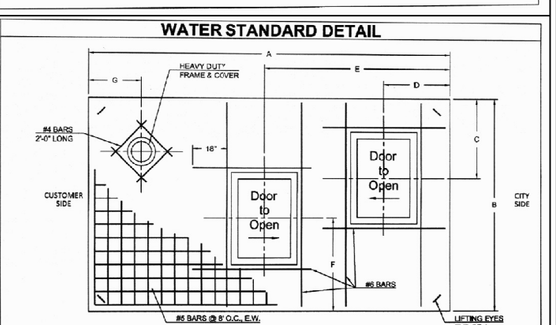

NOTE:
1. PROVIDE WATER TIGHT SEAL BETWEEN LID AND WALLSIN ACCORDANCE WITH SEC. 932.08 (F) OF OKC STANDARD SPECIFICATIONS FOR CONSTRUCTION OF PUBLIC IMPROVEMENTS.
2. DOORS SHALL BE HALLIDAY DOORS, SERIES H1R (H20 LOAD RATED) OR APPROVED EQUAL W/ SAFETY FALL GRATING.
3. HEAVY DUTY FRAME AND COVER TO BE EAST JORDAN IRON V1610-3 SERIES OR EQUAL.
4. LIFTING EYES TO BE EMBEDDED #6 REBAR. GROUT FILLWHEN VAULT IS IN SIDEWALK, DRIVEWAY, AND/OR PARKING LOT.

Meter Size	By-Pass Size	A	B	C	D	E	F	G	Door Size
3"	2"	12'-2"	7'-10"	3'-0"	2'-6"	6'-9"	3'-6"	2'-0"	H1R-24-36
4"	3"	13'-8"	7'-10"	3'-0"	2'-6"	7'-0"	3'-6"	2'-0"	H1R-24-36

WATER METER VAULT INSTALLATION
W-33 | 4 OF 6

WATER STANDARD DETAIL

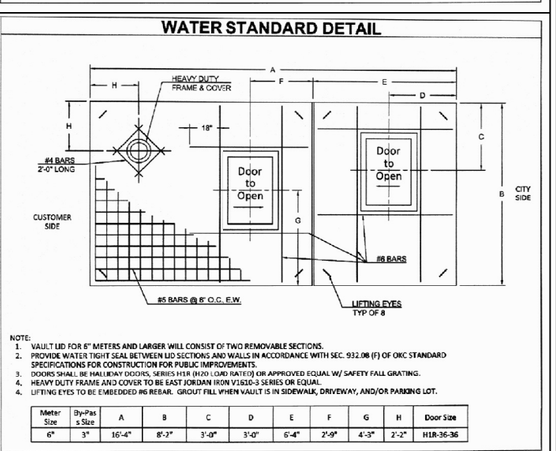

NOTE:
1. VAULT LID FOR 8" METERS AND LARGER WILL CONSIST OF TWO REMOVABLE SECTIONS.
2. PROVIDE WATER TIGHT SEAL BETWEEN LID SECTIONS AND WALLS IN ACCORDANCE WITH SEC. 932.08 (F) OF OKC STANDARD SPECIFICATIONS FOR CONSTRUCTION FOR PUBLIC IMPROVEMENTS.
3. DOORS SHALL BE HALLIDAY DOORS, SERIES H1R (H20 LOAD RATED) OR APPROVED EQUAL W/ SAFETY FALL GRATING.
4. HEAVY DUTY FRAME AND COVER TO BE EAST JORDAN IRON V1610-3 SERIES OR EQUAL.
4. LIFTING EYES TO BE EMBEDDED #6 REBAR. GROUT FILL WHEN VAULT IS IN SIDEWALK, DRIVEWAY, AND/OR PARKING LOT.

Meter Size	By-Pass Size	A	B	C	D	E	F	G	H	Door Size
6"	3"	16'-4"	8'-3"	3'-0"	3'-0"	6'-4"	2'-9"	4'-3"	2'-2"	H1R-36-36

WATER METER VAULT INSTALLATION
W-34 | 5 OF 6

WATER STANDARD DETAIL

Reinforcing Schedule for Concrete Vaults

Meter Size	By-Pass Size	Design No.	Depth (feet)	A	B	Wall Thickness	Floor Thickness	Vertical Bars		Horizontal Bars		Top Thickness	Top Bars	
								Size	Spacing	Size	Spacing		Size	Spacing
3"	2"	1	5	12'-2"	7'-10"	8	10	4	12	4	12	8	5	8
		2	6	12'-2"	7'-10"	8	10	4	9	4	12	8	5	8
		3	7	12'-2"	7'-10"	8	10	5	12	4	12	8	5	8
		4	8	12'-2"	7'-10"	8	10	5	9	4	12	8	5	8
4"	3"	5	5	13'-8"	7'-10"	8	10	4	12	4	12	8	5	8
		6	6	13'-8"	7'-10"	8	10	4	9	4	12	8	5	8
		7	7	13'-8"	7'-10"	8	10	5	12	4	12	8	5	8
		8	8	13'-8"	7'-10"	8	10	5	9	4	12	8	5	8
6"	3"	9	5	16'-4"	8'-2"	8	10	4	12	4	12	8	5	8
		10	6	16'-4"	8'-2"	8	10	4	9	4	12	8	5	8
		11	7	16'-4"	8'-2"	8	10	5	12	4	12	8	5	8
		12	8	16'-4"	8'-2"	8	10	5	9	4	12	8	5	8

NOTES:
1. ALL REINFORCING REBAR SHALL BE GRADE 60.
2. TOP BARS SHALL BE PLACED IN TWO MATS. BAR SIZE AND SPACING SHALL IN EACH DIRECTION BE INCLUDED IN EACH MAT OF STEEL
3. FLOOR REINFORCING USE #4 BARS @ 12" C/C EACH WAY FOR THE TOP MAT AND THE BOTTOM MAT OF REINFORCING.
4. WALL, FLOOR AND TOP THICKNESS ARE IN INCHES. STEEL REINFORCEMENT SPACING IS IN INCHES.

WATER METER VAULT INSTALLATION
W-35 | 6 OF 6

SHEET NUMBER: W-STD-05
SCALE: AS SHOWN
DATE: 08/07/14
DRAWN BY: JDS
CHECKED BY: MANSOUR

WATER STANDARD DETAILS

NO.	DATE	DESCRIPTION

The City of Oklahoma City
Utilities Department
Engineering Division

REVISIONS: DESCRIPTION | DATE

STATE JOB NO. 0903217 SHEET NO. WL12

PLOTTED: Tuesday, August 26, 2014 10:24:45 AM
FILE PATH: Z:\STANDARD DETAILS & WATER METER SPECIFICATIONS\UPDATED STANDARD DETAILS 2014\WATER\FINAL SHEETS\WAT-STD-DET-2014-SIGNED.DWG

WATER STANDARD DETAIL

HORIZONTAL THRUST BLOCK - TEES, PLUGS, VALVES

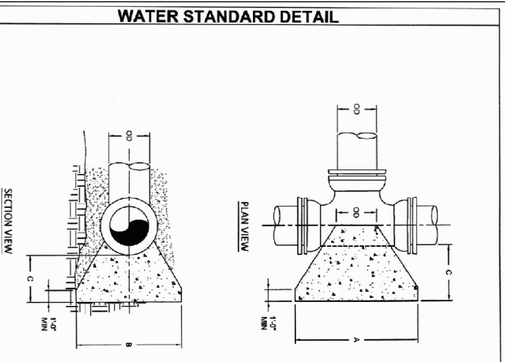
SECTION VIEW
PLAN VIEW
8"
8"
8"
C
C
A
A
8"
8"
8"

ESTIMATED QUANTITIES

ITEM NO.	SPEC NO.	DESCRIPTION	UNIT	TOTAL QUANTITY	AS-BUILT QUANTITY
City of Oklahoma City Project Area Construction					
1	212	TRENCH EXCAVATION AND BACKFILL - ZERO (0) FT TO TEN (10) FT	LF	40	
2	212	TRENCH EXCAVATION AND BACKFILL - ZERO (0) FT TO FIFTEEN (15) FT	LF	2,010	
3	212	TRENCH EXCAVATION AND BACKFILL - ZERO (0) FT TO TWENTY (20) FT	LF	861	
4	215	EMBEDMENT MATERIAL	TON	1,460	
5	610	8-IN SANITARY SEWER PIPE	LF	560	
6	610	12-IN SANITARY SEWER PIPE	LF	388	
7	610	24-IN SANITARY SEWER PIPE	LF	1,963	
8	626	SANITARY SEWER MANHOLE (4 FT DIAMETER) (0 - 6FT)	EA	5	
9	626	EXTRA DEPTH MANHOLE WALL (4 FT DIAMETER)	VF	51	
10	626	SANITARY SEWER MANHOLE (5 FT DIAMETER) (0 - 6FT)	EA	9	
11	626	EXTRA DEPTH MANHOLE WALL (5 FT DIAMETER)	VF	72	
12	618	SEWER FLOW CONTROL	LS	1	
13	624	POST-CONSTRUCTION CCTV INSPECTION	LF	2,927	
14	812	REMOVE AND REPLACE CONCRETE CURB & GUTTER	LF	500	
15	814	PAVEMENT CUT AND PERMANENT REPAIR (CONCRETE PARKING LOT)	SY	3,195	
16	828	REMOVE AND REPLACE FENCE TYPE II	LF	50	
17	802	CONSTRUCTION TRAFFIC CONTROL	LS	1	
18	810	CLEARING AND GRUBBING	LS	1	
19	109.09	SEDIMENT AND EROSION CONTROL	LS	1	
20	840	SOLID SLAB SODDING	SY	10,600	
21	801	CONSTRUCTION STAKING	LS	1	
22	814.07	PAVEMENT CUT & REPAIR (ASPHALT)	SY	801	
23	SPECIAL	GPS AS-BUILT SURVEY	LS	1	
24	109.08	COLOR AUDIO / VIDEO RECORDING PRE AND POST CONSTRUCTION (RECORDED DIGITALLY ON DVD)	LS	1	
25	252	BORING (12-IN CARRIER)	LF	304	
26	654	STEEL CASING PIPE (12-IN CARRIER)	LF	304	
27	252	BORING (24-IN CARRIER)	LF	435	
28	654	STEEL CASING PIPE (24-IN CARRIER)	LF	559	
29	623	DEFLECTION TEST (<24-IN)	LS	1	
30	625	SANITARY LEAKAGE TEST (<24-IN)	LS	1	
31	623	DEFLECTION TEST (≥24 IN)	LF	1,963	
32	625	SANITARY LEAKAGE TEST (≥24-IN)	LF	1,963	
33	614	ABANDON SEWER	CY	215	
34	648	REMOVE MANHOLE	EA	3	
35	648	ABANDON MANHOLE	EA	4	

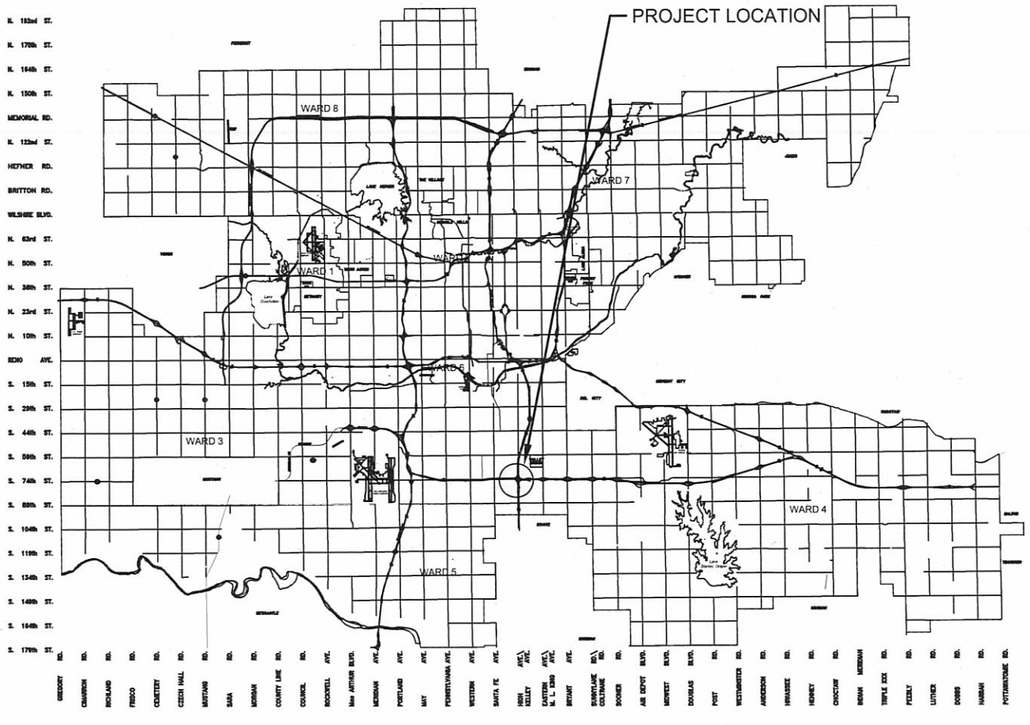

SANITARY SEWER PROJECT SC-0976
SANITARY SEWER RELOCATION FOR
I-35 & I-240 INTERCHANGE IMPROVEMENTS

IN THE VICINITY OF

I-35 AND I-240
BETWEEN
S. SHIELDS BLVD. & S. I-35 SERVICE RD.
AND
BETWEEN
S.E. 82nd STREET & S.E. 66th STREET
ALONG BYERS AVENUE

The City of
OKLAHOMA CITY

MICK CORNETT, Mayor

COUNCIL MEMBERS:

JAMES GREINER	Ward	1
ED SHADID	Ward	2
LARRY McATEE	Ward	3
PETE WHITE	Ward	4
DAVID GREENWELL	Ward	5
MARGARET S. "MEG" SALYER	Ward	6
JOHN A. PETTIS JR.	Ward	7
MARK K. STONECIPHER	Ward	8

JAMES D. COUCH, City Manager

ERIC J. WENGER, P.E., City Engineer

Oklahoma City Water Utilities Trust

OKLAHOMA CITY WATER UTILITIES TRUST

PETE WHITE, Chairman, Council Trustee
CARL EDWARDS, Vice-Chairman, Independent Trustee
CODY GRAVES, Independent Trustee
MICK CORNETT, Mayor Trustee
DAVID GREENWELL, Surrogate Trustee
JAMES D. COUCH, City Manager Trustee
DENNIS CLOWERS, Surrogate Trustee
MARSHA W. SLAUGHTER, P.E., General Manager
FRANCES KERSEY, Secretary

SHEET INDEX

SHEET NO.	DESCRIPTION
1	TITLE SHEET & ESTIMATED QUANTITIES
2	LOCATION MAP & VICINITY MAP
3	GENERAL NOTES
4-7	PLAN AND PROFILE SHEETS
8	REMOVAL DETAIL SHEET
9-12	SANITARY SEWER STANDARDS

ONE CALL UTILITY LOCATION NUMBER

840-5032
1-800-522-6543

This number is to be used for information on the location of all underground utilities. Contact this number and other numbers specified in the plans prior to any excavation.

UTILITIES DEPARTMENT
CAPITAL IMPROVEMENT DESIGN

PREPARED BY

RICHARD M. GROTTE, P.E.
DESIGN ENGINEER
POE & ASSOCIATES, INC.
1601 N.W. EXPRESSWAY STE. 400
OKLA. CITY, OKLAHOMA 73118
OFFICE (405) 949-1962 & (405)608-0380
COA NO. 541

9/9/16 DATE

REGISTERED PROFESSIONAL ENGINEER RICHARD M. GROTTE 12168 OKLAHOMA

RECOMMENDED FOR APPROVAL

MARSHA W. SLAUGHTER, P.E.
UTILITIES DIRECTOR — DATE

ERIC J. WENGER, P.E.
CITY ENGINEER — DATE

APPROVED BY THE TRUSTEES AND SIGNED BY THE CHAIRMAN OF THE OKLAHOMA CITY WATER UTILITIES TRUST

CHAIRMAN — DATE

SECRETARY — DATE

STATE JOB NO. 09032(17) SHT. SS01

9/14/2016 2:18:43 PM
O:\PROJECTS\SC0976\Utilities\Sewer\CADDRAWINGS\PHASE 1A-SC0976\CADDRAWINGS\SANITARY SEWER_COVER SHEET.dwg
OKC WC-0816 & SC-0911 & SC-0959 & SC-0976

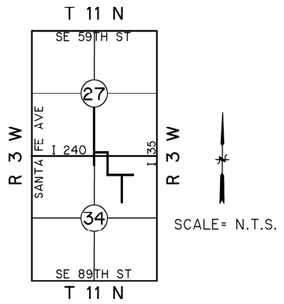

SCALE= N.T.S.

REVISIONS	
DESCRIPTION	DATE

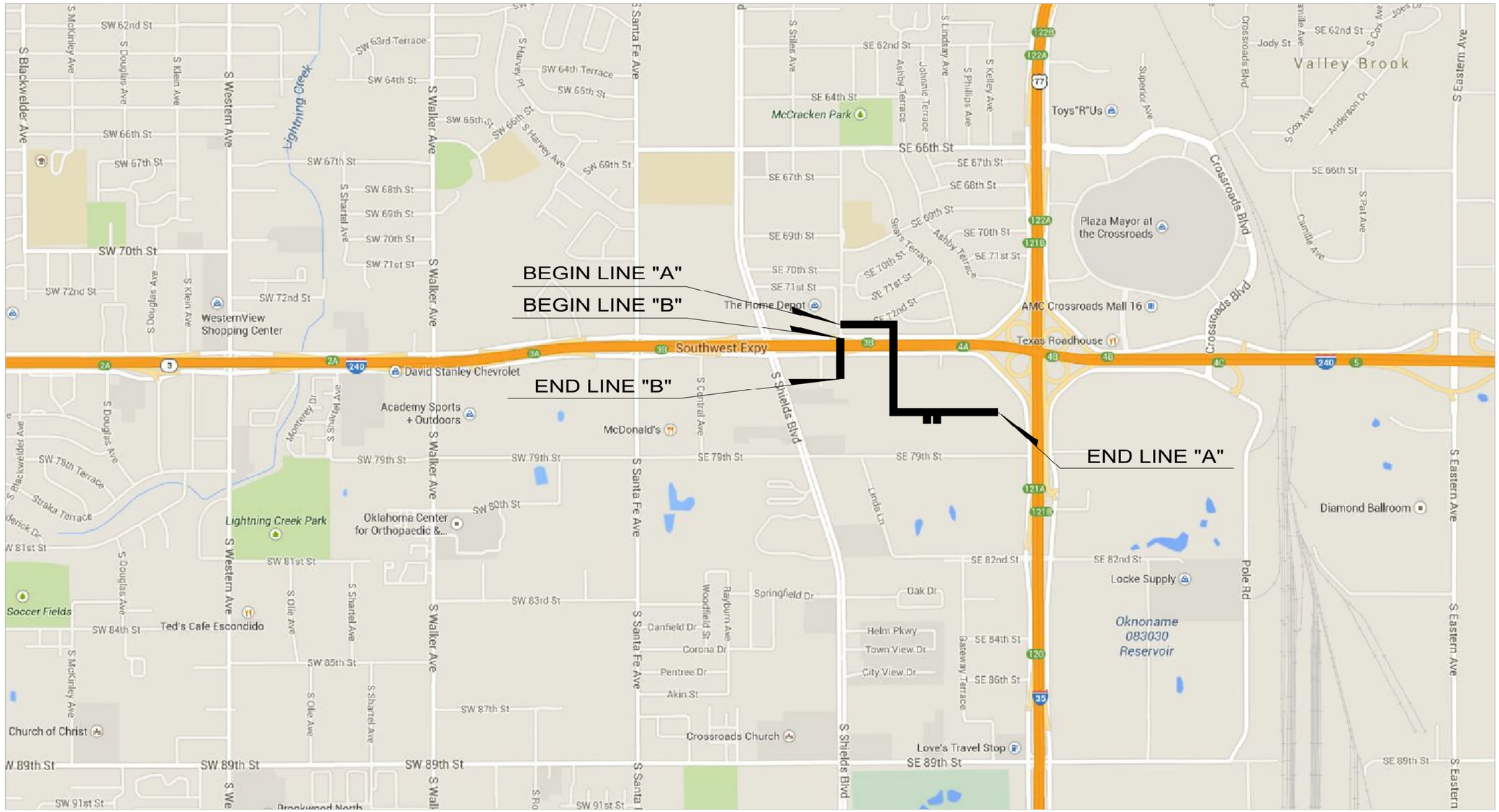

SCALE= N.T.S.

PROJECT NO. SC-0976

DESIGN	RMG	12/14
DRAWN	CDS	12/14
CHECKED	RMG	12/14
APPROVED	RMG	12/14
SQUAD	POE	

SANITARY SEWER LOCATION SHEET

STATE JOB NO. 09032(17) SHEET NO. SS02

9/9/2016 9:21:49 AM
G:\PROJECTS\20033 OKC WC-0816 & SC-0911 & SC-0959 & SC-0976\Utilities\Sewer\CADDRAWINGS\PHASE 1A-SC0976\CADDRAWINGS\SANITARY SEWER_LOCATION SHEET_2.dwg

REVISIONS	
DESCRIPTION	DATE

GENERAL NOTES:

1.) ALL CONSTRUCTION OF WATER AND SANITARY SEWER SHALL BE IN ACCORDANCE WITH THE CITY OF OKLAHOMA CITY STANDARD SPECIFICATIONS FOR CONSTRUCTION OF PUBLIC IMPROVEMENTS.

2.) COMPACTION OF TRENCH BACKFILL IN PAVED AREAS SHALL BE A MINIMUM OF 95% OF STANDARD PROCTOR DENSITY.

3.) THE CONTRACTOR SHALL BE RESPONSIBLE FOR THE PLACEMENT OR REPAIR OF TRAFFIC CONTROL DEVICES DAMAGED DURING CONSTRUCTION.

4.) THE CONTRACTOR SHALL CONTACT OKLAHOMA CITY TRAFFIC OPERATIONS AT 297-2648 SEVENTY-TWO (72) HOURS PRIOR TO THE START OF CONSTRUCTION FOR TRAFFIC SIGNAL CONDUIT LOCATION.

5.) THE CONTRACTOR SHALL FIELD VERIFY ALL EXISTING UTILITIES PRIOR TO CONSTRUCTION. THE CONTRACTOR SHALL BE RESPONSIBLE FOR THE REPLACEMENT OR REPAIR OF ALL PRIVATE AND PUBLIC UTILITIES DAMAGED DURING CONSTRUCTION.

6.) ALL CROSSINGS AND PROPOSED TIE-IN LOCATIONS SHALL BE EXCAVATED AHEAD OF CONSTRUCTION TO VERIFY THE FLOWLINE OF EXISTING WATER MAINS.

7.) THE CONTRACTOR SHALL BE RESPONSIBLE FOR THE CONSTRUCTION STAKING. THE STAKING MUST BE DONE BY A REGISTERED PROFESSIONAL LAND SURVEYOR WHICH WILL BE VERIFIED AT PRE-WORK CONFERENCE.

8.) THE CONTRACTOR SHALL BE RESPONSIBLE FOR THE REPAIR OR REPLACEMENT OF ALL EROSION CONTROL DEVICES DAMAGED DUE TO CONSTRUCTION.

9.) A COPY OF THE EROSION CONTROL PLAN MUST BE ON SITE AT ALL TIMES AND MADE AVAILABLE TO THE INSPECTOR UPON REQUEST.

10.) CONSTRUCTION ACTIVITIES THAT RESULT IN LAND DISTURBANCE OF EQUAL TO OR GREATER THAN ONE (1) ACRE MUST OBTAIN A PERMIT FROM ODEQ (FORM 605-002a) FOR STORM DISCHARGES FROM CONSTRUCTION ACTIVITIES AND A PERMIT FROM THE CITY OF OKLAHOMA CITY, STORM WATER QUALITY.

11.) THE CONTRACTOR SHALL KEEP THE OPEN TRENCH DRAINED. COST TO BE INCLUDED IN OTHER ITEMS OF WORK.

12.) NO PAYMENT WILL BE MADE FOR THE REMOVAL OF ABANDONED UTILITY PIPE LINES THAT INTERFERE WITH CONSTRUCTION. ALL COST TO BE INCLUDED IN OTHER ITEMS.

13.) ALL WORK AND/OR MATERIALS NOT CLASSIFIED AS A "CONTRACT PAY ITEM" SHALL BE CONSIDERED INCIDENTAL AND THE COST THEREOF SHALL BE INCLUDED IN THE UNIT PRICE BID FOR ITEMS WHICH ARE CLASSIFIED FOR PAYMENT.

14.) THE CONTRACTOR SHALL BE RESPONSIBLE FOR ANY DAMAGE HE MAY INFLICT TO THE EXISTING UNDERGROUND UTILITIES WITHIN THE PROJECT AREA AS A RESULT OF HIS DIGGING, TRENCHING, BORING, ETC,. PRIOR TO DIGGING NEAR THE UTILITIES, THE CONTRACTOR SHALL CALL FOR A LIST OF ALL UNDER GROUND FACILITIES REGISTERED IN THE AREA OF CONSTRUCTION LISTED WITH THE FOLLOWING AGENCIES:
THE "OKIE" NOTIFICATION CENTER (405) 840-5021 OR 1-800-522-6543.

15.) IN THE EVENT THE EXISTING SECTION LINE ROADS OR PUBLIC ROAD ARE IN ANY WAY DISTURBED AS A RESULT OF THE CONTRACTORS EFFORTS, IT SHALL BE THE RESPONSIBILITY OF SAID CONTRACTOR TO RETURN THE AREA TO ITS ORIGINAL CONDITION WITH NO ADDITIONAL COMPENSATION AS DIRECTED AND TO THE SATISFACTION OF THE ENGINEER.

16.) A CONTRACTOR'S PROGRESS SCHEDULE SHALL BE PREPARED IN ACCORDANCE WITH SECTION 108A OF THE 1999 STANDARD SPECIFICATIONS FOR HIGHWAY CONSTRUCTION.

17.) ALL MATERIAL REMOVED SHALL BECOME THE PROPERTY OF THE CONTRACTOR AND SHALL BE DISPOSED OF IN A MANNER APPROVED BY THE ENGINEER.

18.) SEWER MANHOLES SHOULD HAVE NON-VENTED MANHOLE LIDS WITH RAIN GUARD INFLOW PROTECTORS.

DESIGN	RMG	10/15
DRAWN	CDS	10/15
CHECKED	RMG	10/15
APPROVED	RMG	10/15
SQUAD	POE	

SANITARY SEWER GENERAL NOTES

STATE JOB NO. 09032(17) SHEET NO. SS03

9/9/2016 9:23:41 AM
G:\PROJECTS\20303 OKC WC-0816 & SC-0911 & SC-0959 & SC-0976\Utilities\Sewer\CADDRAWINGS\PHASE 1A-SC0976\CADDRAWINGS\SANITARY SEWER_GEN NOTES.dwg

SEC.27, T-11-N, R-3-W

REVISIONS	
DESCRIPTION	DATE

50 0 50 100
SCALE: 1"=50'

NOTE:
*TOP OF RIM TO MATCH EXISTING TOP OF PAVEMENT

S. BYERS AV.

S.E. 72nd ST.

(BY OTHERS)

LINE "A" (EXISTING)

A-9
STA. 97+11.85-CL SW SERV RD, 520.59' LT.
EXIST. 6' MANHOLE

LINE "B" (SEE SHEET 7)

A-10
STA. 25+76.00 LINE "A"
EXIST. 5' MANHOLE

REMOVE & REPLACE 500 L.F. 1'-8" CONC. CURB & GUTTER (6" BARRIER)

A-11
STA. 28+27.00 LINE "A"
CONST. PROP. 5' M.H.
TR= 1266.14*

A-13
STA. 30+20.10 LINE "A"
CONST. PROP. 5' M.H.
TR= 1269.44*

A-13B
STA. 30+84.60 LINE "A"
CONST. PROP. 5' M.H.
TR= 1270.00*

A-14
STA. 30+98.00 LINE "A"
CONST. PROP. 5' M.H.
TR= 1270.04*

251 L.F. OF 24" PVC PIPE

6'

8'x4' RCB

102 L.F. OF 24" PVC PIPE

91 L.F. OF 24" PVC PIPE

65 L.F. OF 24" PVC PIPE

A-12
STA. 29+29.00 LINE "A"
CONST. PROP. 5' M.H.
TR= 1268.06*

120 L.F. OF STEEL CASING FOR 24" SANITARY SEWER BY TRENCHING

B-1 (EXISTING)

B-2 (EXISTING)

405

70

BM#8 - "X" ON CURB @ 521 S.E. 72ND STREET 317.43' LT, ℄ I-240 I-240 STA. 406+48.06 EL=1267.15
BM#21 -"X" ON CURB @ P.I. OF W. ENTRANCE TO CAR DEALERSHIP. 157.12' RT. ℄ 240 I-240 STA. 402+17.71 EL=1276.79
BM#22 -"X" ON HEADWALL DRAINAGE STRUCTURE 271.68' RT. ℄ 240 I-240 STA. 408+36.59 EL=1275.45

1280 1275 1270 1265 1260 1255 1250 1245 1240 1235

A-9 (EXISTING) EXIST. 6' M.H. TR=1266.36

A-10 (EXISTING) STA. 25+76.00 LINE "A" EXIST. 5' M.H. TR=1266.83

STA. 25+90.00 LINE "A" CONNECT PROP 24" SAN. SEWER TO EXIST. 24" SAN. SEWER

A-11 STA. 28+27.00 LINE "A" CONST. PROP. 5' M.H. TR= 1266.14

A-12 STA. 29+29.00 LINE "A" CONST. PROP. 5' M.H. TR= 1268.06

A-13 STA. 30+20.10 LINE "A" CONST. PROP. 5' M.H. TR= 1269.44

A-13B STA. 30+84.60 LINE "A" CONST. PROP. 5' M.H. TR= 1270.00

A-14 STA. 91+77.85. 486.15' LT.~ CL SW SERV RD.= STA. 30+98.00 LINE "A" CONST. PROP. 5' M.H. TR= 1270.04

PROP. ROADWAY CONST.

EXIST. GROUND @ SAN. SEWER

EXIST. GROUND @ SAN. SEWER

GAS

WATER

EX. 8" SAN. SEWER

EX. 12" W.L.

EX. GAS

DBL. 8'x4' RCB

+99

+24

+06'

+26'

(SEE SHEET 5)

122 L.F. OF 24" PVC PIPE @ 0.35%

237 L.F. OF 24" PVC PIPE @ 0.50%

25 L.F. OF BORE FOR 24" SANITARY SEWER w/STEEL CASING @ 0.50%

102 L.F. OF 24" PVC PIPE @ 0.50%

91 L.F. OF 24" PVC PIPE @ 0.50%

120 L.F. OF STEEL CASING FOR 24" SANITARY SEWER BY TRENCHING @ 0.05%

14 L.F. OF 24" PVC PIPE @ 0.50%

65 L.F. OF 24" PVC PIPE @ 0.50%

14 L.F. OF 24" PVC PIPE @ 0.35% (EXISTING)

(EXISTING) (BY OTHERS)

FL OUT N= 1252.73
FL SE= 1252.80
FL SW= 1261.60
FL S= 1253.39
FL NE= 1261.57

FL NW=1253.37
FL S=1261.00
FL N=1260.96
FL E=1253.40

FL= 1253.40

FL= 1254.56

FL= 1255.06

FL= 1255.51
FL= 1255.71

FL= 1256.04
FL= 1256.23

24 25+00 26 27 28 29 30+00 31 32

24" SANITARY SEWER LINE "A"

STATE JOB NO. 09032(17) SHEET NO. SS04

9/9/2016 9:25:23 AM
G:\PROJECTS\203033 OKC WC-0816 & SC-0911 & SC-0959 & SC-0976\Utilities\Sewer\CADDRAWINGS\PHASE 1A-SC0976\CADDRAWINGS\SANSEWER_LN_A_PNP03.dwg

REVISIONS	
DESCRIPTION	DATE

NOTE:
*TOP OF RIM TO MATCH EXISTING TOP OF PAVEMENT

S.E. 72nd ST.

I-240

A-14
A-13B
A-13
A-12
A-11

544 L.F. OF 24" PVC PIPE

410 L.F. OF BORE FOR 24" SANITARY SEWER w/STEEL CASING

PROP. 12" W.L.

10+00

R/W

A-15
STA. 36+42.34 LINE "A"
CONST. PROP. 5' M.H.
TR= 1274.45

185 L.F. OF 24" PVC PIPE

A-16
STA. 38+23.25 LINE "A"
CONST. PROP. 5' M.H.
TR= 1273.10

5.00'

20'

REMOVE AND REPLACE PARKING LOT PAVEMENT (CONCRETE) 1110 S.Y.

314 L.F. OF 24" PVC PIPE

8.00'

A-17
STA. 90+62.56, 550.87' RT.~
CL SW SERV. RD=
STA. 41+41.50 LINE "A"
CONST. PROP. 5' M.H.
TR= 1274.00

50 0 50 100
SCALE: 1"=50'

BM#8 - "X" ON CURB @ 521 S.E. 72ND STREET 317.43' LT. ℄ I-240
I-240 STA. 406+48.06 EL=1267.15

BM#21 -"X" ON CURB @ P.I. OF W. ENTRANCE TO CAR DEALERSHIP.
157.12' RT. ℄ 240
I-240 STA. 402+17.71 EL=1276.79

BM#22 -"X" ON HEADWALL DRAINAGE STRUCTURE 271.68' RT. ℄ 240
I-240 STA. 408+36.59 EL=1275.45

A-13B STA. 30+84.60 LINE "A"
A-14 STA. 30+98.00 LINE "A"
A-15 STA. 36+42.34 LINE "A" CONST. PROP. 5' M.H. TR= 1274.45
A-16 STA. 38+23.25 LINE "A" CONST. PROP. 5' M.H. TR= 1273.10
A-17 STA. 90+62.56, 550.87' RT.~ CL SW SERV. RD= STA. 41+41.50 LINE "A" CONST. PROP. 5' M.H. TR= 1274.00

PROP. ROADWAY CONST.

EXIST. GROUND @ SAN. SEWER

GAS
WATER
EX. 8" SAN. SEWER

GAS
WATER
PR. STM.
PR 12" W.L.

CRUSHED ROCK BACKFILL (INCIDENTAL)

+06'
+26'
+30.3

122 L.F. OF STEEL CASING FOR 24" SANITARY SEWER BY TRENCHING

544 L.F. OF 24" PVC PIPE @ 0.50%

405 L.F. OF BORE FOR 24" SANITARY SEWER w/STEEL CASING @ 0.50%

185 L.F. OF 24" PVC PIPE @ 0.35%

314 L.F. OF 24" PVC PIPE @ 0.35%

FL= 1256.04
FL= 1256.23
FL= 1258.95
FL= 1259.60
FL= 1260.70
FL= 1261.00

1285 1280 1275 1270 1265 1260 1255 1250 1245 1240

29 30+00 1 2 3 4 35+00 6 7 8 9 40 1 2 3 4

24" SANITARY SEWER LINE "A"

STATE JOB NO. 09032(17) SHEET NO. SS05

9/9/2016 9:30:37 AM
G:\PROJECTS\203033 OKC WC-0816 & SC-0911 & SC-0939 & SC-0976\Utilities\Sewer\CADDRAWINGS\PHASE 1A-SC0976\CADDRAWINGS\SANSEWER_LN_A_PRPO4.dwg

REVISIONS	
DESCRIPTION	DATE

5.00'

20.00'

A-18
STA. 45+61.50 LINE "A"
CONST. PROP. 5' M.H.
TR= 1279.47

20 L.F. OF 12" PVC
PIPE @ 4.00%

REMOVE AND REPLACE
PARKING LOT PAVEMENT
(CONCRETE) 945 S.Y.

CONNECT PROP. 12" SAN.
SEWER TO EX. SAN.
SEWER M.H.

420 L.F. OF 24" PVC
PIPE

10 L.F. OF 24" PVC
PIPE

275 L.F. OF 8" PVC
PIPE

285 L.F. OF 8" PVC
PIPE

8.00'

A-17

ABANDON 10" EX. SANITARY
SEWER

A-19
STA. 45+71.50 LINE "A"=
STA. 0+00.00 LINE "C"
CONST. PROP. 5' M.H.
TR= 1279.51

PLUG TO EAST

LINE "C"
EXISTING
(BY OTHERS)

A-20
STA. 48+46.25 LINE "A"
CONST. PROP. 5' M.H.
TR= 1281.46

REMOVE AND REPLACE
PARKING LOT PAVEMENT
(CONCRETE) 1025 S.Y.

ABANDON EX. SAN. SEWER MH

ABANDON 10" EX. SANITARY
SEWER (915 L.F.)
SEE SHEET SS08

ABANDON EX. SAN. SEWER MH

MH "A"
SEE SHEET SS08

A-21
STA. 79+00.18, 394.62' RT.~CL SW SERV RD.=
STA. 51+31.25 LINE "A"
CONST. PROP. 5' M.H.
TR= 1281.04

ABANDON EX. SAN. SEWER MH

ABANDON 10" EX. SANITARY
SEWER (600 L.F.)

BM#8 - "X" ON CURB @ 521 S.E.
72ND STREET 317.43' LT. ℄ I-240
I-240 STA. 406+48.06 EL=1267.15

BM#21 -"X" ON CURB @ P.I. OF W.
ENTRANCE TO CAR DEALERSHIP.
157.12' RT. ℄ 240
I-240 STA. 402+17.71 EL=1276.79

NOTE:
*TOP OF RIM TO MATCH
EXISTING TOP OF PAVEMENT

50 0 50 100
SCALE: 1"=50'

A-17
STA. 90+62.56, 550.87' RT.~
CL SW SERV. RD=
STA. 41+41.50 LINE "A"

A-18
STA. 45+61.50 LINE "A"
CONST. PROP. 5' M.H.
TR= 1279.47

A-19
STA. 45+71.50 LINE "A"=
STA. 0+00.00 LINE "C"
CONST. PROP. 4' M.H.
TR= 1279.51

A-20
STA. 48+46.25 LINE "A"
CONST. PROP. 4' M.H.
TR= 1281.46

A-21
STA. 51+31.25 LINE "A"
CONST. PROP. 4' M.H.
TR= 1281.04

EXIST. GROUND
@ SAN. SEWER

CRUSHED
ROCK BACKFILL
(INCIDENTAL)

CRUSHED
ROCK BACKFILL
(INCIDENTAL)

CRUSHED
ROCK BACKFILL
(INCIDENTAL)

CRUSHED
ROCK BACKFILL
(INCIDENTAL)

420 L.F. OF 24" PVC
PIPE @ 0.35%

10 L.F. OF 24" PVC
PIPE @ 0.35%

275 L.F. OF 8" PVC
PIPE @ 0.40%

285 L.F. OF 8" PVC
PIPE @ 0.40%

FL= 1260.70
FL= 1261.00

FL OUT (W) = 1262.47
FL IN (S) = 1262.71

FL OUT (W) =1262.51
FL IN (S) = 1264.69

FL= 1263.61

FL= 1265.75

1290 1285 1280 1275 1270 1265 1260 1255 1250 1245

39 40+00 41 42 43 44 45+00 46 47 48 49 50+00 51 52 53

24" SANITARY SEWER
LINE "A"

STATE JOB NO. 09032(17) SHEET NO. SS06

9/9/2016 9:32:55 AM
G:\PROJECTS\203033 OKC WC-0816 & SC-0911 & SC-0959 & SC-0976\Utilities\Sewer\CADDRAWINGS\PHASE 1A-SC0976\CADDRAWINGS\SANSEWER_LN_A_PNP05.dwg

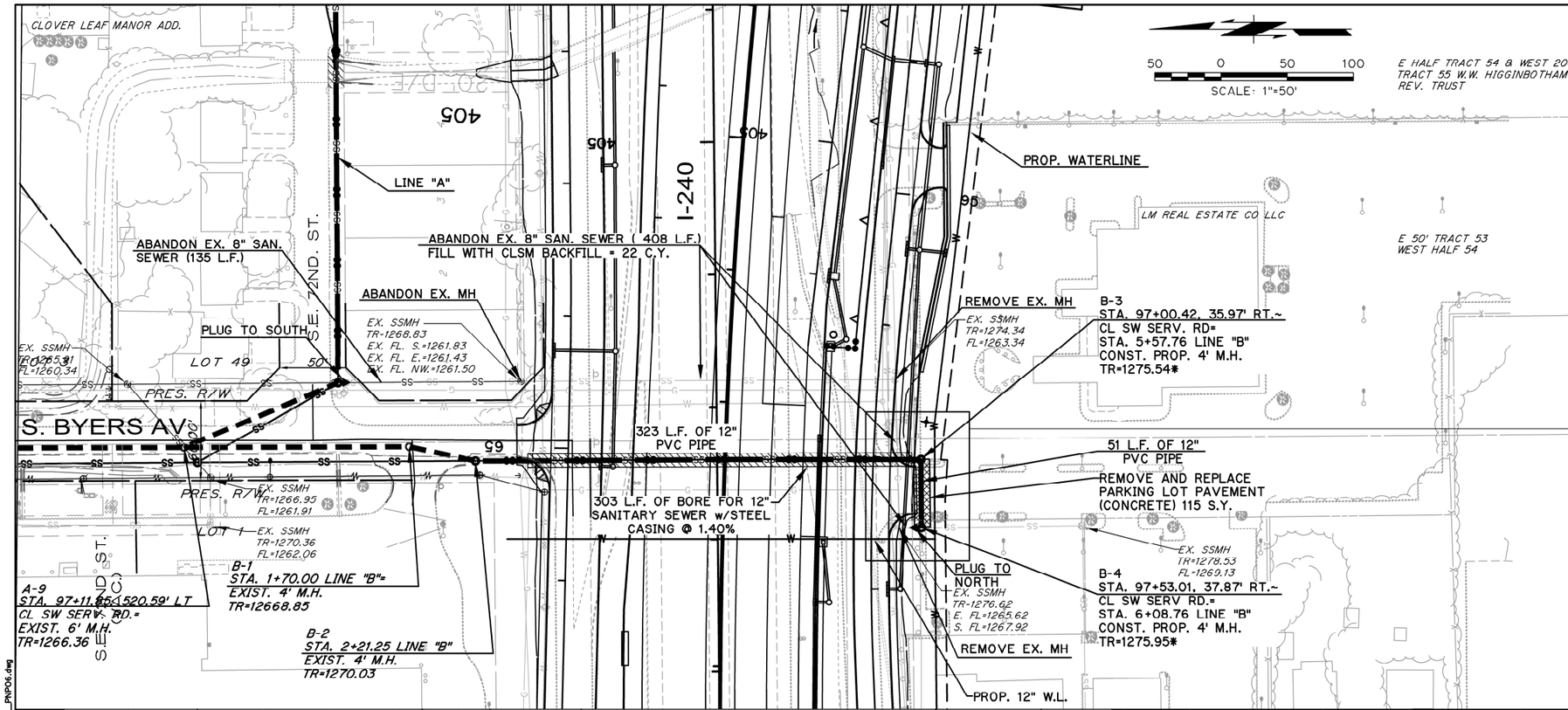

NOTE:
*TOP OF RIM TO MATCH EXISTING TOP OF PAVEMENT

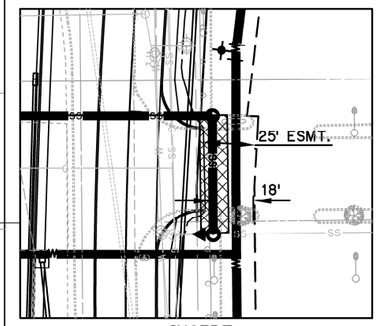

INSERT
N.T.S

BM#8 - "X" ON CURB @ 521 S.E. 72ND STREET 317.43' LT. ℄ I-240
I-240 STA. 406+48.06 EL=1267.15

BM#21 -"X" ON CURB @ P.I. OF W. ENTRANCE TO CAR DEALERSHIP. 157.12' RT. ℄ 240
I-240 STA. 402+17.71 EL=1276.79

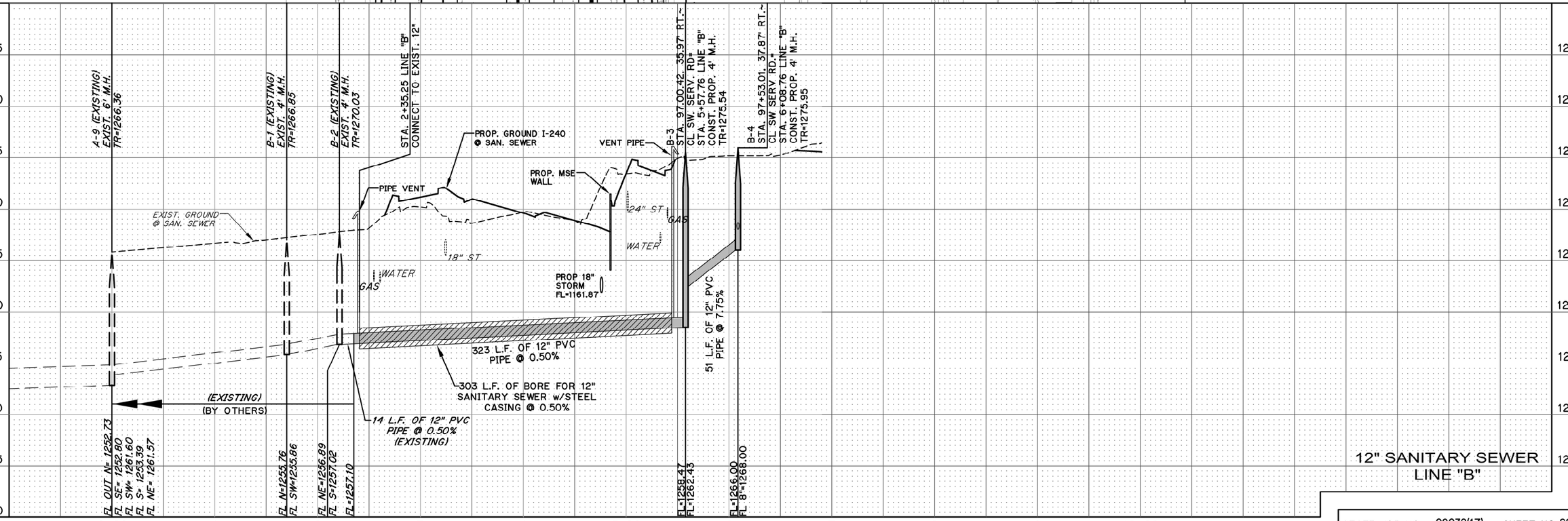

12" SANITARY SEWER LINE "B"

STATE JOB NO. 09032(17) SHEET NO. SS07

REVISIONS
DESCRIPTION DATE

9/9/2016 9:34:45 AM
G:\PROJECTS\203033 OKC WC-0816 & SC-0911 & SC-0959 & SC-0976\Utilities\Sewer\CADDRAWINGS\PHASE 1A-SC0976\CADDRAWINGS\SANSEWER_LN_B_PNP06.dwg

REVISIONS	
DESCRIPTION	DATE

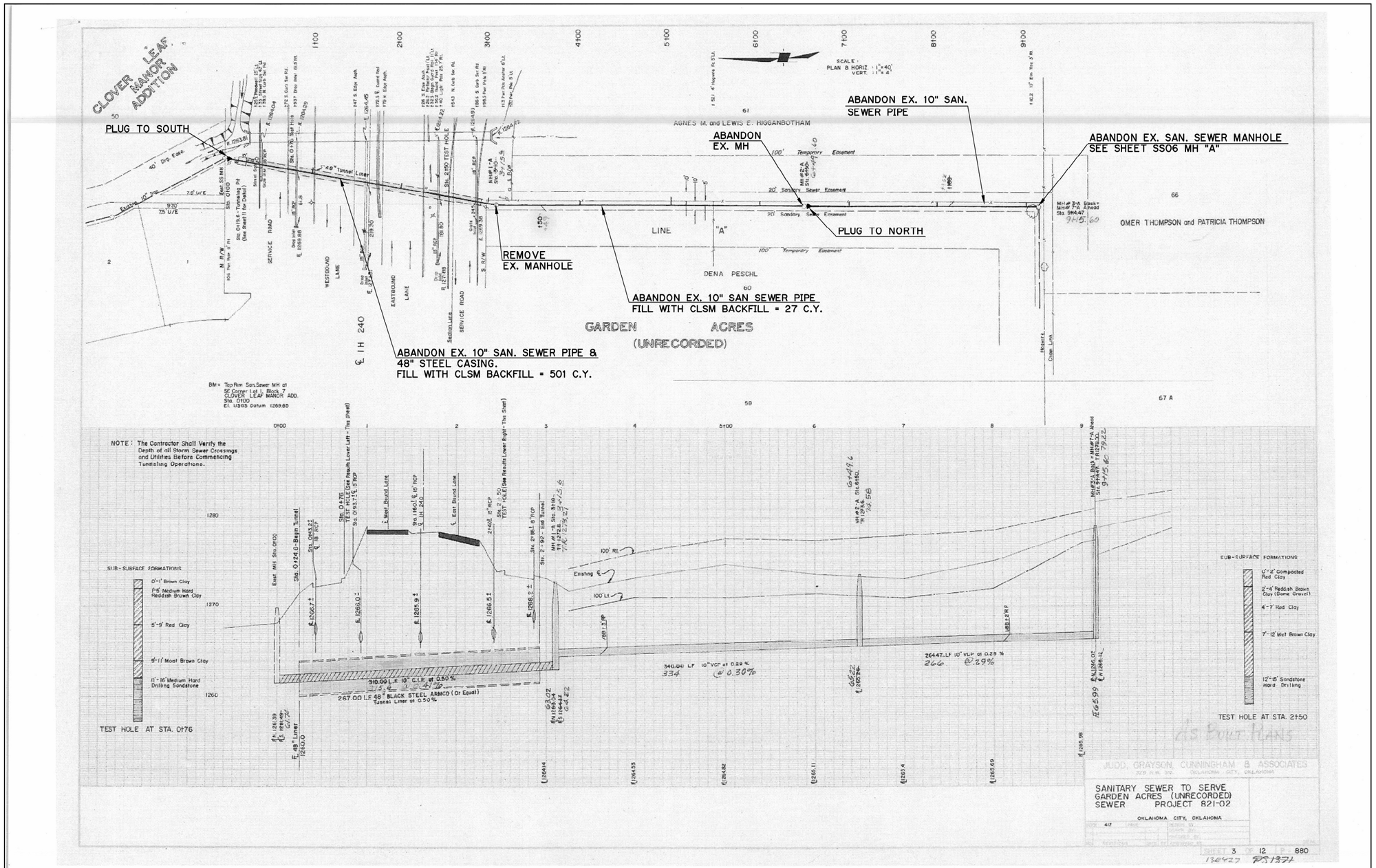

9/9/2016 9:41:20 AM
G:\PROJECTS\203033 OKC WC-0816 & SC-0911 & SC-0999 & SC-0976\Utilities\Sewer\CADDRAWINGS\PHASE 1A-SC0976\CADDRAWINGS\SANSEWER_REMOVAL_DETAIL.dwg

REMOVAL DETAIL SHEET

STATE JOB NO. 09032(17) SHEET NO. SS08

REVISIONS	
DESCRIPTION	DATE

SANITARY SEWER STANDARD DETAIL

DRAWING INDEX — ISSUE DATE:

S.01 GENERAL CONSTRUCTION NOTES - PAGE 1 OF 2 ..... 3/13/2014
S.02 GENERAL CONSTRUCTION NOTES - PAGE 2 OF 2 ..... 3/13/2014
S.03 REINFORCED CONCRETE PIPE MINIMUM DESIGN 3/13/2014
S.04 VITRIFIED CLAY PIPE DESIGN 3/13/2014
S.05 MANHOLE TESTING 3/13/2014
S.06 EMBEDMENT MATERIAL & TRENCH WIDTH TABLE 3/13/2014
S.07 BACKFILLING REQUIREMENTS - PAGE 1 OF 2 ..... 3/13/2014
S.08 BACKFILLING REQUIREMENTS - PAGE 2 OF 2 ..... 3/13/2014
S.09 PIPE INSTALLATION DETAILS 3/13/2014
S.10 REBUILDING MANHOLES STANDARD DETAIL 3/13/2014
S.11 ABANDONING MANHOLES STANDARD DETAIL 3/13/2014
S.12 EMBEDMENT PLUG 3/13/2014
S.13 PRECAST REINFORCED CONCRETE MANHOLE TRANSITION SECTION 3/13/2014
S.14 REINFORCED CONCRETE PRECAST MANHOLE BASE SECTION 3/13/2014
S.15 REINFORCED CONCRETE PRECAST 4 FT DIAMETER MANHOLE CONE 3/13/2014
S.16 PRECAST MANHOLE WALL DETAIL 3/13/2014
S.17 PRECAST REINFORCED CONCRETE FLAT SLAB MANHOLE TOP 3/13/2014
S.18 CAST-IN-PLACE CONCRETE MANHOLE BASE SECTION 3/13/2014
S.19 MANHOLE PIPE CONNECTION FOR CAST IN PLACE MANHOLES 3/13/2014
S.20 MANHOLE LID / RING GENERAL NOTES 3/13/2014
S.21 REVERSIBLE MANHOLE RING 3/13/2014
S.22 VENTED MANHOLE COVER - PAGE 1 OF 2 ..... 3/13/2014
S.23 VENTED MANHOLE COVER - PAGE 2 OF 2 ..... 3/13/2014
S.24 NON-VENTED MANHOLE COVER - PAGE 1 OF 2 ..... 3/13/2014
S.25 NON-VENTED MANHOLE COVER - PAGE 2 OF 2 ..... 3/13/2014
S.26 SERVICE CONNECTION INSTALLATION 3/13/2014
S.27 SERVICE CONNECTION TYPES 3/13/2014
S.28 BORE AND ENCASEMENT DETAIL - PAGE 1 OF 2 ..... 3/13/2014
S.29 BORE AND ENCASEMENT DETAIL - PAGE 2 OF 2 ..... 3/13/2014
S.30 CONCRETE COLLAR WITH SPREAD FOOTING - PAGE 1 OF 2 ..... 3/13/2014
S.31 CONCRETE COLLAR WITH SPREAD FOOTING - PAGE 2 OF 2 ..... 3/13/2014
S.32 TYPE I PIER - TYPE 1 OF 2 ..... 3/13/2014
S.33 TYPE I PIER - TYPE 2 OF 2 ..... 3/13/2014
S.34 TYPE II PIER 3/13/2014
S.35 STEEL CARRIER PIPE SIZES MAXIMUM SPAN LENGTH 3/13/2014

SANITARY SEWER DETAILS INDEX OF DRAWINGS

DATE	APPROVED BY:	DATE:	APPROVED BY:	DATE:	
03/13/14	ERIC J. WEINGER, P.E., CITY ENGINEER		MARSHA W. SLAUGHTER, P.E., UTILITIES DIRECTOR	3/14/14	S-00

OKLAHOMA CITY UTILITIES DEPARTMENT

SANITARY SEWER STANDARD DETAIL

1. ALL CONSTRUCTION SHALL BE IN ACCORDANCE WITH THE CITY OF OKLAHOMA CITY STANDARD SPECIFICATIONS FOR CONSTRUCTION OF PUBLIC IMPROVEMENTS.
2. ALL WORK NOT CLASSIFIED AS A CONTRACT PAY ITEM SHALL BE CONSIDERED AS AN INCIDENTAL AND NOT PAID FOR DIRECTLY.
3. ALL EXCAVATION UNDER EXISTING PAVEMENT SHALL BE BACKFILLED WITH CRUSHER RUN ROCK. ALL EXCAVATION UNDER FUTURE PAVEMENT SHALL BE BACKFILLED WITH SAND.
4. PIPE LEAKAGE TESTS SHALL BE PERFORMED BY THE CONTRACTOR IN ACCORDANCE WITH THE OKLAHOMA CITY SEWER REQUIREMENTS. LEAKAGE SHALL NOT EXCEED 50 GALLONS PER INCH OF NORMAL PIPE PER MILE PER DAY FOR ANY SECTION OF THE SYSTEM.
5. DEFLECTION TESTS SHALL BE PERFORMED ON ALL FLEXIBLE PIPE. THE TEST SHALL BE CONDUCTED AFTER THE FINAL BACKFILL HAS BEEN IN PLACE FOR AT LEAST THIRTY (30) DAYS. NO PIPE SHALL EXCEED A DEFLECTION OF MORE THAN FIVE (5%) PERCENT. IF THE DEFLECTION TEST IS TO BE RUN USING A RIGID BALL AND MANDREL, IT SHALL HAVE A DIAMETER EQUAL TO NINETY-FIVE (95%) PERCENT OF THE INSIDE DIAMETER OF THE PIPE. THE TEST SHALL BE PERFORMED WITHOUT MECHANICAL PULLING DEVICES.
6. POLYVINYL CHLORIDE (PVC) PIPES SHALL CONFORM TO ASTM F 794 FOR OPEN PROFILE PIPE AND ASTM F-1803 FOR CLOSED PROFILE PIPE. REGARDLESS OF SIZE, OPEN PROFILE WALL PIPE WILL BE ALLOWED ONLY ON SECTIONS OF PIPE WHERE THERE ARE NO APPARENT SERVICE CONNECTIONS.
7. SPECIAL SANITARY SEWER PIPE SHALL BE REQUIRED TO SATISFY MINIMUM HORIZONTAL AND VERTICAL CLEARANCE REQUIREMENTS FROM WATERLINES, WELLS AND PETROLEUM STORAGE TANKS, AS ESTABLISHED BY THE OKLAHOMA STATE DEPARTMENT OF ENVIRONMENTAL QUALITY (ODEQ).
8. SPECIAL PVC PIPE SHALL CONFORM TO ASTM D-2241 AND SDR 32.5 FOR SIZES FOUR (4") INCHES TO THIRTY-SIX (36") INCHES, OR AWWA C-900 AND AWWA C-905; WITH A MINIMUM DR RATING OF DR18 FOR PIPE SIZES FOUR (4") INCHES TO TWELVE (12") INCHES AND A MINIMUM DR RATING OF DR32.5 FOR PIPE SIZES GREATER THAN TWELVE (12") INCHES.
9. DUCTILE IRON PIPE (DIP) SHALL CONFORM TO THE REQUIREMENTS OF AWWA C-151.
   - 9.1. EXTERIOR COATING -- THE EXTERIOR SURFACES OF DUCTILE IRON PIPE, SPECIFICATIONS AND FITTINGS SHALL BE COATED WITH AN ASPHALTIC COATING IN ACCORDANCE WITH ASTM A746, SECTION 6.1; OF AWWA E-151. THE COATING SHALL HAVE A MINIMUM THICKNESS OF ONE (1) MIL.
   - 9.2. INTERIOR COATING -- INTERIOR SURFACES OF PIPE AND FITTINGS SHALL BE LINED WITH FORTY (40) MILLS OF VIRGIN POLYETHYLENE COMPLYING WITH ASTM D-1248 OR MADISON POLYETHYLENE LINING, CORPORATE II TX-5 MINUTE NUMBER 17115, MANUFACTURED BY MADISON CHEMICALS, INC., CANADA, OR APPROVED EQUAL. THE LINING MATERIALS SHALL BE COMPOUNDED WITH A MINIMUM OF TWO (2%) PERCENT CARBON BLACK TO RESIST ULTRA VIOLATE RAYS.
   - 9.3. THICKNESS -- UNLESS OTHERWISE SPECIFIED, DUCTILE IRON PIPE SHALL MEET THE REQUIREMENTS IN THE FOLLOWING TABLE AS SHOWN IN DETAIL S-02.

GENERAL CONSTRUCTION NOTES — 1 of 2

DATE	APPROVED BY:	DATE:	APPROVED BY:	DATE:	
03/13/14	ERIC J. WEINGER, P.E., CITY ENGINEER		MARSHA W. SLAUGHTER, P.E., UTILITIES DIRECTOR	3/14/14	S-01

OKLAHOMA CITY UTILITIES DEPARTMENT

SANITARY SEWER STANDARD DETAIL

DIP PIPE THICKNESS REQUIRMENTS

Pipe Nominal Thickness (inches)	DEPTH of COVER (feet) ≤10'			>10' or ≤16'			>16' or ≤20'			>20' or ≤26'		
	Nominal Thickness (inches)	Standard Pressure Class (PSI) C-151		Nominal Thickness (inches)	Standard Pressure Class (PSI) C-151		Nominal Thickness (inches)	Standard Pressure Class (PSI) C-151		Nominal Thickness (inches)	Standard Pressure Class (PSI) C-151	
3	0.25	350		0.25	350		0.25	350		0.25	350	
4	0.25	350		0.25	350		0.25	350		0.25	350	
6	0.25	350		0.25	350		0.25	350		0.25	350	
8	0.25	350		0.25	350		0.25	350		0.25	350	
10	0.26	350		0.26	350		0.26	350		0.26	350	
12	0.28	350		0.28	350		0.28	350		0.28	350	
14	0.31	250		0.31	250		0.31	250		0.31	250	
16	0.33	150		0.34	150		0.34	150		0.34	150	
20	0.38	150		0.38	150		0.38	150		0.38	150	
24	0.41	150		0.41	150		0.41	150		0.42	150	
30	0.46	150		0.46	150		0.46	150		0.47	150	
36	0.51	150		0.51	150		0.51	150		0.52	150	
42	0.56	150		0.56	150		0.56	150		0.64	150	
48										0.71	150	
54										0.78	150	
60										0.86	150	

GENERAL CONSTRUCTION NOTES — 2 of 2

DATE	APPROVED BY:	DATE:	APPROVED BY:	DATE:	
03/13/14	ERIC J. WEINGER, P.E., CITY ENGINEER		MARSHA W. SLAUGHTER, P.E., UTILITIES DIRECTOR	3/14/14	S-02

OKLAHOMA CITY UTILITIES DEPARTMENT

SANITARY SEWER STANDARD DETAIL

1. HIGHWAYS

MINIMUM PIPE CLASSES FOR DIAMETER TWENTY FOUR INCHES (24") TO ONE HUNDRED TWO INCHES (102") MEETING THE REQUIREMENTS OF ASTM C-76 SHALL BE AS FOLLOWS:

MAXIMUM DEPTH OF COVER (FT)	MINIMUM CLASS
10	III
15	IV
25	V

FOR MAXIMUM DEPTH OF COVER THIRTY FEET (30') PIPES RANGING FROM TWENTY FOUR INCHES (24") TO FIFTY FOUR INCHES (54") IN DIAMETER SHALL BE DESIGNED AND MANUFACTURED IN ACCORDANCE WITH ASTM C-655 AND SHALL HAVE THE FOLLOWING MINIMUM THREE-EDGE BEARING STRENGTH FOR 0.01 INCH CRACK (D0.01) IN POUNDS PER LINEAL FOOT PER FOOT OF INSIDE DIAMETER.

PIPE NOMINAL SIZE (INCHES)	$D_{0.01}$ (LB/LINEAL FT./FT. OF INSIDE Ø)
24	3200
27	3050
30	3050
33	3475
36	3475
42	3450
48	3300
54	3125

PIPES RANGING IN DIA. FROM SIXTY INCHES (60") TO ONE HUNDRED TWO INCHES (102") SHALL BE CLASS V FOR A MINIMUM DEPTH OF COVER OF THIRTY FEET (30') WHEN MANUFACTURED IN ACCORDANCE WITH ASTM C-76.

2. RAILROADS

MINIMUM PIPE CLASSES FOR E-80 RAILROAD LIVE LOAD FOR PIPE SIZE TWENTY FOUR INCHES (24") TO ONE HUNDRED TWO INCHES (102") IN DIA. MEETING THE REQUIREMENTS OF ASTM C-76, OR ASTM C-655 SHALL BE AS FOLLOWS:

A. MAXIMUM DEPTH OF COVER TEN FEET (10')-- DIA. TWENTY FOUR INCHES (24") TO ONE HUNDRED TWO INCHES (102") SHALL BE CLASS VI.

B. MAXIMUM DEPTH OF COVER FIFTEEN FEET (15') DIA. TWENTY FOUR INCHES (24") TO FORTY TWO INCHES (42") SHALL BE CLASS V AND DIA. FORTY EIGHT INCHES (48") TO ONE HUNDRED TWO INCHES (102") SHALL BE CLASS VI.

C. MAXIMUM DEPTH OF COVER TWENTY FEET (20')-- DIA. TWENTY FOUR INCHES (24") TO ONE HUNDRED TWO INCHES (102") SHALL BE CLASS V.

D. MAXIMUM DEPTH OF COVER TWENTY FIVE FEET (25') DIA. TWENTY FOUR INCHES (24") SHALL HAVE D0.01 OF THIRTY ONE HUNDRED POUNDS/LINEAL FOOT PER FOOT OF INSIDE DIA. (3100 LB/LF). DIAMETERS TWENTY SEVEN INCHES (27") TO ONE HUNDRED TWO INCHES (102") SHALL BE CLASS V.

E. MAXIMUM DEPTH OF COVER THIRTY FEET(30') -- DIA. TWENTY FOUR INCHES (24") TO SIXTY INCHES (60") SHALL HAVE THE FOLLOWING D0.01

PIPE NOMINAL SIZE (INCHES)	$D_{0.01}$ (LB/LINEAL FT./FT. OF INSIDE Ø)
24	3300
27	3125
30	3150
33	3575
36	3575
42	3550
48	3400
54	3225
60	3100

DIAMETERS TWENTY FOUR INCHES (24") TO ONE HUNDRED TWO INCHES (102") SHALL BE CLASS V.

REINFORCED CONCRETE PIPE MINIMUM DESIGN

DATE	APPROVED BY:	DATE:	APPROVED BY:	DATE:	
03/13/14	ERIC J. WEINGER, P.E., CITY ENGINEER		MARSHA W. SLAUGHTER, P.E., UTILITIES DIRECTOR	3/14/14	S-03

OKLAHOMA CITY UTILITIES DEPARTMENT

SANITARY SEWER STANDARD DETAIL

VITRIFIED CLAY PIPE (VCP)
MINIMUM PIPE DESIGN
ASTM C-700

PIPE NOMINAL SIZE (INCHES)	MINIMUM THREE-EDGE BEARING STRENGTH (LB/FT)	MAXIMUM DEPTH OF COVER (FT)
4	2000	25
6	2000	25
8	2200	20
10	2400	18
12	2600	16
15	2900	15
18	3300	14
21	3850	14
24	4400	14
27	4700	13
30	5000	13
33	5500	13
36	6000	13
39	6500	13
42	7000	12

VITRIFIED CLAY PIPE DESIGN

DATE	APPROVED BY:	DATE:	APPROVED BY:	DATE:	
03/13/14	ERIC J. WEINGER, P.E., CITY ENGINEER		MARSHA W. SLAUGHTER, P.E., UTILITIES DIRECTOR	3/14/14	S-04

OKLAHOMA CITY UTILITIES DEPARTMENT

SANITARY SEWER STANDARD DETAIL

1. GENERAL -- WHEN CALLED FOR ON THE PLANS OR SPECIFIED, MANHOLES SHALL BE TESTED, BEFORE ACCEPTANCE, BY EITHER PERFORMING EXFILTRATION OR VACUUM TEST. THE ENGINEER SHALL DETERMINE WHICH TEST SHALL BE PERFORMED.
2. EXFILTRATION TEST -- ALL INCOMING AND OUTGOING LINES (INCLUDING SERVICES) SHALL BE PLUGGED AND THE MANHOLE FILLED WITH WATER UP TO THE BOTTOM OF THE MANHOLE RING. IF THE WATER LOSS EXCEEDS THE MAXIMUM ALLOWABLE AS SHOWN, THE MANHOLE SHALL BE CONSIDERED TO HAVE FAILED THE TEST. THE CONTRACTOR SHALL DRAIN, PERFORM THE NECESSARY REPAIRS AS DIRECTED BY THE ENGINEER, AND THEN RESET THE MANHOLE UNTIL IT PASSES, ALL AT NO ADDITIONAL COST TO THE CITY.

Manhole Depth (feet)	Maximum Allowable Water Loss
≤ 8	One (1") Inch over Five (5) minutes
≥ 8	One - Eighth (1/8") inch per vertical foot of depth over five (5) minutes

3. VACUUM TESTING -- ALL INCOMING AND OUTGOING SEWER AND SERVICE LINES SHALL BE PLUGGED. THE PLUGS RESTRAINED AND THE VACUUM TESTER HEAD PLACED ON THE MANHOLE RING AND SEALED. A VACUUM OF TEN (10") INCHES Hg (MERCURY) SHALL THEN BE DRAWN ON THE MANHOLE AND THE TIME MEASURES FOR THE VACUUM TO DROP TO NINE (9") INCHES Hg. THE TIME MEASURED SHALL BE NOT LESS THAN THAT SHOWN ON THE FOLLOWING TABLE.

Manhole Internal Diameter (feet)	Time Measured (seconds)
4	60
5	60
6	60
7	70

MANHOLE TESTING

DATE	APPROVED BY:	DATE:	APPROVED BY:	DATE:	
03/13/14	ERIC J. WEINGER, P.E., CITY ENGINEER		MARSHA W. SLAUGHTER, P.E., UTILITIES DIRECTOR	3/14/14	S-05

OKLAHOMA CITY UTILITIES DEPARTMENT

SANITARY SEWER STANDARD DETAIL

TRENCH WIDTH TABLE

PIPE NOMINAL SIZE (IN.)	MIN. TRENCH WIDTH (FT.)	MAX TRENCH WIDTH (FT.)
≤ 12	5.00	5.00
15	5.25	5.00
18	3.50	5.00
21	3.75	5.25
24	4.00	6.00
27	4.25	6.25
30	4.50	6.75
33	4.75	8.25
36	5.25	9.00
42	6.25	9.50
48	7.00	11.00
54	8.00	11.50
60	9.00	12.00
66	9.75	13.00
72	10.50	13.00
78	10.50	13.50
84	11.00	14.00
90	11.50	14.50
96	12.00	15.00
102	12.50	15.00

PIPE ENCASEMENT AND COLLAR DETAIL

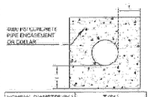

NOMINAL DIAMETER (IN.)	"T" (IN.)
≤ 18"	6"
> 18" & ≤ 30"	8"
> 30" & ≤ 42"	10"
> 42"	12"

NOTE: For Collars the concrete encasement shall be placed to a minimum of twelve (12") inches on either side of the joint.

EMBEDMENT MATERIAL

EMBEDMENT MATERIAL IS THE MATERIAL TO BE PLACED FROM A MINIMUM OF SIX-INCHES (6") BELOW THE BOTTOM OF THE PIPE TO THE SPRINGLINE OF THE PIPE (THE PIPE DIAMETER) OR TO A MINIMUM OF SIX-INCHES (6") ABOVE THE TOP OF THE PIPE FOR RIGID AND FLEXIBLE PIPES, RESPECTIVELY. THE REMAINING TO BE PLACED OVER THE EMBEDMENT MATERIAL WILL BE CONSIDERED BACKFILL.

MINIMUM MATERIAL REQUIREMENTS

1. GENERAL

EMBEDMENT MATERIAL FOR ALL RIGID AND FLEXIBLE PIPES SHALL BE CRUSHED ROCK MEETING THE REQUIREMENTS EITHER OF ASTM D-2321, CLASS 1A, OR ASTM C-33, NO. 57 OR 67 IN GRADATIONS SHOWN BELOW.

NOMINAL SIEVE REQUIREMENT	PERCENT PASSING		
	ASTM D-2321 CLASS 1A	ASTM C-33	
		NO.57	NO.67
1½ IN.	100%	100%	-
1 INCH	-	95 TO 100%	100%
¾ INCH	-	-	90 TO 100%
⅜ INCH	-	25 TO 60%	-
⅛ INCH	-	-	20 TO 55%
NO. 4	≤ 10%	0 TO 10%	0 TO 10%
NO. 8	-	0 TO 5%	0 TO 5%
NO. 200	≤ 5%	-	-

2. COMPACTION REQUIREMENTS

ALL EMBEDMENT MATERIAL SHALL BE PLACED AND COMPACTED IN SIX INCH (6") LIFTS TO THE FOLLOWING MINIMUM PERCENT OF STANDARD PROCTOR DENSITY AS DETERMINED BY ASTM D-698, "TESTS FOR MOISTURE-DENSITY RELATIONS OF SOILS AGGREGATE MIXTURES" AND ASTM D-2049, "TEST FOR RELATED DENSITY OF COHESIONLESS SOILS", RESPECTIVELY.

COMPACTION TEST	COMPACTION REQUIREMENT
STANDARD PROCTOR DENSITY	95%
RELATIVE DENSITY	75%

3. COMPACTION METHODS

ALL EMBEDMENT MATERIAL SHALL BE COMPACTED IN ACCORDANCE WITH THE METHODS DESCRIBED IN PART "D" OF "BACKFILLING REQUIREMENTS"

EMBEDMENT MATERIAL & TRENCH WIDTH TABLE

DATE	APPROVED BY:	DATE:	APPROVED BY:	DATE:	
03/13/14	ERIC J. WEINGER, P.E., CITY ENGINEER		MARSHA W. SLAUGHTER, P.E., UTILITIES DIRECTOR	3/14/14	S-06

OKLAHOMA CITY UTILITIES DEPARTMENT

SANITARY SEWER STANDARD DETAIL

1. DESCRIPTION

BACKFILL IS THAT PORTION OF THE TOTAL TRENCH BACKFILL DOWN TO BUT NOT INCLUDING THE PIPE EMBEDMENT MATERIAL. THE BACKFILL SHALL BE ONLY MATERIAL APPROVED BY THE ENGINEER CONSISTING OF LOOSE EARTH FREE OF CLODS, STONES, ORGANIC MATTER, DEBRIS OR OTHER OBJECTIONABLE MATERIAL. ALL BACKFILLING SHALL BE DONE IN SUCH A MANNER AS NOT TO DISTURB OR DAMAGE THE PIPE OR STRUCTURES OVER OR AGAINST WHICH IT IS BEING PLACED. ANY PIPE OR STRUCTURE DAMAGED OR MOVED FROM ITS PROPER LINE OR GRADE DURING BACKFILLING OPERATIONS SHALL BE OPENED UP AND REPAIRED AND THEN REBACKFILLED AS HEREIN SPECIFIED.THE PLACING OF BACKFILL MATERIAL SHALL NOT BEGIN UNTIL APPROVAL FOR SO DOING HAS BEEN GIVEN BY THE ENGINEER, BUT BACKFILLING ABOUT STRUCTURES OR PORTIONS OF STRUCTURES SHALL BE DONE IMMEDIATELY WHEN SO ORDERED BY THE ENGINEER. THE TOP SURFACE OR OTHER MATERIAL IS REMOVED AND PILED SEPARATELY, SUCH MATERIAL SHALL BE CAREFULLY REPLACED IN A MANNER APPROVED BY THE ENGINEER, THE TOP TWELVE INCHES (12") OF BACKFILL MATERIAL SHALL BE OF AS GOOD OR BETTER QUALITY AS THE ORIGINAL TOP SOIL WHICH WAS REMOVED.

2. COMPACTION REQUIREMENTS

ALL BACKFILL SHALL BE PLACED AND COMPACTED IN SIX INCH (6") LIFTS OR HAND-TAMPED EQUIPMENT AND THIRTY INCH (30") LIFTS FOR SELF-PROPELLED OR POWER DRIVEN EQUIPMENT TO THE FOLLOWING MINIMUM PERCENT OF STANDARD PROCTOR DENSITY OR RELATED DENSITY AS DETERMINED BY ASTM D-698, "TESTS FOR MOISTURE-DENSITY RELATIONS OF SOILS AND SOIL AGGREGATE MIXTURES", AND ASTM D-2049, "TEST FOR RELATIVE DENSITY OF COHESIONLESS SOILS", RESPECTIVELY. ASTM D-2049 SHALL BE PERFORMED ON COHESIONLESS (GRANULAR) SOILS. COHESIVE BACKFILL MATERIAL SHALL REACH THE INDICATED COMPACTION LEVELS AT PLUS OR MINUS THREE PERCENT (3%) OF OPTIMUM MOISTURE CONTENT. THE LIFT THICKNESS SHALL BE REDUCED, IF NECESSARY, TO MEET THE COMPACTION REQUIREMENTS SPECIFIED HEREIN.

GENERAL LOCATION	PERCENT COMPACTION	
	STANDARD PROCTOR DENSITY ASTM D-698	RELATIVE DENSITY TEST ASTM - 2049
UNDER TRAFFIC AREA OR IMPROVED EXISTING SURFACES	95	75
URBAN & RESIDENTIAL AREAS	90	70
UNDEVELOPED & OTHER AREAS	85	70

BACKFILLING REQUIREMENTS — 1 of 2

DATE	APPROVED BY:	DATE:	APPROVED BY:	DATE:	
03/13/14	ERIC J. WEINGER, P.E., CITY ENGINEER		MARSHA W. SLAUGHTER, P.E., UTILITIES DIRECTOR	3/14/14	S-07

OKLAHOMA CITY UTILITIES DEPARTMENT

The City of Oklahoma City
Utilities Department
Engineering Division

NO.	DATE	DESCRIPTION

SANITARY SEWER STANDARD DETAILS

DATE:	03/14/14
DRAWN BY:	JDS
CHECKED BY:	MWS/EJW

SCALE: AS SHOWN

SHEET NUMBER S-STD-01

STATE JOB NO. 09032(17) SHEET NO. SS09

PLOTTED: Friday, March 28, 2014
FILE PATH: Z:\STANDARD DETAILS & WATER METER SPECIFICATIONS\UPDATED STANDARD DETAILS 2014\SEWER\WORKING\SAN-SEW-STND-2014-SIGNED.DWG
9/9/2016 9:51:00 AM
G:\PROJECTS\203033 OKC WC-0816 & SC-0911 & SC-0959 & SC-0976\Utilities\Sewer\CADDRAWINGS\PHASE 1A-SC0976\CADDRAWINGS\SANSEWER_DETAIL_SHEET_1.dwg

REVISIONS	
DESCRIPTION	DATE

SANITARY SEWER STANDARD DETAIL

3. COMPACTION METHODS

COMPACTION METHODS MAY VARY DEPENDING ON THE MATERIAL OR AS APPROVED BY THE ENGINEER

A. COHESIVE MATERIALS
COMPACTION OF COHESIVE MATERIALS MAY BE OBTAINED BY USE OF IMPACT TYPE EQUIPMENT IN CONFINED AREAS, PNEUMATIC TAMPERS AND ENGINE DRIVEN RAMMERS MAY ALSO BE USED. IN RELATIVELY NARROW TRENCHES, SELF-PROPELLED RAMMERS MAY BE USED. IN WIDE TRENCHES, SHEEPSFOOT ROLLERS MAY BE USED.

B. COHESIONLESS MATERIALS
COHESIONLESS MATERIALS ARE GRANULAR MATERIALS CLASSIFIED AS NON-PLASTIC. IN GENERAL, VIBRATORY EQUIPMENT MAY BE USED FOR PROPER COMPACTION. IN CONFINED AREAS, VIBRATORY PLATES MAY BE USED. FOR WIDER TRENCHES, VIBRATORY ROLLERS MAY BE USED.

C. FLOODING OR JETTING
WHEN APPROVED BY THE ENGINEER, MATERIALS MAY ALSO BE COMPACTED OR SETTLED BY FLOODING WHERE ADEQUATE QUANTITIES OF WATER ARE AVAILABLE FROM THE CITY'S WATER SYSTEM, PRIVATELY OWNED PONDS, CREEKS OR OTHER SOURCES LOCATED WITHIN THREE HUNDRED FEET (300') OF THE TRENCH. WATER SHALL BE USED TO PRODUCE A SEMI-FLUID MASS ALONG AND OUT OF THE TRENCH AT STREAM CROSSINGS OR OTHER PLACES OF ABRUPT CHANGES IN GROUND PROFILE. THE CONTRACTOR SHALL MAKE NECESSARY ARRANGEMENTS WITH THE CITY FOR THE PURCHASE OF WATER FROM THE CITY WATER MAINS, AND WITH OWNERS OF WATER PROCURED FROM PRIVATELY OWNED WATER SOURCES. NO ADDITIONAL COMPENSATION SHALL BE ALLOWED TO THE CONTRACTOR FOR SETTLING THE BACKFILL BY JETTING. THE COST OF SUCH WORK SHALL BE INCLUDED IN THE UNIT PRICE BID FOR TRENCH EXCAVATION AND BACKFILL OR OTHER PAY ITEMS THE CONTRACTOR MAY ELECT.

4. COMPACTION REQUIREMENTS

ALL BACKFILL SHALL BE TESTED BY AN APPROVED LABORATORY FOR COMPLIANCE OF THE COMPACTION REQUIREMENTS.

5. SURFACE RESTORATION

UPON COMPLETION OF BACKFILLING PROCEDURES, THE CONTRACTOR SHALL REPLACE ALL SURFACE MATERIALS AND SHALL RESTORE PAVING, CURBING, SIDEWALKS, GUTTERS, SHRUBBERY, FENCES, SOD AND OTHER SURFACES DISTURBED TO A CONDITION EQUAL TO OR BETTER THAN THE CONDITION BEFORE WORK BEGAN.

BACKFILLING REQUIREMENTS 2 of 2

DATE	APPROVED BY: ERIC J. WENGER, P.E., CITY ENGINEER DATE:	APPROVED BY: MARSHA W. SLAUGHTER, P.E., UTILITIES DIRECTOR DATE: 3/14/14	S-08
03/13/14			

OKLAHOMA CITY UTILITIES DEPARTMENT

SANITARY SEWER STANDARD DETAIL

FLEXIBLE PIPE INSTALLATION DETAIL
(DIP, HDPE, PVC & RFP)

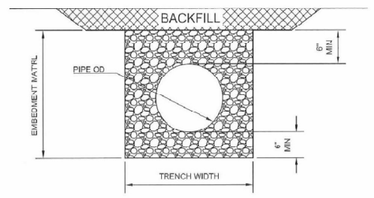

RIGID PIPE INSTALLATION DETAIL
(RCP & VCP)

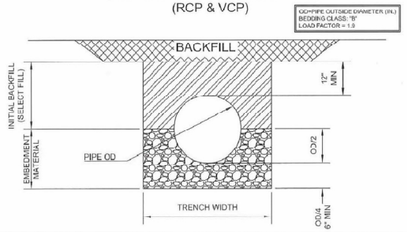

PIPE INSTALLATION DETAILS

DATE	APPROVED BY: ERIC J. WENGER, P.E., CITY ENGINEER DATE:	APPROVED BY: MARSHA W. SLAUGHTER, P.E., UTILITIES DIRECTOR DATE: 3/14/14	S-09
03/13/14			

OKLAHOMA CITY UTILITIES DEPARTMENT

SANITARY SEWER STANDARD DETAIL

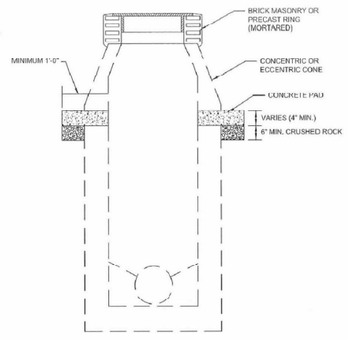

NOTES:

1. CAST-IN-PLACE NON-REINFORCED CONCRETE AND BRICK MANHOLES
1.1. THE EXISTING CONE AND WALL, IF NECESSARY, SHALL BE REMOVED TO A LEVEL WHICH WILL ALLOW INSTALLATION OF NEW CONE TO THE PROPER GRADE. THE EXPOSED CUT-OFF SURFACES OF THE EXISTING MANHOLE WALL SHALL BE CLEANED BY REMOVING LOOSE MATERIAL AND WETTED, PRIOR TO CONSTRUCTION OF CONCRETE PAD. ALL LOOSE BACKFILL AROUND THE MANHOLE WALL SHALL BE REMOVED AND REPLACED WITH COMPACTED CRUSHED ROCK. THE NEW CONCRETE PAD SHALL BE CONSTRUCTED, AND A NEW CONE SHALL BE FORMED OR PLACED TO THE PROPER GRADE USING FIFTEEN THOUSAND (1500 PSI) POUNDS PER SQUARE INCH MORTAR.

2. PRECAST REINFORCED CONCRETE MANHOLES
2.1. PRECAST SECTIONS SHALL BE REMOVED TO A LEVEL WHERE THE NEW CONE CON BE INSTALLED TO THE DESIRED GRADE. INSTALLATION SHALL BE IN ACCORDANCE WITH THE APPROPRIATE STANDARD DETAIL FOR PRECAST MANHOLE CONES. A NEW RUBBER GASKET SHALL BE USED TO SEAL EACH SECTION.

REBUILDING MANHOLES STANDARD DETAIL

DATE	APPROVED BY: ERIC J. WENGER, P.E., CITY ENGINEER DATE:	APPROVED BY: MARSHA W. SLAUGHTER, P.E., UTILITIES DIRECTOR DATE: 3/14/14	S-10
03/13/14			

OKLAHOMA CITY UTILITIES DEPARTMENT

SANITARY SEWER STANDARD DETAIL

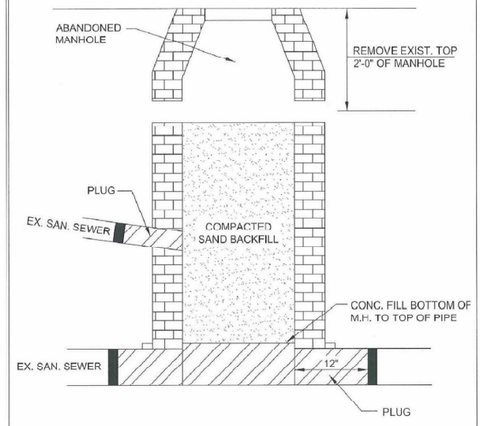

NOTE: SALVAGED MATERIALS, INCLUDING RING AND COVER SHALL BE DELIVERED TO THE LINE MAINTENANCE DIVISION OF THE WATER AND WASTEWATER UTILITIES DEPARTMENT.

ABANDONING MANHOLES STANDARD DETAIL

DATE	APPROVED BY: ERIC J. WENGER, P.E., CITY ENGINEER DATE:	APPROVED BY: MARSHA W. SLAUGHTER, P.E., UTILITIES DIRECTOR DATE: 3/14/14	S-11
03/13/14			

OKLAHOMA CITY UTILITIES DEPARTMENT

SANITARY SEWER STANDARD DETAIL

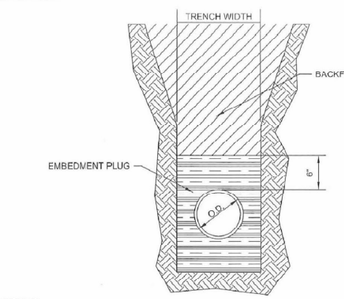

NOTES:

TWO TYPES OF EMBEDMENT PLUGS MAY BE USED, AT THE CONTRACTORS OPTION. AS FOLLOWS:

1. CLAY PLUGS
1.1. THE EMBEDMENT AND BACKFILL MATERIAL SHALL BE SELECT CLAY SEPARATED FROM EXCAVATED MATERIAL AND SHALL BE APPROVED BY THE ENGINEER PRIOR TO PLACEMENT. THIS MATERIAL SHALL BE FREE OF CLODS, CLUMPS, DEBRIS, ORGANIC MATERIAL AND STONES. ALL CLAY PLUG MATERIAL SHALL BE COMPACTED TO A MINIMUM OF NINETY (90%) PERCENT OF STANDARD PROCTOR DENSITY (ASTM D-698) AT PLUS OR MINUS THREE (3%) PERCENT OF OPTIMUM MOISTURE CONTENT.

2. FLOWABLE FILL PLUGS
2.1. FLOWABLE FILL PLUGS SHALL CONSIST OF A PORTLAND CEMENT GROUT HAVING A MINIMUM TWENTY-EIGHT (28) DAY COMPRESSIVE STRENGTH OF FIVE HUNDRED (500 PSI) POUNDS PER SQUARE INCH.

EMBEDMENT PLUG

DATE	APPROVED BY: ERIC J. WENGER, P.E., CITY ENGINEER DATE:	APPROVED BY: MARSHA W. SLAUGHTER, P.E., UTILITIES DIRECTOR DATE: 3/14/14	S-12
03/13/14			

OKLAHOMA CITY UTILITIES DEPARTMENT

SANITARY SEWER STANDARD DETAIL

1. MANHOLES SHALL BE CONSTRUCTED AS SPECIFIED IN ASTM C-478.
2. THE MINIMUM WALL THICKNESS IS SPECIFIED IN THE FOLLOWING TABLE AND SHALL NOT BE LESS THAN ONE-TWELTH (1/12) OF THE INTERNAL DIAMETER OF THE LARGEST CONE OR RISER OR FIVE-INCHES (5") WHICHEVER IS GREATER.

MANHOLE INTERNAL DIAMETER (FEET)	MINIMUM WALL THICKNESS (INCHES)
4	5
5	5
6	6
7	7
8	8

3. MINIMUM DEPTH OF MANHOLE TO BE 6'-0".
4. ALL LIFTING HOLES PROVIDED IN EACH SECTION SHALL BE REPAIRED WITH A MIXTURE OF CEMENT & SAND GROUT FIRMLY PACKED INTO ENTIRE ORIFICE.
5. ALL INSIDES SURFACES OF PRECAST MANHOLES SHALL BE COATED WITH A DRY FILM THICKNESS OF NOT LESS THAN EIGHT (8) MILS OF TNEMEC SERIES 69 HI-BUILD EPOXOLINE II, OR APPROVED EQUAL.
6. WHEN DIRECTED BY THE ENGINEER, A SET OF THREE (3) CYLINDERS, THREE-INCHES (3") IN DIAMETER SHALL BE CUT FROM RANDOMLY SELECTED MANHOLES AND TESTED FOR COMPRESSIVE STRENGTH.
7. ACCEPTANCE OF THE MANHOLE STRUCTURE SHALL BE BASED ON THE CONFORMANCE AND PERFORMANCE OF MATERIALS REQUIRED IN ASTM C-478 AND THE ENGINEER'S INSPECTION OF THE INSTALLED PRODUCT.

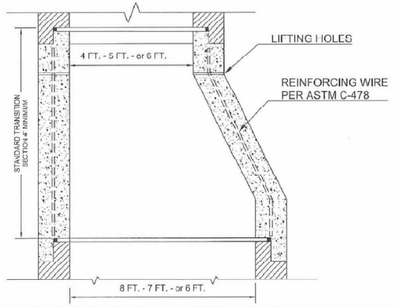

PRECAST REINFORCED CONCRETE MANHOLE TRANSITION SECTION

DATE	APPROVED BY: ERIC J. WENGER, P.E., CITY ENGINEER DATE:	APPROVED BY: MARSHA W. SLAUGHTER, P.E., UTILITIES DIRECTOR DATE: 3/14/14	S-13
03/13/14			

OKLAHOMA CITY UTILITIES DEPARTMENT

SANITARY SEWER STANDARD DETAIL

NOTE:

1. ALL CONCRETE FOR MANHOLE STRUCTURE AND BASE SHALL HAVE A MINIMUM COMPRESSIVE STRENGTH OF 4000 PSI
2. PRECAST MANHOLES SHALL BE CONSTRUCTED AS PER ASTM C-478
3. ALL INSIDE SURFACES OF PRECAST MANHOLES SHALL BE COATED WITH A DRY FILM THICKNESS OF NOT LESS THAN EIGHT (8) MILS OF TNEMEC SERIES 69 HI-BUILD EPOXOLINE II, OR APPROVED EQUAL.
4. MINIMUM DEPTH OF MANHOLE TO BE 6'-0".

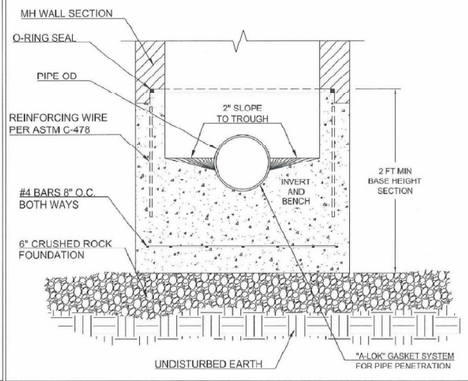

REINFORCED CONCRETE PRECAST MANHOLE BASE SECTION

DATE	APPROVED BY: ERIC J. WENGER, P.E., CITY ENGINEER DATE:	APPROVED BY: MARSHA W. SLAUGHTER, P.E., UTILITIES DIRECTOR DATE: 3/14/14	S-14
03/13/14			

OKLAHOMA CITY UTILITIES DEPARTMENT

SANITARY SEWER STANDARD DETAIL

1. MANHOLES SHALL BE CONSTRUCTED AS SPECIFIED IN ASTM C-478

2. THE MINIMUM WALL THICKNESS IS SPECIFIED IN THE FOLLOWING TABLE AND SHALL NOT BE LESS THAN ONE-TWELTH (1/12) OF THE INTERNAL DIAMETER OF THE LARGEST CONE OR RISER OF FIVE-INCHES (5") WHICHEVER IS GREATER.

MANHOLE INTERNAL DIAMETER (FEET)	MINIMUM WALL THICKNESS (INCHES)
4	5
5	5
6	6
7	7
8	8

3. MINIMUM DEPTH OF MANHOLE TO BE 6' 0".

4. ALL LIFTING HOLES PROVIDED IN EACH SECTION SHALL BE REPAIRED WITH A MIXTURE OF CEMENT & SAND GROUT FIRMLY PACKED INTO ENTIRE ORIFICE.

5. ALL INSIDE SURFACES OF PRECAST MANHOLES SHALL BE COATED WITH A DRY FILM THICKNESS OF NOT LESS THAN EIGHT (8) MILS OF TNEMEC SERIES 69 HI-BUILD EPOXOLINE II, OR APPROVED EQUAL

6. WHEN DIRECTED BY THE ENGINEER, A SET OF THREE (3) CYLINDERS, THREE-INCHES (3") IN DIAMETER SHALL BE CUT FROM RANDOMLY SELECTED MANHOLES AND TESTED FOR COMPRESSIVE STRENGTH.

7. ACCEPTANCE OF THE MANHOLE STRUCTURE SHALL BE BASED ON THE CONFORMANCE AND PERFORMANCE OF MATERIALS REQUIRED IN ASTM C-478 AND THE ENGINEER'S INSPECTION OF THE INSTALLED PRODUCT.

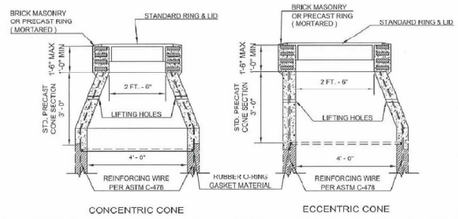

REINFORCED CONCRETE PRECAST 4 FT DIAMETER MANHOLE CONE

DATE	APPROVED BY: ERIC J. WENGER, P.E., CITY ENGINEER DATE:	APPROVED BY: MARSHA W. SLAUGHTER, P.E., UTILITIES DIRECTOR DATE: 3/14/14	S-15
03/13/14			

OKLAHOMA CITY UTILITIES DEPARTMENT

The City of Oklahoma City
Utilities Department
Engineering Division

NO.	DATE	DESCRIPTION

SANITARY SEWER STANDARD DETAILS

DATE:	03/14/14
DRAWN BY:	JDS
CHECKED BY:	MWS/EJW

SCALE: AS SHOWN

SHEET NUMBER S-STD-02

PLOTTED: Friday, March 28, 2014 3:10:47 PM
FILE PATH: Z:\STANDARD DETAILS & WATER METER SPECIFICATIONS\UPDATED STANDARD DETAILS 2014\SEWERWORKING\SAN-SEW-STNDS-2014-SIGNED.DWG

9/9/2016 1:50:09 PM
G:\PROJECTS\209033 OKC WC-0816 & SC-0911 & SC-0939 & SC-0976\Utilities\Sewer\CADDRAWINGS\PHASE 1A-SC0976\CADDRAWINGS\SANSEWER_DETAIL SHEET_2.dwg

STATE JOB NO. 09032(17) SHEET NO. SS10

REVISIONS	
DESCRIPTION	DATE

SANITARY SEWER STANDARD DETAIL

1. MANHOLES SHALL BE CONSTRUCTED AS SPECIFIED IN ASTM C-478
2. THE MINIMUM WALL THICKNESS IS SPECIFIED IN THE FOLLOWING TABLE AND SHALL NOT BE LESS THAN ONE-TWELFTH (1/12) OF THE INTERNAL DIAMETER OF THE LARGEST CONE OR RISER OR FIVE-INCHES (5") WHICHEVER IS GREATER.

MANHOLE INTERNAL DIAMETER (FEET)	MINIMUM WALL THICKNESS (INCHES)
4	5
5	5
6	6
7	7
8	8

3. ALL LIFTING HOLES PROVIDED IN EACH SECTION SHALL BE REPAIRED WITH A MIXTURE OF CEMENT AND SAND GROUT FIRMLY PACKED INTO ENTIRE ORIFICE.
4. ALL INSIDE SURFACES OF PRECAST MANHOLES SHALL BE COATED WITH A DRY FILM THICKNESS OF NOT LESS THAN EIGHT (8) MILS OF TNEMEC SERIES 69 HI-BUILD EPOXOLINE II, OR APPROVED EQUAL.
5. WHEN DIRECTED BY THE ENGINEER, A SET OF THREE (3) CYLINDERS, THREE-INCHES (3") IN DIAMETER SHALL BE CUT FROM RANDOMLY SELECTED MANHOLES AND TESTED FOR COMPRESSIVE STRENGTH.
6. ACCEPTANCE OF THE MANHOLE STRUCTURE SHALL BE BASED ON THE CONFORMANCE AND PERFORMANCE OF MATERIALS REQUIRED IN ASTM C-478 AND THE ENGINEER'S INSPECTION OF THE INSTALLED PRODUCT.

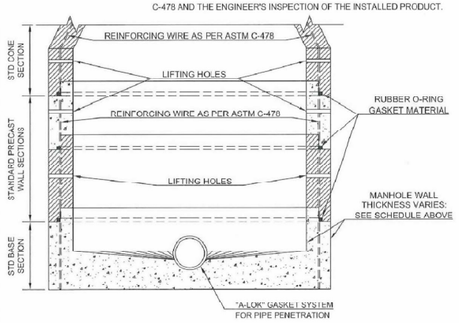

PRECAST MANHOLE WALL DETAIL

DATE	APPROVED BY:	APPROVED BY:	
03/13/14	ERIC J. WENGER, P.E., CITY ENGINEER DATE:	MARSHA W. SLAUGHTER, P.E., UTILITIES DIRECTOR DATE: 3/14/14	S-16

OKLAHOMA CITY UTILITIES DEPARTMENT

SANITARY SEWER STANDARD DETAIL

1. MANHOLE TOPS SHALL BE CONSTRUCTED IN ACCORDANCE WITH ASTM C-478 LIFTING HOOKS SHALL BE CONSTRUCTED AS PER MANUFACTURERS RECOMMENDATION.
2. ALL INSIDE SURFACES OF PRECAST FLAT TOP SHALL BE COATED WITH A DRY FILM THICKNESS OF NOT LESS THAN EIGHT (8) MILS OF TNEMEC 69 HI-BUILD EPOXOLINE II, OR APPROVED EQUAL.
3. WHEN DIRECTED BY THE ENGINEER, A SET OF THREE (3) CYLINDERS, THREE-INCHES (3") IN DIAMETER SHALL BE CUT FROM RANDOMLY SELECTED MANHOLE TOPS AND TESTED FOR A MINIMUM COMPRESSIVE STRENGTH OF 4000 PSI.
4. ACCEPTANCE OF THE MANHOLE TOP STRUCTURE SHALL BE BASED ON THE CONFORMANCE AND PERFORMANCE OF MATERIALS REQUIRED IN ASTM C-478 AND THE ENGINEER'S INSPECTION OF THE INSTALLED PRODUCT.

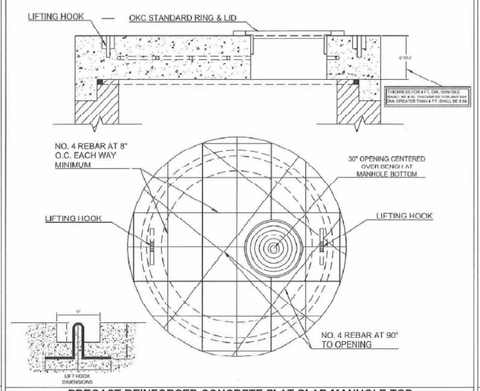

PRECAST REINFORCED CONCRETE FLAT SLAB MANHOLE TOP

DATE	APPROVED BY:	APPROVED BY:	
03/13/14	ERIC J. WENGER, P.E., CITY ENGINEER DATE:	MARSHA W. SLAUGHTER, P.E., UTILITIES DIRECTOR DATE: 3/14/14	S-17

OKLAHOMA CITY UTILITIES DEPARTMENT

SANITARY SEWER STANDARD DETAIL

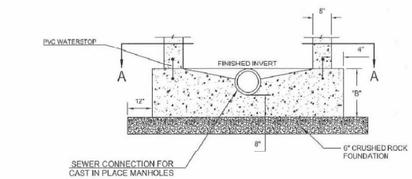

SCHEDULE OF THICKNESS	
PIPE DIAMETER	"C"
6"	1' - 6"
10"	1' - 10"
12"	2' - 1"
15"	2' - 4"
18"	2' - 8"
21"	3' - 0"
24"	3' - 3"

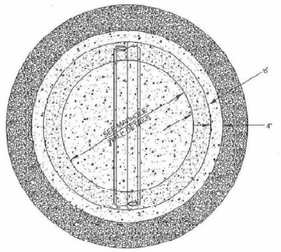

SECTION A-A

CAST-IN-PLACE CONCRETE MANHOLE BASE SECTION

DATE	APPROVED BY:	APPROVED BY:	
03/13/14	ERIC J. WENGER, P.E., CITY ENGINEER DATE:	MARSHA W. SLAUGHTER, P.E., UTILITIES DIRECTOR DATE: 3/14/14	S-18

OKLAHOMA CITY UTILITIES DEPARTMENT

SANITARY SEWER STANDARD DETAIL

NOTE*
1. ALL PIPE CLAMPS SHALL BE STAINLESS STEEL
2. NEOPRENE EPDM BLENDED COMPOUND BOOT SHALL MEET ASTM C-923

SUGGESTED PIPE O.D. RANGE (IN.)	HOLE & BOOT DIAMETER DIMENSIONS			
	A	B	C	D
3.5" - 4.5"	7"	6.5"	4.5"	6"
5.5" - 7"	12"	10.5"	6.5"	8"
7" - 10"	12"	10.5"	9"	8"
8.5" - 9.5"	12"	10.5"	9.5"	8"
9.5" - 11"	16"	14.5"	10.5"	8"
10.5" - 12"	16"	14.5"	12"	8"
12" - 13.5"	16"	14.5"	13.5"	8"
14.5" - 16.5"	20"	18.5"	15.5"	8"
15.5" - 17.5"	20"	18.5"	17"	8"
18.5" - 21.5"	24"	22.5"	20.5"	8"

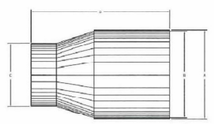

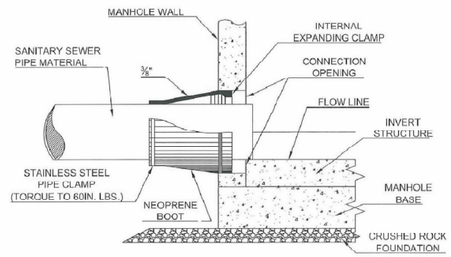

MANHOLE PIPE CONNECTION FOR CAST IN PLACE MANHOLES

DATE	APPROVED BY:	APPROVED BY:	
03/13/14	ERIC J. WENGER, P.E., CITY ENGINEER DATE:	MARSHA W. SLAUGHTER, P.E., UTILITIES DIRECTOR DATE: 3/14/14	S-19

OKLAHOMA CITY UTILITIES DEPARTMENT

SANITARY SEWER STANDARD DETAIL

1. GENERAL -- Cast iron rings, tops, covers, grating and all cast iron fitting shall be sound, true to form and thickness, and neatly finished and shall fit together in a satisfactory manner. Castings shall be clean, uniform and whole without blow or sand holes, deposit, hard spots, shrinkage distortion or any other surface defects which would impair serviceability. Casting surfaces shall be smooth and well-cleaned by shot blasting or other approved cleaning method. Plugging or filling holes or other defects shall not be permitted. Parting fins and pouring gates shall be removed. Sharp edges resulting from fabrication shall be dulled by acceptable method to ensure safety in handling. Casting shall conform to the requirements of the Standard Specification for Grey Iron Fittings ASTM A-48, Class "30 B" for rings and "35 B" for covers and the approved Standard Details for Manhole Rings and Covers.

   All rings and covers shall be accurately and carefully placed. All rings shall be beaded in a substantial layer of mortar, shall have a full bearing and shall be set to the exact grade. Unless other wise shown, top of covers shall be flush with or slightly above the surrounding surface. When each cover is placed in any position on the ring, the side play shall not exceed one-eighth (1/8") inch in any direction.

2. RINGS -- Rings may be manufactured in accordance with the Standard Detail for Reversible Manhole Rings.
3. COVERS --
   A GENERAL -- Manhole covers may be manufactured in accordance with the appriolate Standard Details for Vented of Non-Vented Covers.
   B COATING -- When called for on the plans or specified, the underside of all manhole covers shall be given one (1) coat of asphalt varnish after visual inspection and approval on the job site.
   C APPLICATION -- All lids (covers) in street right-of-way shall be non-vented and include rainguard inflow protectors.
4. CASTING WEIGHTS -- The minimum weight of casting will be not less than shown below:

Ring Only	200 LBS
Cover Only	150 LBS
Totals	350 LBS

MANHOLE LID / RING GENERAL NOTES

DATE	APPROVED BY:	APPROVED BY:	
03/13/14	ERIC J. WENGER, P.E. CITY ENGINEER DATE:	MARSHA W. SLAUGHTER, P.E., UTILITIES DIRECTOR DATE: 3/14/14	S-20

OKLAHOMA CITY UTILITIES DEPARTMENT

SANITARY SEWER STANDARD DETAIL

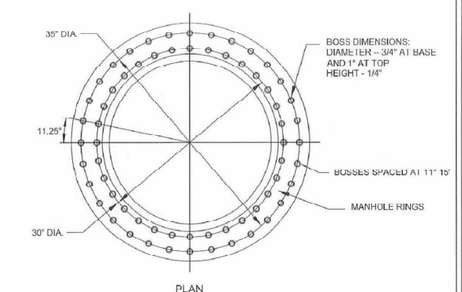

PLAN

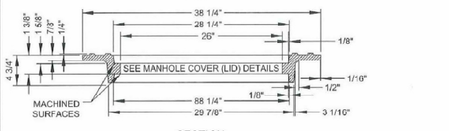

SECTION

AS SHOWN FOR OUT OF PAVING INSTALLATION
REVISED FOR IN PAVING INSTALLATION

GENERAL NOTES:

1. FINISH EXCESS IRON AND FINS; MACHINE SEATING SURFACES FLAT TO NOTE DIMENSIONS.
2. FILLETS SHALL BE 1/4" UNLESS OTHERWISE SPECIFIED.
3. UNLESS OTHERWISE SHOWN, ALL DIMENSIONS ARE IN INCHES.

REVERSIBLE MANHOLE RING

DATE	APPROVED BY:	APPROVED BY:	
03/13/14	ERIC J. WENGER, P.E. CITY ENGINEER DATE:	MARSHA W. SLAUGHTER, P.E., UTILITIES DIRECTOR DATE: 3/14/14	S-21

OKLAHOMA CITY UTILITIES DEPARTMENT

SANITARY SEWER STANDARD DETAIL

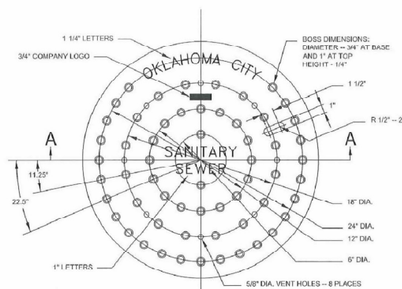

PLAN OF TOP

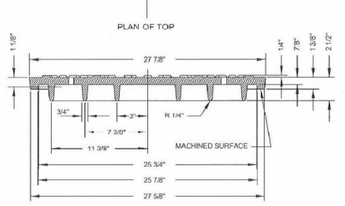

SECTION A-A

VENTED MANHOLE COVER 1 of 2

DATE	APPROVED BY:	APPROVED BY:	
03/13/14	ERIC J. WENGER, P.E., CITY ENGINEER DATE:	MARSHA W. SLAUGHTER, P.E., UTILITIES DIRECTOR DATE: 3/14/14	S-22

OKLAHOMA CITY UTILITIES DEPARTMENT

SANITARY SEWER STANDARD DETAIL

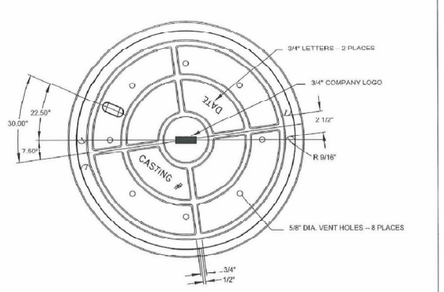

PLAN OF UNDERSIDE



SECTION THRU PICK SLOT

GENERAL NOTES:

1. FINISH EXCESS IRON AND FINS; MACHINE SEATING SURFACES FLAT TO NOTE DIMENSIONS.
2. FILLETS SHALL BE 1/4" UNLESS OTHERWISE SPECIFIED.
3. UNLESS OTHERWISE SHOWN, ALL DIMENSIONS ARE IN INCHES.

VENTED MANHOLE COVER 2 of 2

DATE	APPROVED BY:	APPROVED BY:	
03/13/14	ERIC J. WENGER, P.E., CITY ENGINEER DATE:	MARSHA W. SLAUGHTER, P.E., UTILITIES DIRECTOR DATE: 3/14/14	S-23

OKLAHOMA CITY UTILITIES DEPARTMENT

The City of Oklahoma City
Utilities Department
Engineering Division

NO.	DATE	DESCRIPTION

SANITARY SEWER STANDARD DETAILS

DATE:	03/14/14
DRAWN BY:	JDS
CHECKED BY:	MWS/EJW

SCALE: AS SHOWN

SHEET NUMBER S-STD-03

PLOTTED: Friday, March 28, 2014 3:10:02 PM
FILE PATH:Z:\STANDARD DETAILS & WATER METER SPECIFICATIONS\UPDATED STANDARD DETAILS 2014\SEWER\WORKING\SAN-SEW-STNDS-2014-SIGNED.DWG

9/9/2016 9:57:04 AM
G:\PROJECTS\203033 OKC WC-0816 & SC-0911 & SC-0999 & SC-0976\UTILITIES\Sewer\CADDRAWINGS\PHASE 1A-SC0976\CADDRAWINGS\SANSEWER_DETAILS_SHEET_3.dwg

STATE JOB NO. 090321(17) SHEET NO. SS11

REVISIONS	
DESCRIPTION	DATE

SANITARY SEWER STANDARD DETAIL

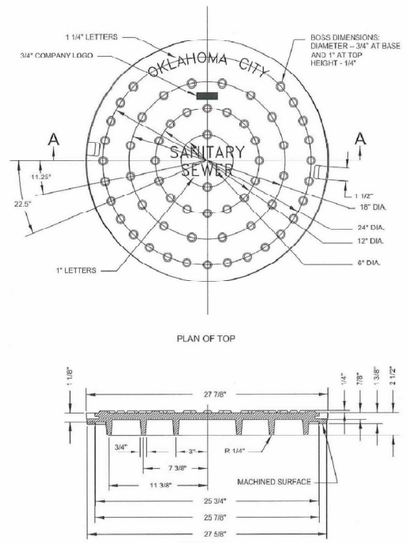

NON-VENTED MANHOLE COVER 1 of 2

03/13/14 DATE	APPROVED BY: ERIC J. WENGER, P.E., CITY ENGINEER DATE:	APPROVED BY: MARSHA W. SLAUGHTER, P.E., UTILITIES DIRECTOR DATE: 3/14/14	S-24

OKLAHOMA CITY UTILITIES DEPARTMENT

SANITARY SEWER STANDARD DETAIL

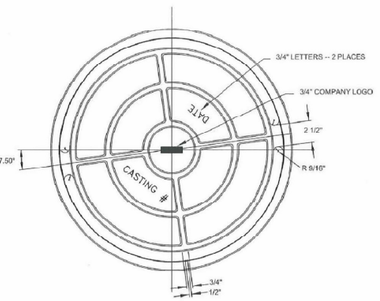

GENERAL NOTES:

1. FINISH EXCESS IRON AND FINS; MACHINE SEATING SURFACES FLAT TO NOTE DIMENSIONS.
2. FILLETS SHALL BE 1/4" UNLESS OTHERWISE SPECIFIED.
3. UNLESS OTHERWISE SHOWN, ALL DIMENSIONS ARE IN INCHES.

NON-VENTED MANHOLE COVER 2 of 2

03/13/14 DATE	APPROVED BY: ERIC J. WENGER, P.E., CITY ENGINEER DATE:	APPROVED BY: MARSHA W. SLAUGHTER, P.E., UTILITIES DIRECTOR DATE: 3/14/14	S-25

OKLAHOMA CITY UTILITIES DEPARTMENT

SANITARY SEWER STANDARD DETAIL

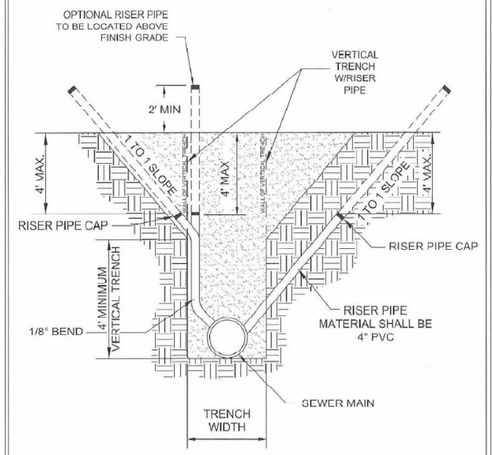

SERVICE CONNECTION INSTALLATION

03/13/14 DATE	APPROVED BY: ERIC J. WENGER, P.E., CITY ENGINEER DATE:	APPROVED BY: MARSHA W. SLAUGHTER, P.E., UTILITIES DIRECTOR DATE: 3/14/14	S-26

OKLAHOMA CITY UTILITIES DEPARTMENT

SANITARY SEWER STANDARD DETAIL

1. EXTERNAL CONNECTIONS FOR NEW CONSTRUCTION
   a. WYE BRANCHES --
      For new construction there shall be installed wye branches of size and type shown on the plans with six (6") inch openings at locations shown on the plans or as described by the Engineer.
   b. ELECTRO FUSION BONDED SADDLES --
      For new construction using "Trenchless Construction" technology with HDPE pipe, service connections shall be installed with an electro fusion bonded saddle.
2. EXTERNAL CONNECTION TO EXISTING MAIN -- Connections to existing main may be accomplished as follows:
   a. SADDLES -- Connections may be made by excavating the existing main and cutting a hole using approved equipment and installing a saddle. Sewer service connections constructed with saddles shall include straps, a one-eighth (1/8°) degree bend, and a closure piece. when existing main has been rehabilitated by trenchless method of construction, the saddle connection shall be made to the pipe/or liner.
   b. TEES -- Connections maybe made by removing a section of existing pipe and installing a wye branch. Fittings and closure assembly shall be used to make the connection and shall be supplied in a normal diameter or six (6") inches. The external connection shall be considered complete when backfilling and surface restoration is complete. Service connections constructed with wye branches shall include a on-eighth (1/8°) degree bend, elbow, and when required, a closure piece.
3. RISER
   a. INSTALLATION -- The pipe may be installed in one of four ways shown on "Service Connection Details." Vertical installation is only approved if approved by the City Engineer.
   b. SIZE AND MATERIAL -- The riser pipe shall be four inch (4") PVC.
4. LOCATOR TAPE -- A locator tape, green in color stating "CAUTION -- SANITARY SEWER RISER BURIED BELOW" shall be attached to the sanitary sewer riser and extended to a minimum of two (2') feet above the ground, the tape shall be three (3") inch wide DuraTac as manufactured by THOR Enterprises, Inc., of Sun Prairie, Wisconsin or approved equal.

SERVICE CONNECTION INSTALLATION

03/13/14 DATE	APPROVED BY: ERIC J. WENGER, P.E., CITY ENGINEER DATE:	APPROVED BY: MARSHA W. SLAUGHTER, P.E., UTILITIES DIRECTOR DATE: 3/14/14	S-27

OKLAHOMA CITY UTILITIES DEPARTMENT

SANITARY SEWER STANDARD DETAIL

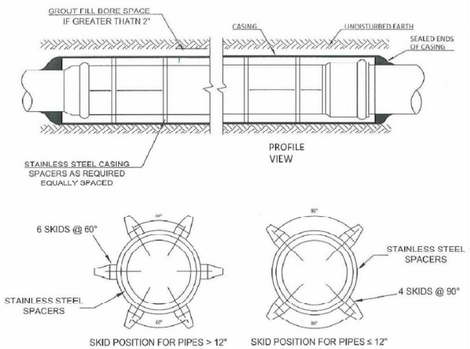

SECTION

NOTES:

PLUGGED PIPE ENDS

OPTION A - GROUT -- both ends of the casing pipe shall be plugged with a grout or concrete having a minimum compressive strength of twenty-five hundred (2500 psi) pounds per square inch or grouted masonry. Each plug shall be a minimum length of eighteen (18) inches. The grouting pressure shall be in accordance with the pipe manufacture's recommendations.

OPTION B - SEALS -- both ends shall be sealed with neoprene rubber seals with stainless steel bandings.

BORE AND ENCASEMENT DETAIL 1 of 2

03/13/14 DATE	APPROVED BY: ERIC J. WENGER, P.E., CITY ENGINEER DATE:	APPROVED BY: MARSHA W. SLAUGHTER, P.E., UTILITIES DIRECTOR DATE: 3/14/14	S-28

OKLAHOMA CITY UTILITIES DEPARTMENT

SANITARY SEWER STANDARD DETAIL

2. CASING PIPE SIZE -- Steel casing pipe shall have the following suggested minimum diameters:

PIPE NOMINAL SIZE (inches)	SUGGESTED CASING PIPE INSIDE DIAMETER (inches)
4	8 to 10
6	10 to 12
8	14 to 16
10	16 to 18
12	18 to 20
15	20 to 22
18	24 to 26
24	31 to 33
27	33 to 36
30	36 to 42
36	42 to 48
42	54 to 60
48	60 to 66

3. CASING PIPE THICKNESS -- Steel casing pipe shall have the following minimum thickness(es), in inches, for the indicated maximum depth of cover(s), in feet or as required by the railroad at the time of construction:

OUTSIDE DIAMETER (INCHES)	UNDER HIGHWAY		UNDER RAILROAD		
	WALL THICKNESS (INCHES)	MAXIMUM COVER (FEET)	BNSF (UNCOATED) WALL THICKNESS (INCHES)	UNION PACIFIC WALL THICKNESS (INCHES)	MAXIMUM COVER (FEET)
≤ 12	0.1880	30	0.2500	0.2500	30
16	0.2500	30	0.3125	0.3125	30
18	0.2500	30	0.3125	0.3125	30
20	0.2500	30	0.3750	0.3750	30
24	0.2500	30	0.4375	0.4375	30
30	0.3220	30	0.5000	0.5000	30
36	0.3750	30	0.5625	0.5625	30
42	0.3750	25	0.5625	0.5625	30
48	0.4380	25	0.6250	0.6250	25
54	0.4380	25	OVER 48" MUST BE APPROVED BY BNSF RR	OVER 48" MUST BE APPROVED BY U.P.R.R.CO.	20
60	0.4380	25			20
66	0.4380	20			20

4. CASING MATERIAL -- Steel casing pipe shall conform with ASTM A-139, Standard Specification for Electric-Fusion (ARC)-Welded Steel Pipe (NPS4 and over). The steel material shall be new, smooth wall, carbon steel, Grade R, with a minimum tensile strength, and minimum thrity-five-thousand (35,000 psi) pounds per square inch yield strength.

BORE AND ENCASEMENT DETAIL 2 of 2

03/13/14 DATE	APPROVED BY: ERIC J. WENGER, P.E., CITY ENGINEER DATE:	APPROVED BY: MARSHA W. SLAUGHTER, P.E., UTILITIES DIRECTOR DATE: 3/14/14	S-29

OKLAHOMA CITY UTILITIES DEPARTMENT

The City of Oklahoma City
Utilities Department
Engineering Division

NO.	DATE	DESCRIPTION

SANITARY SEWER STANDARD DETAILS

DATE:	03/14/14
DRAWN BY:	JDS
CHECKED BY:	MWS/EJW

SCALE: AS SHOWN

SHEET NUMBER S-STD-04

STATE JOB NO. 09032(17) SHEET NO. SS12

FILE PATH-Z:\STANDARD DETAILS & WATER METER SPECIFICAT ONS\UPDATED STANDARD DETAILS 2014\SEWERWORKING\SAN-SEW-STNDS-2014-SIGNED.DWG
9/9/2016 10:02:18 AM
G:\PROJECTS\203033 OKC WC-0816 & SC-0911 & SC-0959 & SC-0976\Utilities\Sewer\CADDRAWINGS\PHASE 1A-SC0976\CADDRAWINGS\SANSEWER_DETAIL SHEET_4.dwg

SURVEY CONTROL DATA

1. HORIZONTAL CONTROL:

   A. HORIZONTAL CONTROL FOR THIS SURVEY IS IN OKLAHOMA DEPARTMENT OF TRANSPORTATION PLANE COORDINATE SYSTEM. LAMBERT PROJECTION (NORTH ZONE). ALL COORDINATES SHOWN ARE ON OKLAHOMA DEPARTMENT OF TRANSPORTATION PLANE COORDINATE SYSTEM WHICH WERE DERIVED BY MULTIPLYING THE USC&GS OKLAHOMA PLANE COORDINATES BY THE COMBINED ADJUSTMENT FACTOR OF 1.00010. THE OKLAHOMA DEPARTMENT OF TRANSPORTATION COORDINATE SYSTEM PLANE IS 2350 FEET ABOVE THE OKLAHOMA USC&GS PLANE.

   B. ACCURACY - 3RD ORDER OR BETTER

2. BEARINGS:

   THE BEARINGS SHOWN HEREIN OR HEREON ARE GRID BEARINGS DERIVED FROM THE DEPARTMENT OF TRANSPORTATION PLANE COORDINATE SYSTEM AND ARE NOT ASTRONOMICAL. THE ANGLE OF VARIANCE BETWEEN GRID NORTH (GN) AND THE ASTRONOMICAL TRUE NORTH (TN) IS DEPICTED DIAGRAMMATICALLY.

3. VERTICAL CONTROL:

   A. LEVEL DATUM IS MEAN SEA LEVEL (NGS), NGVD29.

   B. ACCURACY - 3RD ORDER OR BETTER

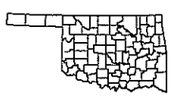

LOCATION MAP

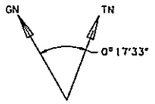

CONVENTIONAL SIGNS

- INTERSTATE HIGHWAY
- U.S. HIGHWAY
- STATE HIGHWAY
- PROPOSED ROAD
- RAILROADS
- RANGE & TOWNSHIP LINES
- SECTION LINES
- QUARTER SECTION LINES
- FENCES
- GROUND LINE
- EXISTING ROADS
- BASE LINE
- GRADE LINES
- TELEPHONE & TELEGRAPH
- POWER LINES
- OIL WELLS
- BUILDINGS
- DRAINAGE STRUCTURES-IN-PLACE
- DRAINAGE STRUCTURES-NEW
- RIGHT-OF-WAY LINES-EXISTING
- RIGHT-OF-WAY LINES-NEW
- RIGHT-OF-WAY MARKERS-IN PLACE
- RIGHT-OF-WAY MARKERS-REMOVE & RESET
- RIGHT-OF-WAY MARKERS-NEW
- CONTROLLED ACCESS
- SS — EXISTING SANITARY SEWERS
- G — EXISTING GAS LINES
- W — EXISTING WATER LINES
- TUG — EXISTING TELEPHONE CABLES UNDERGROUND

UTILITY CONTACT LIST	
AT&T	(405)275-8805
COX COMMUNICATIONS	(405)600-6269
LEVEL 3 COMMUNICATIONS	(405)471-3647
OG&E	(800)272-9741
ONG	(800)664-5463
DCP MIDSTREAM LLC/EDMOND	(405)341-1266
MCLEOD USA	(317)924-2592
QWEST COMMUNICATIONS	(800)899-7780
SOONER UTILITIES (WATER)	(405)721-4700
STEPHENS & JOHNSON OPERATING CO.:	(405)235-4146
TOWN OF VALLEY BROOK	(405)677-6948
WHITE OPERATING CO.	(405)239-6001
CITY OF OKLAHOMA CITY	(405)297-2278

THIS SURVEY MEETS THE OKLAHOMA MINIMUM STANDARDS FOR THE PRACTICE OF LAND SURVEYING AS ADOPTED BY THE OKLAHOMA STATE BOARD OF REGISTRATION FOR PROFESSIONAL ENGINEERS AND LAND SURVEYORS, JUNE 11, 2001.

SPECIFICATIONS FOR SURVEYS FOR PRIMARY AND SECONDARY HIGHWAYS DATED FEB 6, 2006 GOVERN.

SDS 01 OF 46

STATE OF OKLAHOMA
DEPARTMENT OF TRANSPORTATION

SURVEY OF

STATE HIGHWAY

SWO 2923(1)

STATE JOB NO. 09032(17)

OKLAHOMA COUNTY

I-35 & I-240 INTERCHANGE

STA. 53+29.93 A035 BEGIN
STA. 133+02.75 A035 END.

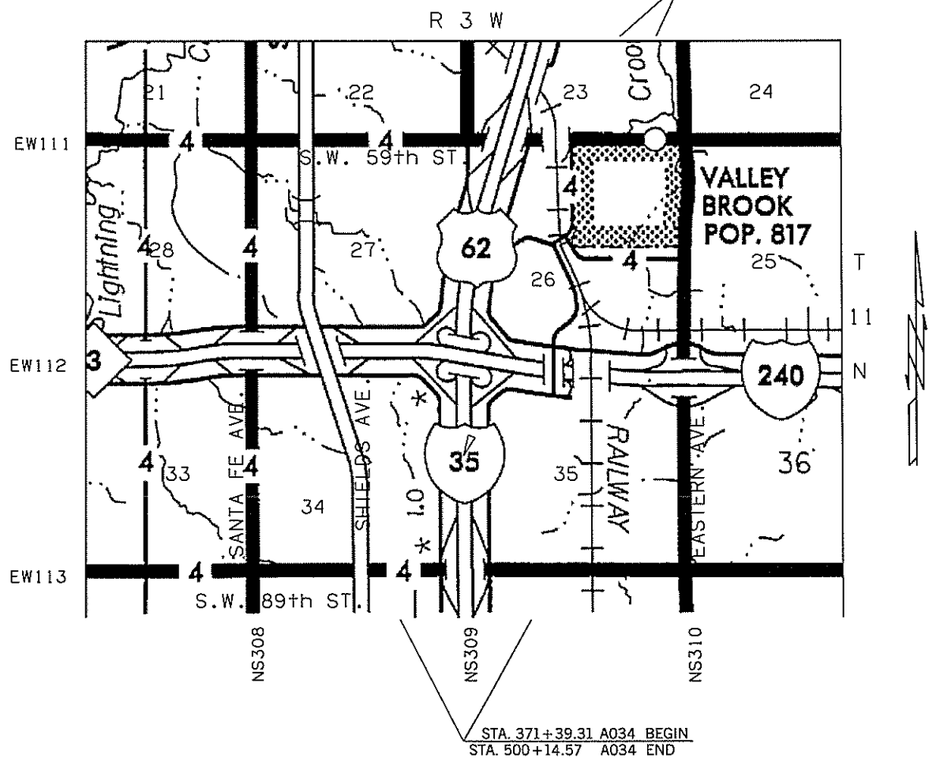

STA. 371+39.31 A034 BEGIN
STA. 500+14.57 A034 END

PROJECT LENGTH 10,590 Ft. 2.01 MI.

BEGINNING STATION : STA. 371+39.31 A034 BEGIN
ENDING STATION : STA. 500+14.57 A034 END

PROJECT LENGTH 7,973 Ft. 1.51 MI.

BEGINNING STATION : STA. 53+29.93 A035 BEGIN
ENDING STATION : STA. 133+02.75 A035 END

SURVEY SHEET INDEX

NO.	DESCRIPTION
01 OF 46	TITLE SHEET
02-05 OF 46	HISTORICAL LETTER
06-07 OF 46	BM & CHECKLEVELS LIST
08-11 OF 46	COORDINATE LIST
12-25 OF 46	ALIGNMENT REPORT
26-46 OF 46	SURVEY DATA SHEETS

STATE OF OKLAHOMA
DEPARTMENT OF TRANSPORTATION

SWO 2923(1) *Job/Piece 09032(17)* *Engr. Contract No. 1060*

LAND SURVEYOR'S CERTIFICATION

I hereby certify that all land and property sub-division distances, angles, corners and monumentation made or used in conjunction with this survey and depicted or recorded herein or hereon were recovered, established, or re-established in substantial conformity with:

- *Applicable instructions contained in the U.S. Government Bureau of Land Management publication "Manual of Surveying Instructions";*
- *its supplement, "Restoration of Lost or Obliterated Corners and Subdivision of Sections";*
- *"Oklahoma Minimum Standards for the Practice of Land Surveying" as adopted by the State Board of Registration for Professional Engineers and Land Surveyors; and*
- *Sound land surveying practices;*
  including a through search, study, analysis, and consideration of all existing records and field evidence.

I further certify that all survey monuments depicted exist and that all land survey work was done by me or under my direct supervision and that it is true, accurate, and correct to the best of my knowledge and belief.

Dated this 6th *day of* May *20* 16

POE & ASSOCIATES, INC.
OKLAHOMA CITY, OKLAHOMA

(SEAL)

Land Surveyor _____
Signature

JUSTIN LEE TALCOTT
Printed Name

Oklahoma Registered Land Surveyor No. 1646

Certificate of Authorization No. 541

LICENSED PROFESSIONAL LAND SURVEYOR
JUSTIN LEE TALCOTT
1646
OKLAHOMA

Electronic File Transfer Disclaimer:

These Files, Drawings and/or Notes are provided for information only. The Oklahoma Department of Transportation (ODOT) and the Owner cannot be held responsible for the content or accuracy of these Files, Drawings and/or Notes due to conversions, software translations, or any other manipulation of said Files, Drawings and/or Notes. ODOT expressly disclaims any responsibility arising from any use of these Files, Drawings and/or Notes. To the full extent permitted by applicable law, the recipient of these Files, Drawings and/or Notes hereby agrees to defend, indemnify, and hold harmless ODOT and the Owner from and against any and all claims, suits, actions, damages, loss, liability or costs of every nature or description (including reasonable attorney's fees) arising from, or in any way attributable to or connected with any of these Files, Drawings and/or Notes.

BEFORE YOU DIG CALL OKIE

PLS			POE & ASSOCIATES, OKLAHOMA CITY, OK SURVEY DIVISION
DRAWN			**SURVEY DATA SHEET**
CHECKED			
APPROVED			
CREW	PWE		SWO 2923(1) PROJECT NO. 09032(17) SHEET NO. SD01

OKLAHOMA COUNTY

Oklahoma Department of Transportation
Survey Division (405)521-2621 Fax (405)522-0364

Date: September 1, 2015

To: Mr. William Leroy Tackett, Chief of Surveys

From: Justin Lee Talcott, Professional Land Surveyor

Subject: SWO 2923(1), J/P 09032(17) – Oklahoma County
I-35/I-240 Interchange

Historical Letter & Written Report

1. GENERAL:

Survey Began: November 21, 2006
Survey Completed: August 1, 2015

Personnel on this Survey:

Justin Lee Talcott	Professional Land Surveyor, OK #1646
Jack B. Weaver (Retired)	Professional Land Surveyor, OK #955
Robert M. Perez	Assistant Surveyor
Mickey Parsons	Assistant Surveyor
Andrew Moss	Assistant Surveyor
Chad Baker	Assistant Surveyor
Tremetria Williams	CAD Technician

2. PURPOSE:

The purpose of this survey was to furnish sufficient data to develop plans to reconstruct the I-35/I-240 Interchange in Oklahoma City, Oklahoma.

3. SURVEY LIMITS:

I-35: Along I-35 from S.E. 82nd Street, North to S.E. 59th Street (approximate centerline length = 1.50 miles).

I-240: Along I-240 from Santa Fe Avenue, East to Eastern Avenue (approximate centerline length = 2.00 miles).

1. ALIGNMENT:

I-35 MAINLINE (A035): The Centerline of Survey for this mainline is along and identical to the centerline of present I-35 as established and shown on FAP I-381(4) plans.

SE 82ND STREET CONNECTION (A032): The Centerline of Survey for this connection is along and identical to the centerline of present SE 82nd Street as established and shown on FAP IR-35-3(074)121 plans being 8.7 feet south of the quarter section line of Section 34, T11N-R3WIM.

SE 66TH STREET CONNECTION (A031): The Centerline of Survey for this connection is along the quarter section lines of Sections 26 & 27, T11N-R3WIM and identical to the centerline of present SE 66th Street as established and shown on FAP IR-35-3(074)121 plans.

SE 59TH STREET CONNECTION (A030): The Centerline of Survey for this connection is along the north line of Section 26, T11N-R3WIM and identical to the centerline of present SE 59th Street as established and shown on FAP IR-35-3(110)123 plans.

I-240 MAINLINE (A036): The Centerline of Survey for this mainline is along and identical to the centerline of present I-240 as established and shown on FAP IR-240-1(323) west of the interchange and FAP IR-240-4(86)157 east of the interchange. Utilizing FAP F-369(094) for the Shields Blvd. crossing and FAP I-381(4) for the Crossroads interchange. The north I-240 service road alignments at approximately station 438+00.00 do not graphically match, but are calculated from the same I-240 centerline with different offsets from different reference plans. The service road going west from this point using reference plan FAP I-381(4) matches the existing back of curb and the service road going east from this point using reference plan FAP I-240(86)157 and matches the existing centerline.

SANTA FE AVENUE CONNECTION (A011): The Centerline of Survey for this connection is along the west line of Sections 27 & 34, T11N-R3WIM and identical to the centerline of present Santa Fe Avenue as established and shown on FAP IR-240-1(323) plans.

SHIELDS BOULEVARD CONNECTION (A012): The Centerline of Survey for this connection is along and identical to the centerline of present Shields Boulevard as established and shown on FAP IR-240-1(323) and FAP F-369(094) plans.

BNSF RAILROAD MAINLINE (A015): The Centerline of Survey for this mainline is along and identical to the centerline of present BNSF Railroad as established and shown on FAP I-240-4(86)157 plans.

EASTERN AVENUE CONNECTION (A014): The Centerline of Survey for this connection is along the east line of Sections 26 & 35, T11N-R3WIM and identical to the centerline of present Eastern Avenue as established and shown on FAP I-240-4(86)157 and SWO 5030(01) plans.

PLS			POE & ASSOCIATES, OKLAHOMA CITY, OK SURVEY DIVISION
DRAWN			SURVEY DATA SHEET
CHECKED			
APPROVED			
CREW	POE		SWO 2923(1) PROJECT NO. 09032(17) SHEET NO. SD02

OKLAHOMA COUNTY

1. STATIONING:

I-35 MAINLINE: Stationing for this survey is identical to present I-35 and taken from FAP I-381(4) plans. Beginning at SE 82nd Street, the present station 53+29.93 is equal to FAP I-381(4) station 53+36.10, present station 79+77.15 is equal to FAP I-381(4) station 79+75.83 at the centerline of crossroads interchange and present PT station 130+74.84 is equal to FAP I-381(4) station 130+70.85 and ending with present station 133+02.75 being equal to FAP I-IR-33-3(110)123 station 133+02.69.

SE 82ND STREET CONNECTION: Stationing for this survey is identical to present SE 82nd Street taken from FAP I-IR-35-3(074)121 plans with a centerline of I-35 station of 99+02.99 and extending west 500' to station 94+02.99 and east 500' to station 104+02.99.

SE 66TH STREET CONNECTION: Stationing for this survey is identical to present SE 66th Street taken from FAP I-IR-35-3(074)121 plans with a centerline of I-35 station of 209+02.99 and extending west 500' along the section line to station 204+02.99 and east 500' (passing the NW corner of Section 26 at 97.02' for a station of 210+00.01) along the section line to station 214+02.99.

SE 59TH STREET CONNECTION: Stationing for this survey is identical to present SE 59th Street taken from FAP IR-35-3(110)123 plans with a centerline of I-35 station of 100+00.00 and extending west along the section line 500' to station 95+00.00 passing the Northwest corner of Section 26 present station 97+60.928 equal to said plans 97+60.88 and east from the centerline along the section line for 500' to station 105+00.00.

I-240 MAINLINE: Stationing for this survey is identical to present I-240 as established and shown on FAP IR-240-1(323), FAP I-381(4) and FAP I-240-4(86)157plans. Beginning at the centerline of I-240 and Santa Fe with a station of 376+33.43 being equal to station 376+33.72 FAP IR-240-1(323), running through the station at the centerline of Shields Blvd 393+43.79 being equal to same station 393+43.79 FAP IR-240-1(323), through the station equation at 415+08.92 Back/415+00.00 Ahead equal to same equation from FAP IR-240-1(323), through the centerline of I-35 station 428+14.28 being equal to station 428+14.27 FAP I-381(4) and ending at the centerline of Eastern Avenue station 482+14.52 being equal to 482+01.92 FAP I-240-4(86)157 plans.

SANTA FE CONNECTION: Stationing for this survey is identical to present Santa Fe as established and shown on FAP IR-240-1(323) plans with a centerline of I-240 present station of 100+96.72 being equal to station 100+97.00 on same plans and extending north 500' along the section line to station 105+96.72 and south along the section line (through the NW corner of Section 34 at station 100+00.00) for 500' to station 95+96.72.

SHIELDS BOULEVARD CONNECTION: Stationing for this survey is identical to present Shields Boulevard as established and shown on FAP IR-240-1(323) and FAP F-369(094) plans with a centerline of I-240 present station of 147+61.38 being equal to same station 147+61.38 on same plans and extending northwest 500' to station 152+61.38 and southeast for 500' to station 142+61.38.

BNSF RAILROAD MAINLINE: Stationing for this survey is identical to the present BNSF railroad as shown on FAP I-240-4(86)157 plans. Present main line station with centerline of I-240 is 20564+76.90 which began at the PC station 20566+70.42 south of I-240 and extended north through the existing curve to the Plaza Mayor Boulevard crossing.

EASTERN AVENUE CONNECTION: Stationing for this survey is identical to present Eastern Avenue as established and shown on FAP I-240-4(86)157 plans with a centerline of I-240 station of 25+10.87 and extended north along the section line (through the SE corner of Section 26 at station 26+34.64) for 500' to station 30+10.87 and extended south along the section line for 500' to station 20+10.87.

1. HORIZONTAL CONTROL:

Horizontal control for this survey is the Oklahoma Department of Transportation Plane Coordinate System, Lambert Projection (North zone). All coordinates shown are Oklahoma Department of Transportation Plane coordinates which were derived by multiplying the USC&GS Oklahoma Plane coordinates by the combined adjustment factor of 1.00010. The Oklahoma Department of Transportation Coordinate System Plane is 2350 feet above the Oklahoma USC&GS Plane. We established 5 control points (O-55-1837, O-55-1838, O-55-1839, O-55-1840, O-55-1841) within the survey limits.

2. VERTICAL CONTROL:

Vertical Control for this survey is NGVD29 datum matching the Oklahoma Department of Transportation Plane Coordinate System establishing 49 benchmarks along our project.

3. MEASURMENT UNITS:

The distances, coordinates, and elevations shown on this survey are in US Survey Feet. All angles and grid bearings shown are in degrees, minutes, and seconds derived from the Oklahoma Department of Transportation Plane Coordinate System and are not astronomical.

4. TOPOGRAPHY/DIGITAL TERRAIN MODEL:

Topography and surface features were collected by aerial photogrammetry, performed and processed by ADS, our sub-consultant for this project. Traditional survey methods (RTK and Total Station) were used alongside the aerial photogrammetry to supplement areas needed.

5. LAND TIES:

All land corners that were required on this survey have been researched and verified in the field as existing, set this survey, or calculated. All corners were easily accessible and found within road right of way, a request for certified corners revealed at least one (1) existing monument at every corner.

PLS		
DRAWN		
CHECKED		
APPROVED		
CREW	POE	

POE & ASSOCIATES, OKLAHOMA CITY, OK
SURVEY DIVISION

SURVEY DATA SHEET

SWO 2923(1) PROJECT NO. 09032(17) SHEET NO. SD03

OKLAHOMA COUNTY

Southwest Corner Section 27, T11N-R3WIM
I found this corner in place, being a ½" iron pin, ODOT monument number O-55-1367 and is in agreement with previous certified corner records. This monument is located just north of the intersection of South Santa Fe and the south service road of Interstate 240.

West Quarter Corner of Section 27, T11N-R3WIM
I found this corner in place, being a P.K. nail, ODOT monument number O-55-1368, and is in agreement with previous certified corner records. This monument is located at the intersection of South Santa Fe and SE 66th Street.

Northwest Corner Section 27, T11N-R3WIM
I found this corner in place, being a 3/8" iron pin with a new ODOT monument number O-55-1850 and is in agreement with previous certified corner records. This monument is located in the intersection of South Santa Fe and SE 59th Street.

North Quarter Corner Section 27, T11N-R3WIM
I found this corner in place, being a ½" iron pin with a new ODOT monument number O-55-1851 and is in agreement with previous certified corner records. This monument is located in the intersection of South Byers Avenue and SE 59th Street.

Northeast Corner Section 27, T11N-R3WIM
I found this corner in place, being a chiseled "X" in the concrete intersection of the I-35 Service Road and SE 59th Street. This monument has an ODOT monument number of O-55-97 and is in agreement with previous certified corner records.

East Quarter Corner Section 27, T11N-R3WIM
I found this corner in place, being a chiseled "X" in concrete west of the intersection of I-35 Service Road and SE 66th Street. This monument has an ODOT monument number of O-55-99 and is in agreement with previous certified corner records.

Southeast Corner Section 27, T11N-R3WIM
I found this corner in place, being a ½" iron pin, ODOT monument number O-55-634 and is in agreement with previous certified corner records. We found this monument located on the east edge of the northbound I-35 driving lane approximately a foot west of the bridge support wall.

South Quarter Corner Section 27, T11N-R3WIM
I found this corner in place, being a P.K. nail, ODOT monument number O-55-1313 and is in agreement with previous certified corner records. This monument is located on the north edge of the I-240 Service Road and just west of the east bound I-240 on ramp.

Center Corner Section 27, T11N-R3WIM
I found this corner in place, being a P.K. nail, ODOT monument number O-55-1314 and is in agreement with previous certified corner records. I also found a P.K. nail N 85°12'30"E a distance of 0.66', this P.K. nail was not accepted. Monument is located in the intersection of South Byers Avenue and SE 66th Street.

North Quarter Corner Section 26, T11N-R3WIM
I found this corner in place, being a P.K. nail, ODOT monument number O-55-98 and is in agreement with previous certified corner records. This monument is located NE of the intersection of SE 59th Street and Crossroads Blvd.

Northeast Corner Section 26, T11N-R3WIM
I found this corner in place, being a P.K. nail, ODOT monument number O-55-1766 and is in agreement with previous certified corner records. This monument is located approximately 50 feet west of the intersection of SE 59th Street and South Eastern Avenue.

East Quarter Corner Section 26, T11N-R3WIM
I found this corner in place, being a chiseled "X" in concrete in the approximate centerline of South Eastern Avenue and agrees with previous certified corner records. This monument has as ODOT number of O-55-1767.

Southeast Corner Section 26, T11N-R3WIM
I found this corner in place, being a ½" iron pin, ODOT monument number O-55-628 and is in agreement with previous certified corner records. I also found a 3/8" iron pin approximately 2' south that doesn't match references or certified corner records. This monument is located in the median of South Eastern Avenue and approximately 73' north of the north pier under I-240.

South Quarter Corner Section 26, T11N-R3WIM
I found this corner in place, being an ODOT brass monument with a number of O-55-627 and is in agreement with previous certified corner records. This monument is located south of the I-240 Service Road and east of the west bound I-240 on ramp.

Center Corner Section 26, T11N-R3WIM
I found this corner in place, being a ½" iron pin, ODOT monument number O-55-1315 and is in agreement with previous certified corner records. Monument is located under a chain link fence, northeast of SE 66th Street and northwest of a driveway.

East Quarter Corner Section 35, T11N-R3WIM
I found this corner in place, being a P.K. nail, ODOT monument number O-55-629 and is in agreement with previous certified corner records. This monument is located in the approximate centerline of South Eastern Avenue.

Southeast Corner Section 35, T11N-R3WIM
I found this corner in place, being a mag nail with the head broke off, ODOT monument number O-55-630 and is in agreement with previous certified corner records. This monument is in the approximate center of the concrete intersection of South Eastern Avenue and SE 89th Street.

South Quarter Corner Section 35, T11N-R3WIM
I found this corner in place, being an ODOT brass cap with a monument number of O-55-631 and is in agreement with previous certified corner records. This monument is east of the centerline of the intersection of SE 89th Street and Pole Road.

PLS			POE & ASSOCIATES, OKLAHOMA CITY, OK SURVEY DIVISION
DRAWN			SURVEY DATA SHEET
CHECKED			
APPROVED			
CREW	POE		SWO 2923(1) PROJECT NO. 0903201(7) SHEET NO. SD04

OKLAHOMA COUNTY

Southwest Corner Section 35, T11N-R3WIM
I found this corner in place, being a chiseled "X" west of the concrete intersection of SE 89th Street and the I-35 Service Road. This monument has an ODOT number of O-55-632 and is in agreement with previous certified corner records.

West Quarter Corner Section 35, T11N-R3WIM
I found this corner in place, being a chiseled "X" west of the concrete intersection of SE 82nd Street and the I-35 Service Road, north of the centerline of SE 82nd Street. This monument has an ODOT number of O-55-633 and is in agreement with previous certified corner records.

Center Corner Section 35, T11N-R3WIM
I found this corner in place, being a 3/8" iron pin, ODOT monument number O-55-635 and is in agreement with previous certified corner records. This monument is located approximately 40' east of Pole Road and is in the bottom of a drainage channel with a t-post set nearby.

South Quarter Corner Section 34, T11N-R3WIM
I found this corner in place, being a mag nail with a Durham washer, ODOT monument number O-55-1306 and is in agreement with previous certified corner records. This monument is in the approximate center of the intersection of SE 89th Street and South Shields Blvd.

Southwest Corner Section 34, T11N-R3WIM
I found this corner in place, being a mag nail with a Hale & Buckley washer, ODOT monument number O-55-1849 and is in agreement with previous certified corner records. This monument is in the approximate center of the intersection of SE 89th Street and South Santa Fe Avenue.

West Quarter Corner Section 34, T11N-R3WIM
I found this corner in place, being a 3/8" iron pin, ODOT monument number O-55-1366 and is in agreement with previous certified corner records. This monument is in the approximate centerline of South Santa Fe Avenue.

Center Corner Section 34, T11N-R3WIM
I found this corner in place, being a ½" iron pin, ODOT monument number O-55-1312 and is in agreement with previous certified corner records. This monument is approximately 6' east of the curb of the northbound Shields Blvd and approximately 50' north of the centerline of a driveway.

1. ENVIRONMENTAL CONCERNS:

There are 2 environmental concerns documented and recorded within this survey. At the southwest corner of I-240 and Shields Blvd, approximately Sta. 390+83.00 to 393+94.00 145' Rt. to 397' Rt., Mosley's Texaco (which is now Discount Tire), 7501 S. Shields Blvd, OCC FAC #5508224 Case #064-1702, and at the southeast corner of I-240 and Shields Blvd, approximately Sta. 394+86.00 to 396+25.00 154' Rt. to 335' Rt., Shields Conoco (which is now Enterprise Rent a Car), 7500 S. Shields Blvd, OCC FAC #5508554 Case #064-0831.

1. RIGHT OF WAY:

Right of way within the survey was taken from deeds and plats acquired from the Oklahoma County courthouse, right of way division at Oklahoma Department of Transportation and supplemented with the following plans, F-369(094), FAP I-240-4(86)157, FAP I-IMY-35-(221)(247)120, FAP I-IR-35-3(074)121, FAP I-IR-35-3(108)119, FAP I-IR-35-3(110)23, FAP U-386(1), IR-240-1(323)000, IR-240-1(324)000, IR-240-1(325)000. The railroad right of way along the north and east of the current BNSF Railway was taken from the Crossroads Industrial Park subdivision plat. The south and east side of said railway was taken from a description of an unplatted portion at the County Assessor's office and confirmed with a Quit Claim deed filed in book 13046, page 1571 and matches the physical evidence of the existing rails. The portion of the right-of-way between these north and south descriptions and the "triangle" portion are described at the Oklahoma County courthouse in book 4505, page 1908.

2. UTILITIES:

All utility companies servicing the project extents were contacted, after first contacting OKIE during the course of this survey. Survey crew personnel met with a locator and/or discussed per phone conversation the location of existing utilities during this survey. Utilities shown were collected and/or verified from field data, atlas maps and existing plans. Obvious gaps or omitted areas were either not located by participating utility companies or could not be verified in the field. There are 2 ODOT fiber lines of unknown pair size that cross I-35 at approximate stations 78+39.00 and 84+34.00. There is also a Century Link (formerly Qwest) fiber line of unknown pairs crossing I-240 at approximately station 458+99.00 and a Level 3 Communications Tug line of unknown pairs crossing I-240 at approximately station 460+99.31, several attempts were made to contact these 2 companies with no results.

3. EQUIPMENT USED:

Topcon HIPER V GPS receivers, Topcon GR3 GPS receivers, Topcon PS-103 Robotic Total Station Sokkia SET 330R Total Station and Sokkia B20 automatic level.

4. DATA SUBMITTED:
    1. SWO2923_1_V1.dgn
    2. SWO2923_1_V1_TOPO.dgn
    3. SWO2923_1_V1_TRI.dgn
    4. SWO2923_1_V1_SFF.dgn
    5. SWO2923_1_V1_DRA.dgn
    6. ODOT form SD-1, Transmittal Letter.
    7. ODOT form SD-41, Surveyor's Certification.
    8. ODOT form SD-11 for 5 monuments
    9. ODOT form SD-7 Utility form
    10. PDF certified corner records.
    11. Cogo Data (Coordinate List with Alignments)
    12. Historical Letter.
    13. BM's and Check Levels

Justin Lee Talcott
Professional Land Surveyor

PLS		
DRAWN		
CHECKED		
APPROVED		
CREW	POE	

POE & ASSOCIATES, OKLAHOMA CITY, OK
SURVEY DATA SHEET
SWO 2923(1) PROJECT NO. 09032(07) SHEET NO. SDO5
OKLAHOMA COUNTY

BM AND CHECKLEVELS

POE & ASSOCIATES, OKLAHOMA CITY, OK

BENCHMARKS AND CHECKLEVELS

SWO 2923(1)

I-35 / I-240 INTERCHANGE OKLAHOMA COUNTY

NOTE: LEVEL DATUM FOR THIS SURVEY IS MEAN SEA LEVEL- (NGS), NGVD29-3RD ORDER OR BETTER.

STATION	ELEVATION RUN1	ELEVATION RUN2	ELEVATION RUN3	DIFF	RUN1	RUN2	RUN3	MEAN	UNADJUSTED ELEVATION	ADJUSTED ELEVATION	ELEVATION	DESCRIPTION
B.M. 59											1285.59	Chiseled square on concrete headwall approximately 600' S. of Ramada Inn along frontage road, taken from existing plans CL I-35 STA. 94+25.50 131.47' RT.
FIRESTONE	1300.29	1300.27		-0.02	14.7	14.68		14.69		1300.28	1300.28	Square on sidewalk at Firestone CL I-35 STA. 107+92.56 204.35' RT.
B.M. 1	1290.09	1290.08		-0.01	-10.19	-10.2		-10.195	1290.085	1290.09		X on curb NE of Arby's CL I-35 STA. 105+35.58 155.87' LT.
B.M.2	1284.54	1284.54		0	-5.545	-5.545		-5.545	1284.54	1284.54		#5 rebar at church
CHURCH												CL I-35 STA. 101+11.28 295.24' LT.
O-55-1837												
B.M.3	1279.75	1278.88		-0.87	-4.79	-5.66		-5.225	1279.315	1279.32		X on curb at 71st St. CL I-35 STA. 92+35.03 326.63' LT.
B.M.4	1282.01	1282.01		0	2.695	2.695		2.695	1282.01	1282.01		X on curb at 73rd St. CL I-35 STA.89+03.86 520.15' LT.
B.M.5	1282.4	1282.41		0.01	0.39	0.4		0.395	1282.405	1282.41		X on curb at center of inlet CL I-35 STA. 85+81.41 258.21' LT.
B.M.6	1265.29	1265.3		0.01	-17.115	-17.105		-17.11	1265.295	1265.3		Chiseled square top of east side of drainage canal CL I-240 STA. 418+91.16 406.13' LT.
B.M.7	1274.87	1274.87		0	9.575	9.575		9.575	1274.87	1274.88		X on curb at 73rd street CL I-240 412+45.47 323.22' LT.
B.M.8	1267.14	1267.14		0	-7.73	-7.73		-7.73	1267.14	1267.15		X on curb at 72nd street CL I-240 STA. 406+48.06 317.43' LT.
B.M.9	1270.89	1270.9		0.01	3.75	3.76		3.755	1270.895	1270.91		X on curb at inlet, SE of Home Depot CL I-240 STA. 399+94.10 175.60' LT.
B.M.10	1275.41	1275.43		0.02	4.515	4.535		4.525	1275.42	1275.43		X on curb at PI E & NW, S. of Valero gas station CL I-240 STA. 394+01.73 176.68' LT.
B.M.11	1265.35	1265.36		0.01	-10.07	-10.06		-10.065	1265.355	1265.37		X on curb
CIRCUIT CITY												CL I-240 STA. 391+00.77 453.49' LT.
O-55-1838												
B.M.12	1263.85	1263.86		0.01	-1.505	-1.495		-1.5	1263.855	1263.87		Square on curb at PI N & E SE of Payless Shoes CL I-240 STA. 385+73.15 152.24' LT.
B.M.13	1261.56	1261.57		0.01	-2.295	-2.285		-2.29	1261.565	1261.58		Square on traffic box east of Santa Fe CL I-240 STA. 379+06.84 136.04' LT.
B.M.14	1258.45	1258.45		0	-3.115	-3.115		-3.115	1258.45	1258.47		Square at NW corner of water vault, east of Santa Fa CL I-240 STA. 377+02.13 152.94' LT.
B.M.15	1257.84	1257.84		0	-0.61	-0.61		-0.61	1257.84	1257.86		X on curb at PI E & SW, NW of Batteries Plus CL I-240 STA. 377+33.76 157.07' RT.
B.M.16	1265.47	1265.47		0	7.63	763		7.63	1265.47	1265.49		X on curb at North end of Walmart parking lot CL I-240 STA. 383+25.73 148.89' RT.
B.M.17	1269.52											X on lightpole base 4th pole from west, north of Nissan dealership
B.M.18	1270.28	1270.3		0.02	4.81	4.83		4.82	1270.29	1270.31		X on east curb of 3rd entrance from west, north of Nissan dealership CL I-240 STA. 389+27.33 133.51' RT.
B.M.19	1278.59											X on curb at PI E & S at north end of Discount Tire parking lot
B.M.20	1280.87	1280.88		0.01	10.58	10.59		10.585	1280.875	1280.9		X on light pole base NNW of Enterprise CL I-240 STA. 395+58.73 155.12' RT.
B.M.21	1276.76	1276.78		0.02	-4.115	-4.095		-4.105	1276.77	1276.79		X on curb at PI N & W, west curb at west entrance to Saturn CL I-240 STA. 402+17.71 157.12' RT.
B.M.22	1275.43	1275.43		0	-1.34	-1.34		-1.34	1275.43	1275.45		X on headwall west side of Ford dealership CL I-240 STA. 408+36.59 271.68' RT.
B.M.23	1281.815	1281.81		-0.005	6.385	6.38		6.3852	1281.8125	1281.84		X on curb PI N & E at NW corner of Ford dealership building CL I-240 STA. 413+98.14 319.36' RT.
B.M.24	1282.385	1282.37		-0.015	0.5725	0.5575		0.565	1282.3775	1282.4		X on lightpole base on east side of Ford dealership building CL I-240 STA. 417+08.18 439.75' RT.
B.M.25	1278.215	1278.21		-0.005	-4.1625	-4.1675		-4.165	1278.2125	1278.24		#6 rebar east of creek bend CL I-240 STA. 421+35.01 620.62' RT.
B.M.26	1283.51	1283.52		0.01	5.2975	5.3075		5.3025	1283.515	1283.54		#6 rebar CL I-35 STA. 72+81.56 526.25' LT.
B.M.27	1289.24	1289.24		0	5.725	5.725		5.725	1289.24	1289.27		X on driveway, east of front door of Bodyworks, Inc. CL I-35 STA. 68+21.51 177.72' LT.
B.M.28	1290.73	1290.73		0	1.49	1.49		1.49	1290.73	1290.76		X on cub, east of Dept. of Corrections office CL I-35 STA. 65+16.94 136.00' LT.
B.M.29	1294.33											X on south curb, NE of Five Star Rig & Supply
B.M.30	1298.27	1298.25		-0.02	7.54	7.52		7.53	1298.26	1298.29		X on curb, east of Marshall Park parking lot CL I-35 STA. 59+00.05 154.01' LT.
B.M.31	1303.53											X on curb, east parking lot of Days Inn
B.M.32	1309.11	1309.1		-0.01	10.85	10.84		10.845	1309.105	1309.14		X on curb PI W & N, SSE of Days Inn CL I-35 STA. 53+66.62 230.16' LT.
B.M.33	1307.67	1307.65		-0.02	-1.435	-1.455		-1.445	1307.66	1307.69		#5 rebar
HOSPICE												CL I-35 STA. 53+30.60 629.22' LT.
O-55-1840												
B.M.34	1308.43	1308.46		0.03	0.77	0.8		0.785	1308.445	1308.48		X on curb, N of SE 82nd St. CL I-35 STA. 53+58.07 148.34' RT.
B.M.35	1297.2	1297.18		-0.02	-11.245	-11.265		-11.255	1297.19	1297.23		X on curb, east side of median on 80th St. Ice Rink CL I-35 STA. 59+58.93 348.75' RT.

PLS		
DRAWN		
CHECKED		
APPROVED		
CREW	POE	

POE & ASSOCIATES, OKLAHOMA CITY, OK
SURVEY DIVISION

SURVEY DATA SHEET

SWO 2923(1) PROJECT NO. 09032(7) SHEET NO. SD05

OKLAHOMA COUNTY

B.M. 36	1290.6	1290.59		-0.01	-6.59	-6.6		-6.595	1290.595	1290.63		Square on south curb
												return at SE 79th, NW of Ice Rink
												CL I-35 STA. 66+79.07 234.04' RT.
B.M.37	1292.93	1292.92		-0.01	2.335	2.325		2.33	1292.925	1292.96		X on north headwall at
												SW corner of OG&E yard
												CL I-35 STA . 67+15.69 865.26' RT.
B.M.38	1296.01	1295		-0.01	3.085	3.075		3.08	1296.005	1296.05		#6 rebar, 6' west of OG&E
												fence, 3rd light pole from north
												CL I-240 STA. 437+85.95 693.64' RT.
B.M.39	1300.34	1300.33		-0.01	4.335	4.325		4.33	1300.335	1300.38		X on west curb, east of
												lightpole at OG&E main parking lot
												CL I-240 STA. 446+25.79 262.04' RT.
B.M.40	1295.87	1295.85		-0.02	-4.465	-4.485		-4.475	1295.86	1295.9		Square on concrete
												footing at NNE fence
												corner of OG&E yard
												CL I-240 STA. 450+98.17 326.25' RT.
B.M.41	1280.47	1280.45		-0.02	-15.39	-15.41		-15.4	1280.46	1280.5		Square on concrete
												footing at NE fence
												corner of OG&E yard
												CL I-240 STA. 455+77.93 606.19' RT.
B.M.42	1270.94	1270.94		0	-9.52	-9.52		-9.52	1270.94	1270.98		#6 rebar at NW corner of
												fence and Budweiser property
												CL I-240 STA. 461+03.91 196.39' RT.
B.M.43	1259.74	1259.73		-0.01	-11.2	-11.21		-11.205	1259.735	1259.78		#6 rebar
												CL I-240 STA. 472+71.40 197.10' RT.
B.M.44	1278.31	1278.29		-0.02	18.575	18.555		18.565	1278.3	1278.35		#6 rebar
												CL I-240 STA. 478+53.14 372.48' RT.
B.M.45	1286.2	1286.18		-0.02	7.9	7.88		7.89	1286.19	1286.24		X on headwall, west of Eastern
												CL I-240 STA. 481+88.67 511.12 RT.

B.M.46	1297.7	1297.7		0	11.51	11.51		11.51	1297.7	1297.75		#5 rebar at Diamond Ballroom
DIAMOND												CL I-240 STA. 480+17.65 1980.08' RT.
O-55-1839												
B.M.45	1286.19	1286.2		0.01	-11.51	-11.5		-11.505	1286.195	1286.25		X on headwall, west of Eastern
												CL I-240 STA. 481+88.67 511.12 RT.
B.M.48	1268.63	1268.62		-0.01	-17.565	-17.575		-17.57	1268.625	1268.68		X on sign base, west of Eastern
												CL I-240 STA.479+00.40 312.21' LT.
B.M.49	1259.74	1259.73		-0.01	-8.885	-8.895		-8.89	1259.735	1259.79		Square on top curb, SE
												parking lot of "Heartwood"
												CL I-240 STA. 470+91.46 178.33' LT.
B.M.50	1269.68	1269.67		-0.01	9.945	9.935		9.94	1269.675	1269.73		Square on manhole
												CL I-240 STA. 464+22.30 147.47 LT.
B.M.51	1290	1290.01		0.01	20.325	20.335		20.33	1290.005	1290.06		X on curb Pl E & N
												CL I-240 STA. 453+21.36 317.36' LT.
B.M.52	1308.74	1308.77		0.03	18.735	18.765		18.75	1308.755	1308.81		X on curb, S. of lightpole
												E. of "MALL"
												CL I-240 STA. 445+65.52 308.74' LT.
B.M.53	1308.4	1308.42		0.02	-0.355	-0.335		-0.345	1308.41	1308.47		#5 rebar with cap
MALL												CL I-240 STA. 444+54.12 286.71' LT.
O-55-1841												
B.M.54	1300	1300.02		0.02	-8.41	-8.39		-8.4	1300.01	1300.07		X on curb at east parking
												lot of Texas Roadhouse
												CL I-240 STA. 439+31.47 209.30' LT.

B.M.56	1288.8	1288.82		0.02	-11.21	-11.19		-11.2	1288.81	1288.87		X on curb, south of
												Hibdon Tires Plus
												CL I-240 STA.433+68.62 541.94' LT.
B.M.57	1286.03	1286.03		0	-2.78	-2.78		-2.78	1286.03	1286.09		Square on top of headwall
												CL I-35 STA. 84+07.16 388.69' RT.
B.M.58	1289.4	1289.39		-0.01	3.37	3.36		3.365	1289.395	1289.46		X on curb of NW parking
												lot at Best Buy
												CL I-35 STA. 88+25.03 171.55' RT.
B.M.59	1285.56	1285.56		0	-3.835	-3.835		-3.835	1285.56	1285.62		Square on top of headwall
												CL I-35 STA. 94+25.50 13147' RT.
B.M.60	1295.68	1295.69		0.01	10.12	10.13		10.125	1295.685	1295.75		X on curb of west parking
												lot at Ramada Inn
												CL I-35 STA. 101+09.27 176.35' RT.
FIRESTONE	1300.22	1300.22		0	4.535	4.535		4.535	1300.22	1300.28	1300.28	Square on sidewalk at Firestone
												CL I-35 STA. 107+92.56 204.35' RT.

SDS 07 OF 46

PLS			POE & ASSOCIATES, OKLAHOMA CITY, OK SURVEY DIVISION
DRAWN			**SURVEY DATA SHEET**
CHECKED			
APPROVED			
CREW	POE		SWO 29231(1) PROJECT NO. 09032(17) SHEET NO. SD07

OKLAHOMA COUNTY

POE & ASSOCIATES, OKLAHOMA CITY, OK

COORDINATES

POINT NAME	NORTHING	EASTING	DESCRIPTION
504	145611.9996790	2148266.4140730	COGO
506	142972.3253440	2148283.0792870	COGO
1022	143095.2755021	2149393.7021930	COGO
1044	142332.6186671	2153644.4422758	COGO
1046	142202.1817155	2153570.3733778	COGO
1047	142176.1100374	2153718.0902272	COGO
1060	146336.8429785	2150804.6076882	COGO
1063	146371.2686553	2156534.0822654	COGO
1075	148068.1468087	2151061.5445917	COGO
1076	148285.8404	2151129.0452	COGO
1077	147212.3639	2150866.5764	COGO
1084	142998.6493000	2150824.6653000	COGO
1103	142996.3594000	2150824.6854000	COGO
1106	142997.2789000	2150921.6810000	COGO
1108	143080.9645000	2149516.7800000	COGO
1110	137720.1211000	2150967.8715000	COGO
1113	142908.7329000	2152103.9174000	COGO
1114	137741.7255788	2153604.2529799	COGO
1115	137730.9610749	2152290.6670853	COGO
1157	145654.2614000	2153554.6702000	COGO
1158	140333.2689000	2148302.8137000	COGO
1227	142980.1053000	2150921.8313000	COGO
1234	143085.7762000	2150024.3309000	COGO
1236	140221.1160000	2150051.4885000	COGO
1237	143046.6284000	2150524.2414000	COGO
1238	142944.5298000	2151134.4563000	COGO
1239	145770.0422000	2151607.2092000	COGO
1240	142905.3265000	2151627.7003000	COGO
1323	137519.4209520	2150872.6245422	COGO
1340	139019.3634940	2150859.4955498	COGO
1342	140019.3251888	2150850.7428963	COGO
1343	140164.9396108	2150849.4683349	COGO
1350	141019.2909597	2150841.9804370	COGO
1351	141519.2718074	2150837.6141518	COGO
1354	142019.2526552	2150833.2378665	COGO
1355	142519.2335030	2150828.8615813	COGO
1361	143519.2099033	2150821.5374945	COGO
1362	144019.2008779	2150818.5332824	COGO
1365	144519.1918526	2150815.5290702	COGO
1366	145019.1828272	2150812.5248580	COGO
1367	145519.1738018	2150809.5206458	COGO
1374	146019.1574427	2150806.5164597	COGO
2002	140358.8886930	2150944.9808600	COGO
2008	143016.2160130	2153569.9770520	COGO
2597	139619.3405109	2150854.2439577	COGO
3000	143333.6030708	2153381.4330393	COGO
3002	138270.2873765	2150963.1104757	COGO
3004	142594.6460508	2149933.8181041	COGO
3006	141697.3554499	2153578.5613684	COGO
3008	144693.3829653	2151592.4936368	COGO
3009	142210.8572100	2150291.6937337	COGO
3010	140378.4949950	2153587.1456840	COGO
3011	142688.3840237	2148819.3478677	COGO
3012	141636.0753683	2152550.7221760	COGO
3013	141778.3857108	2151757.3266501	COGO
3014	142687.2019373	2148694.3534571	COGO
3015	142708.7333957	2148681.6492727	COGO
3016	144756.5745657	2151199.1779980	COGO
3017	144630.8938715	2152091.0375352	COGO
3018	144617.8281014	2149032.0175988	COGO
3019	144828.8880584	2149252.2557280	COGO
3020	143377.9615083	2150164.9163007	COGO
3021	143377.4766294	2150166.5498250	COGO
3022	145857.5238094	2151899.6427839	COGO
3023	145448.9557042	2152431.7886520	COGO
3024	143391.0727474	2151726.2178107	COGO
3025	144476.6428873	2151975.8861107	COGO
3026	144214.1607808	2151281.7211066	COGO
3027	143453.6804149	2153064.4800356	COGO
3028	143327.5773890	2153375.2465369	COGO
3029	141757.4090468	2153039.4548281	COGO
3030	143194.6042331	2153522.7895904	COGO
3031	144211.0432632	2153098.0442135	COGO
3032	144261.3905192	2152620.8965659	COGO
3033	142743.8789367	2148261.0120488	COGO
3034	141756.9210286	2153037.4023054	COGO
3035	141646.9307728	2147849.5931637	COGO
3036	143423.5793892	2151128.8379725	COGO
3037	144361.2011329	2154527.8194461	COGO
3038	142735.5361120	2148261.6016704	COGO
3039	147213.8725296	2152980.5023452	COGO
3040	145638.9774980	2150905.8228450	COGO
3041	144386.1938470	2152493.0199174	COGO
3042	145423.6032108	2152791.8014682	COGO
3045	148296.8244480	2153543.9765170	COGO
3046	145669.7401110	2156206.9661630	COGO
3049	143034.9922310	2156217.6965760	COGO
3051	140395.1519620	2156230.2960210	COGO
3105	145578.6212470	2145619.0344230	COGO
3120	142947.5057340	2145642.3195790	COGO
3148	140307.6692360	2145664.2927180	COGO
3153	143788.6399325	2151322.8795422	COGO
3169	148284.7529460	2150889.9611330	COGO
3538	141277.9128020	2150313.7312458	COGO
3544	142161.8229449	2151448.3808990	COGO
3549	142316.8326322	2151611.9565352	COGO
5000	145195.9391152	2153557.3295445	COGO
5001	146961.5832969	2150991.0166781	COGO
5002	146337.8764257	2150976.6045835	COGO
5003	143101.9943726	2155105.3611674	COGO
5004	143350.2731501	2155106.1403233	COGO
5005	143573.9672364	2155116.6321937	COGO
5006	143574.0791720	2155136.6618809	COGO
5007	143349.7757555	2155126.1414312	COGO
5008	143104.6669625	2155125.3722235	COGO
5009	144027.1294398	2150964.5904804	COGO
5010	144732.9205869	2150963.3409986	COGO
5011	144594.8958405	2150962.1367261	COGO
5012	143180.6115900	2146314.5078000	COGO
5013	143183.9295200	2146664.4920800	COGO
5014	143394.9307088	2145688.3618627	COGO
5015	146747.5857953	2150972.3889748	COGO
5016	144628.9181168	2151136.9526915	COGO
5017	144627.9936181	2150962.6834177	COGO
5018	143967.3603024	2150968.9785444	COGO
5019	143349.6794500	2148335.5583700	COGO
5020	146270.4618729	2150977.1597989	COGO
5021	143041.0021810	2151721.6781510	COGO
5022	143042.3243076	2151906.5734240	COGO
5023	143042.4089695	2151918.4131213	COGO
5024	143077.7842818	2151941.8415694	COGO
5025	143846.7771040	2150977.5924912	COGO
5027	143237.6125300	2148251.1910800	COGO
5028	143252.7162779	2145689.6204488	COGO
5029	143200.3044185	2145739.3648413	COGO
5030	143198.5388000	2146921.9101400	COGO
5031	143228.9405700	2147173.2732600	COGO
5032	143274.8915100	2147204.7421200	COGO
5033	146310.4611541	2150976.9199888	COGO
5034	145652.9745916	2153331.6539124	COGO
5037	143231.9324370	2147515.9604216	COGO
5041	143230.6425000	2147515.9731700	COGO
5043	138750.5913776	2150706.8314144	COGO
5044	138270.7950379	2151025.0183942	COGO
5049	138420.8880292	2151014.8062659	COGO
5050	137833.2067237	2151054.7913235	COGO
5051	137781.2292993	2151080.3919278	COGO
5052	137784.4026957	2151467.3789167	COGO
5055	143324.5198000	2148310.6655400	COGO
5057	142665.4932120	2147559.5863536	COGO
5059	140421.0329098	2150658.7724851	COGO
5060	140381.6410965	2150194.8408728	COGO
5061	139255.9471299	2150717.6518224	COGO
5062	143619.6628179	2156140.3157108	COGO
5063	143224.5612300	2148311.2712700	COGO
5064	143214.6379500	2148321.3387200	COGO
5065	141518.1339531	2150707.6189643	COGO
5066	141628.1297395	2150706.6561657	COGO
5067	141634.6155652	2150686.5981391	COGO
5068	141684.6136990	2150686.1605029	COGO
5069	141693.0916995	2150706.0091977	COGO
5070	141967.2513033	2150688.3672210	COGO
5071	142856.7518009	2147342.4327993	COGO
5072	142679.9849299	2145694.5480382	COGO
5074	139720.9360939	2150703.5768060	COGO
5075	144832.9569272	2150966.9227517	COGO
5076	145511.3259485	2150659.5793858	COGO
5077	145389.3740144	2150975.2641940	COGO
5078	144292.6981259	2151136.9320680	COGO
5079	144825.7294900	2150646.6078300	COGO
5082	144885.7476200	2150643.8485400	COGO
5083	144896.8563400	2150654.3426700	COGO
5084	145006.0285300	2150663.3185800	COGO
5085	144819.6972097	2150967.0093082	COGO
5088	146335.9417150	2150654.6101588	COGO
5091	143279.2480641	2147355.9760812	COGO
5092	143235.2473592	2147415.2494341	COGO
5093	143872.5807430	2147160.4656652	COGO
5097	143216.4047700	2148507.7075600	COGO
5102	143226.4043200	2148507.6127600	COGO
5120	143226.9121100	2148561.1749700	COGO
5121	143227.3523000	2148607.6082700	COGO
5122	143217.3528200	2148607.7030700	COGO
5123	143220.5996400	2148632.1302100	COGO
5124	143229.1192300	2148696.2264900	COGO
5125	143237.5799300	2148759.8796800	COGO
5126	143246.1008800	2148823.9861400	COGO
5127	143254.9089000	2148890.2524200	COGO
5128	143264.0355700	2148958.9159900	COGO
5129	143268.6813100	2148993.8677600	COGO
5130	143275.5027100	2149045.1878600	COGO
5131	143567.5515500	2149868.0379800	COGO
5132	145591.1178695	2150627.8966295	COGO
5133	143587.0598000	2149863.3581300	COGO
5134	143619.7569800	2149988.4989600	COGO
5135	143819.9845200	2150219.1127300	COGO
5136	143903.9258000	2150299.7017800	COGO
5137	144822.8655600	2150649.6327500	COGO
5138	143954.3085800	2150342.1222100	COGO
5139	144213.9033800	2150507.0432000	COGO
5140	144264.0095100	2150513.9661800	COGO
5141	144346.6531000	2150547.8060000	COGO
5142	144399.4373300	2150547.2891900	GOGO
5143	144399.4824900	2150551.9013600	COGO
5144	144534.5711000	2150550.5787100	GOGO
5145	144585.3693300	2150628.2632600	GOGO
5146	145021.4953800	2150662.6075100	COGO
5147	145101.0885300	2150662.1292700	COGO
5148	145125.8610200	2150636.9903500	COGO
5149	145411.3278801	2150660.2009369	COGO
5150	145296.3301015	2150660.9157205	COGO
5151	145201.3319366	2150661.5061940	COGO
5152	145175.8602216	2150636.6640339	COGO
5153	145436.0827929	2150635.0465865	COGO
5154	145486.0821466	2150634.7358091	COGO
5155	142675.5064200	2153890.5436100	COGO
5156	142310.5108400	2153892.3404100	COGO
5157	142311.5131000	2154095.9348500	COGO
5158	143233.5541516	2147812.6229438	COGO
5159	142399.8988945	2156168.0671534	COGO
5160	142399.7204990	2156130.7275795	COGO
5161	142720.2988370	2155473.9501174	COGO
5162	141439.8981672	2154100.2944145	COGO
5163	141455.0006285	2156229.9608659	COGO
5164	142724.5349862	2154315.6837837	COGO
5165	142247.9006257	2156168.7926116	COGO
5166	142722.9622800	2154093.9093600	COGO
5169	143400.2046380	2156141.2094878	COGO
5171	142430.2484253	2153573.7910497	COGO
5172	137757.4036035	2151467.6003165	COGO
5174	142314.8008708	2153574.5424850	COGO
5175	142242.2923576	2153702.2315648	COGO
5176	142329.2503254	2153751.6108301	COGO
5177	142129.2545618	2153752.9125803	COGO
5178	141927.0890835	2153577.0660577	COGO
5179	140377.7529610	2153487.1484371	COGO
5180	141926.3470495	2153477.0688109	COGO
5181	141926.4583546	2153492.0683979	COGO
5182	142295.0218982	2150631.5265091	COGO
5183	142807.6954646	2150159.1444392	COGO
5184	141335.1969576	2150709.3501873	COGO
5185	142174.6769012	2150650.4046656	COGO
5188	142673.9434497	2153672.0398902	COGO
5189	142523.9466490	2153673.0195824	COGO
5190	144212.0372224	2151207.5278813	COGO
5191	143763.8441716	2150983.6856448	COGO
5192	143546.3945942	2151084.1652237	COGO
5193	143417.8619013	2151214.5958745	COGO
5194	143375.6439254	2151243.1903234	COGO
5195	143136.8135592	2151485.5473406	COGO
5196	142523.2313632	2153573.0221213	COGO
5197	142598.1489710	2153075.5602743	COGO
5198	142681.9785784	2145894.5350981	COGO
5199	142731.7628260	2152528.1469347	COGO
5200	142837.2694814	2145693.2388528	COGO
5202	141213.9877237	2151125.1607396	COGO
5203	142694.9844103	2145694.4231874	COGO
5204	140291.9070096	2151053.0000391	COGO
5205	142527.9901952	2145695.8131928	COGO
5206	139941.5427490	2150692.5337405	COGO
5207	140391.6407066	2150194.7525652	COGO
5208	142725.1883854	2151609.0355502	COGO
5209	142613.2479979	2151331.0635231	COGO
5210	142458.2383106	2151167.4878869	COGO
5211	142158.2486321	2151040.0303418	COGO
5212	141772.1367137	2151043.4099986	COGO
5213	141544.5271730	2151082.7703370	COGO
5214	138720.5128300	2150992.1163052	COGO
5215	143372.9096774	2155922.6774809	COGO
5216	138720.7836565	2151002.2016679	COGO
5217	138620.8730321	2151013.0698385	COGO
5218	139606.6727610	2150984.3599835	COGO
5219	144395.4760149	2150946.2745629	COGO
5220	144395.5360975	2150956.2743824	COGO
5221	141544.5271730	2151082.7703370	COGO
5222	144422.5356101	2150956.1121593	COGO
5223	139722.4848176	2150993.3467132	COGO
5224	140247.6965094	2151034.1018439	COGO
5225	143165.7353009	2155580.5097183	COGO
5226	143057.7117510	2154767.4846624	COGO
5227	143052.8786576	2154086.3461485	COGO
5228	140329.8333791	2151056.3010338	COGO
5229	143845.0725645	2150982.7312754	COGO
5230	143764.2480731	2150988.6723848	COGO
5231	143667.3180307	2151024.9549020	COGO
5232	143876.4486940	2151044.0261426	COGO
5233	142155.4535039	2153490.5778940	COGO
5234	145724.2997557	2150658.2852292	COGO
5235	145714.3476126	2150974.4124357	COGO
5236	144969.2943649	2150962.6651895	COGO
5238	145641.0645490	2151271.5941165	COGO
5239	145704.2611724	2150975.0029544	COGO
5240	145640.8750059	2151238.8028561	COGO
5241	145650.8750690	2151238.7427505	COGO
5242	142156.0842328	2153575.5755539	COGO
5243	142904.7458555	2149934.1661172	COGO
5244	142905.8654051	2149922.4494834	COGO
5245	142634.0688271	2150324.8652622	COGO
5246	142174.8441901	2150668.0938746	COGO
5247	142905.6354699	2147276.5718298	COGO
5248	142895.8657950	2149922.5377908	COGO
5249	142894.7462454	2149934.2544247	COGO
5250	145674.1609169	2150643.5962590	COGO
5251	145661.5789597	2150365.6755357	COGO
5252	145671.5782387	2150365.6154547	COGO
5253	145679.2004848	2150648.5560292	COGO
5254	146269.6134660	2150977.0151749	COGO
5255	146309.6127440	2150976.7748445	COGO
5256	146927.1454571	2150987.2885471	COGO
5257	146929.6383669	2150962.4131496	COGO
5258	146986.0497322	2150993.5079175	COGO
5259	142953.8400002	2149818.0217805	COGO
5260	146943.4114240	2150988.9427243	COGO
5261	146963.4114600	2150991.0427764	COGO
5262	146914.9926572	2150699.7855171	COGO
5264	142923.8411700	2149818.2867029	COGO
5265	146992.3903405	2150678.7295025	COGO
5266	148209.3180116	2150857.3636665	COGO
5267	148234.0243649	2150832.2151752	COGO
5268	148236.7298925	2151337.8561292	COGO
5269	148156.7307107	2151338.2179386	COGO
5270	148159.1041458	2151863.0049411	COGO
5271	148388.5907009	2151748.9577395	COGO
5272	148386.8078804	2151354.7607387	COGO
5273	142924.8246658	2149922.2820524	COGO
5274	147850.6264440	2151823.0362075	COGO
5275	142877.9350822	2149722.6883673	COGO
5276	142878.1242160	2149742.6874730	COGO
5277	147851.7842673	2152015.7327213	COGO
5278	148634.3109753	2150854.7166337	COGO
5279	148317.3173169	2150856.7059827	COGO
5280	142953.1212916	2149742.0251671	COGO
5281	142571.5005869	2150385.6671916	COGO
5282	142538.1585716	2150452.9915988	COGO
5283	142468.1323612	2150529.1374251	COGO
5284	142920.8501628	2146317.5099141	COGO
5285	143352.8750226	2154084.8693206	COGO
5286	142700.1145914	2148049.1937343	COGO
5287	140393.5790442	2150394.6531678	COGO
5288	153639.4262333	2153486.2481954	COGO
5289	142800.9302778	2150151.7801845	COGO
5290	141335.1496742	2150704.3504109	COGO
5291	141631.0905130	2150273.7203256	COGO
5292	141233.8636237	2150705.2448771	COGO
5293	140394.2612927	2150465.9899055	COGO
5294	140680.2153683	2150673.3927638	COGO
5295	141233.7747538	2150695.1219327	COGO
5296	141335.0551073	2150694.3508581	COGO
5297	142917.9884857	2147822.2609349	COGO
5298	142889.9734847	2145742.7466717	COGO
5299	142898.1110913	2145892.7360829	COGO
5300	141035.0346520	2150693.6002337	COGO
5301	142619.4528365	2150324.9943373	COGO
5302	140277.8841816	2151047.0058490	COGO
5303	139606.5423492	2150994.9113802	COGO
5305	141616.2748500	2145860.4074819	COGO
5306	141638.0210248	2145703.2210063	COGO
5307	142126.0314287	2150656.0330675	COGO
5308	141673.2728755	2145859.9330493	COGO
5309	141673.3894028	2145873.9325643	COGO
5310	142166.3723253	2145869.8291384	COGO
5311	142564.3723579	2147438.7516661	COGO
5312	141645.0697105	2146453.1878829	COGO
5313	142912.0843762	2147677.3415860	COGO
5314	142908.3872446	2147587.6677675	COGO
5315	142912.2648860	2147092.6623043	COGO
5316	142727.2211872	2147539.0001347	COGO
5317	142906.0037790	2147529.8568802	COGO
5318	142856.1063857	2147496.0170481	COGO
5319	142919.4549223	2146892.5956441	COGO
5320	142924.5315929	2146709.2071424	COGO
5321	143763.3314694	2147807.7205430	COGO
5322	143763.5396688	2147830.2195797	COGO
5323	143748.5403110	2147830.3583793	COGO
5324	143748.4709112	2147822.8587003	COGO
5325	143483.4822566	2147825.3108261	COGO
5326	143483.5516564	2147832.8105050	COGO
5327	143468.5522986	2147832.9493046	COGO
5328	143468.4828988	2147825.4496257	COGO
5329	143748.4709112	2147822.8587003	COGO
5330	143525.9243113	2148279.5842175	COGO

SDS 08 OF 46

PLS		
DRAWN		
CHECKED		
APPROVED		
CREW	POE	

POE & ASSOCIATES, OKLAHOMA CITY, OK
SURVEY DIVISION

SURVEY DATA SHEET

SWO 2923(1) PROJECT NO. 09032(17) SHEET NO. SD08

OKLAHOMA COUNTY

POE & ASSOCIATES, OKLAHOMA CITY, OK

COORDINATES

POINT NAME	NORTHING	EASTING	DESCRIPTION
5331	145195.9421199	2153557.8049075	COGO
5332	143525.3691130	2148219.5867863	COGO
5333	143638.9220594	2148278.8708221	COGO
5334	144748.3220126	2153781.3588275	COGO
5335	143638.3668611	2148218.8733908	COGO
5336	143452.4357759	2148280.0481771	COGO
5337	143451.8592266	2148219.0709027	COGO
5338	143793.0339764	2148215.8450441	COGO
5339	143808.5055843	2148200.0780707	COGO
5340	143806.7848238	2148018.0862056	COGO
5341	143791.0178505	2148002.6145977	COGO
5342	143789.3277231	2147823.8625653	COGO
5343	143723.2241854	2147515.4675552	COGO
5344	143394.2258402	2147516.5110372	COGO
5345	143182.8040791	2146250.4746093	COGO
5346	144052.3410568	2146242.7792785	COGO
5347	144058.5659490	2146946.1634531	COGO
5348	141190.3998443	2151123.3147864	COGO
5349	141205.4039688	2151124.4889874	COGO
5350	141206.7818375	2151440.6759852	COGO
5351	141597.5781269	2151438.9729867	COGO
5352	141597.6434928	2151453.9728443	COGO
5353	141256.8467286	2151455.4579566	COGO
5354	141257.1408750	2151522.9573157	COGO
5355	141242.1410174	2151523.0226815	COGO
5356	141241.8468710	2151455.5233224	COGO
5357	141191.8473458	2151455.7412086	COGO
5358	141024.6865171	2151110.3463015	COGO
5359	140363.9695484	2151629.6820089	COGO
5360	141025.8114311	2151626.4040733	COGO
5361	141025.8857214	2151641.4038893	COGO
5362	140364.0838382	2151644.6816268	COGO
5363	141026.2921436	2151356.9710749	COGO
5364	141011.2922861	2151357.0364408	COGO
5365	141012.3689536	2151522.4129361	COGO
5367	141662.6750085	2152256.3259967	COGO
5368	141657.4290973	2151524.7648052	COGO
5369	141025.0970591	2151527.9379678	COGO
5370	141025.0280412	2151512.9381266	COGO
5371	141682.3260706	2151511.3286399	COGO
5372	140390.8699269	2151211.8749272	COGO
5373	140532.8681854	2151211.1716457	COGO
5374	140533.0507999	2151235.7809682	COGO
5375	140523.0509226	2151235.8304951	COGO
5376	140522.9425114	2151221.2208973	COGO
5377	140390.9441304	2151221.8746519	COGO
5378	140389.7478984	2151060.6569253	COGO
5379	140361.7854455	2151335.3501124	COGO
5380	140442.0444611	2151334.9526098	COGO
5381	140441.9701708	2151319.9527938	COGO
5382	140361.7411548	2151320.3501478	COGO
5387	142278.6861239	2153574.7776946	COGO
5388	142301.7711468	2153574.6272940	COGO
5389	142478.6526130	2153263.1351576	COGO
5390	142461.2610195	2153253.2593046	COGO
5392	141191.8995994	2151467.7415211	COGO
5393	141192.0341911	2151498.6512281	COGO
5394	141288.9529282	2151527.3200842	COGO
5395	141012.4355496	2151528.5241380	COGO
5396	141011.8835734	2151443.6959339	COGO
5397	141036.8179595	2151468.4141152	COGO
5398	140380.2500496	2153865.6401539	COGO
5399	141699.8804232	2153860.5996593	COGO
5400	142658.3034318	2153856.9388417	COGO
5401	142659.4268293	2153891.9408185	COGO
5402	142639.4269752	2153892.0172104	COGO
5403	142638.9454733	2153877.0149354	COGO
5404	141700.0123226	2153880.6013090	COGO
5405	141349.8829764	2153861.9365187	COGO
5406	141350.0090126	2153881.9361215	COGO
5407	140380.3760859	2153885.6397568	COGO
5408	142214.7745409	2153687.3273923	COGO
5409	142236.2843651	2153689.9509508	COGO
5410	142282.1029280	2153853.1822925	COGO
5411	142261.3630793	2153853.2615110	COGO
5412	145316.9981000	2150960.5779189	COGO
5413	145389.3122762	2150964.5643721	COGO
5414	144422.4742876	2150960.6323398	COGO
5415	144222.4791375	2150947.3139918	COGO
5416	145570.0514836	2150649.2117103	COGO
5417	143960.3344786	2151207.5771314	COGO
5418	143945.8745525	2151025.0221317	COGO
5419	145586.8394742	2150207.7490928	COGO
5420	144969.3596805	2150973.9850011	COGO
5421	145549.3587185	2150994.4569076	COGO
5422	145534.2973169	2150983.5770831	COGO
5423	143317.6347944	2151316.3029691	COGO
5424	143873.9972732	2151007.7915054	COGO
5425	143346.1736170	2151344.3303564	COGO
5426	139721.0233103	2150713.5764256	COGO
5427	144969.2758917	2150982.6943856	COGO
5428	140279.5054111	2150660.2256794	COGO
5429	140295.9625759	2150643.7681562	COGO
5430	143088.3314945	2152001.5753906	COGO
5431	143065.0601306	2152037.0494529	COGO

COORDINATES

POINT NAME	NORTHING	EASTING	DESCRIPTION
5432	143128.3169824	2152341.9772921	COGO
5433	143128.5721120	2152377.6563799	COGO
5434	143203.9219445	2152694.4589476	COGO
5435	143241.9989458	2152960.1664506	COGO
5436	143252.1153640	2153129.0641894	COGO
5437	143194.7025299	2153459.4122732	COGO
5438	143162.6445660	2153569.1274229	COGO
5439	143135.0557123	2153663.5412995	COGO
5440	143136.5811990	2153876.8758454	COGO
5441	142942.7443351	2148650.3113661	COGO
5442	142927.7450091	2148650.4535631	COGO
5443	142928.5033935	2148730.4499684	COGO
5444	142943.5027195	2148730.3077713	COGO
5445	142919.6434066	2147997.2531097	COGO
5446	142920.1162411	2148047.2508739	COGO
5447	142920.8254929	2148122.2475203	COGO
5448	142937.8247327	2148122.0867565	COGO
5449	145653.0123846	2153338.2038034	COGO
5450	142127.9074839	2150672.6776738	COGO
5451	140395.8743314	2150632.3420852	COGO
5452	139329.6324393	2150517.0252625	COGO
5453	144085.3846317	2154018.9631818	COGO
5454	143667.2971195	2155650.4067345	COGO
5455	143702.2968292	2155650.2641929	COGO
5456	143699.7176397	2155016.9694449	COGO
5457	143792.8307094	2154393.2312156	COGO
5458	143991.9497703	2154082.1033131	COGO
5459	140289.9351225	2150649.7957408	COGO
5460	139330.8332164	2150702.0213655	COGO
5461	139345.9248702	2150716.8480233	COGO
5463	139941.4456915	2150682.5242110	COGO
5464	139335.8353271	2150706.9356436	COGO
5465	138811.5203036	2150699.9957734	COGO
5466	139269.6544271	2150517.6389448	COGO
5467	139270.8545551	2150702.5350499	COGO
5468	139250.9828635	2150722.6858028	COGO
5469	139040.9939407	2150724.5078246	COGO
5470	139040.9614872	2150719.5079299	COGO
5471	138811.5874818	2150706.4754252	COGO
5472	138821.1365559	2150716.1703994	COGO
5473	138898.3193674	2150725.7522280	COGO
5474	138878.2876746	2150720.9267661	COGO
5475	138826.5194976	2150699.8402685	COGO
5476	138857.2357665	2150715.8555431	COGO
5477	138826.7424916	2150721.3491126	COGO
5478	138748.6676784	2150521.2813862	COGO
5480	137767.8099526	2150625.2457579	COGO
5481	138740.7605118	2150716.9947642	COGO
5483	137768.3854709	2150680.0397355	COGO
5484	137790.5399785	2150694.7885987	COGO
5485	138418.5436530	2150699.5313714	COGO
5486	138091.0814080	2150697.0583307	COGO
5487	138718.7079535	2150716.9624241	COGO
6000	142911.2208020	2156218.2873130	COGO
6001	143060.4394888	2147351.7472887	COGO
6002	143044.2256038	2145641.4636161	COGO
6003	142963.8700675	2147383.4538045	COGO
6004	143069.2629298	2148282.4672851	COGO
6005	142919.2241992	2153570.6083609	COGO
6006	143069.2629298	2148282.4672851	COGO
6007	145637.9858814	2150808.8067868	COGO
6008	140357.9461760	2150847.7791607	COGO
6009	139019.3634951	2150859.4956665	COGO
6010	139619.3405124	2150854.2441163	COGO
6011	143053.3885	2146607.9927	COGO
6012	143078.0171	2149205.8767	COGO
6013	142912.3093	2152603.9033	COGO
6014	142925.7294	2154895.1791	COGO
6015	142899.5246	2157103.6932	COGO
6016	142319.2379	2150830.6122	COGO
6017	141319.2750	2150839.3647	COGO
6019	138444.3850	2150864.5284	COGO
6020	143874.1949	2150819.4046	COGO
6021	144869.1766	2150813.4262	COGO
6022	145719.1629	2150808.3191	COGO
6051	142911.1942648	2156220.2961829	COGO
6052	142887.4440979	2158018.1858307	COGO
6105	142924.5263286	2154311.8497422	COGO
6106	85630.2125697	2154721.6782651	COGO
6107	142920.9935309	2155478.4909044	COGO
6236	142918.7468999	2153503.8815852	COGO
6240	143061.9203292	2147507.9502696	COGO
6241	143066.6602320	2148007.9278024	COGO
6244	143080.8799401	2149507.8604008	COGO
6247	142911.6985623	2152518.5190582	COGO
6248	142915.5281143	2153053.8930971	COGO
6249	142916.6010428	2153203.8892598	COGO
6329	142922.3233285	2154003.8687942	COGO
6330	144705.3631	2147894.3847	COGO
6331	145333.9250	2150686.2378	COGO
6332	145879.4980	2150682.7797	COGO
6333	146350.9383	2152647.9948	COGO
6334	146730.2164	2152778.6543	COGO
6335	148013.5352	2149617.4112	COGO
6336	141635.9753	2152550.5827	COGO
6337	141758.6676	2153035.4672	COGO

COORDINATES

POINT NAME	NORTHING	EASTING	DESCRIPTION
6338	142636.2127	2153220.4953	COGO
6339	143969.1590	2152010.9390	COGO
6340	143825.3560	2153985.6026	COGO
6341	142160.7894	2151448.3809	COGO
6342	142086.8279	2151762.2348	COGO
6343	142316.8366	2151613.0514	COGO
6344	141777.3488	2151757.3359	COGO
6345	141276.8667	2150313.7137	COGO
6346	142152.6115	2151467.6655	COGO
6347	143048.5302	2153403.2231	COGO
6348	143996.5493	2155268.9482	COGO
6349	142356.8091	2156248.1404	COGO
6350	142356.3688	2156204.0793	COGO
6351	144024.0236	2157134.8758	COGO
6352	141575.0705	2155118.8580	COGO
6353	143111.2203	2156217.7372	COGO
6354	143111.2203	2156217.7369	COGO
6355	142116.0911	2157104.4352	COGO
6356	139971.4863	2157235.2368	COGO
6357	143162.9737	2155832.6137	COGO
6358	143685.2239	2155512.6455	COGO
6359	145828.5173	2155361.8719	COGO
6360	154407.8474	2154340.0543	COGO
6361	143178.2003	2156598.5347	COGO
6362	141323.4077	2151161.3296	COGO
6363	141530.1914	2148081.6214	COGO
6364	143557.1717	2150021.8780	COGO
6365	143831.6717	2150294.2506	COGO
6366	144280.8280	2147813.3011	COGO
6367	144457.3315	2148774.4629	COGO
6368	144754.1149	2152861.1195	COGO
6369	144463.4872	2152847.1203	COGO
6370	144228.5790	2153800.5872	COGO
6371	143781.6644	2151319.8448	COGO
6372	143386.1797	2151731.2842	COGO
6373	143149.0025	2151058.6356	COGO
6374	143254.8219	2150732.2986	COGO
6375	143853.0170	2150050.4593	COGO
6376	143086.1216	2150535.1661	COGO
6377	143174.8210	2150912.1527	COGO
6379	143000.1760	2151061.5983	COGO
6380	142993.4835	2150587.3819	COGO
6382	142818.6217	2150736.7371	COGO
6383	142905.4273	2151113.6508	COGO
6385	142736.7179	2150916.7058	COGO
6386	141373.8091	2148885.4535	COGO
6387	141719.5534	2152690.2911	COGO
6388	141705.2404	2148870.5520	COGO
6389	142147.9451	2152023.8957	COGO
6390	142225.4172	2150389.1222	COGO
6391	142668.8542	2149965.2011	COGO
6392	143029.9289	2149986.5130	COGO
6393	142935.9859	2150209.0654	COGO
6394	142456.5707	2150667.2820	COGO
6395	142253.5445	2150749.6963	COGO
6396	143502.3189	2150054.8726	COGO
6397	144568.1126	2148510.0755	COGO
6398	143997.7548	2152360.4853	COGO
6399	143863.7661	2150378.9305	COGO
6400	143186.1800	2145640.2073	COGO
6401	142892.2896	2145642.7792	COGO
6402	143544.2060	2145637.0388	COGO
6403	143226.0743	2150585.9477	COGO
6404	142899.5886	2150825.5324	COGO
6405	142912.6797	2147400.2609	COGO
6406	145028.9717	2148594.8264	COGO
6407	141108.2377	2148751.6362	COGO
6408	142773.4435	2148446.5523	COGO
6409	146714.9196	2153796.2929	COGO
6410	147475.6452	2152504.9640	COGO
6411	146327.8591	2156409.6023	COGO
6412	147889.7540	2150303.2960	COGO
6413	145064.6501	2152580.1324	COGO
6414	146261.2704	2152572.9425	COGO
6415	145267.2329	2152862.9281	COGO
6416	143044.2284	2145641.7541	COGO
6417	143039.5414	2145147.3663	COGO
6418	143535.4895	2147195.7747	COGO
6419	142585.3894	2147507.7199	COGO
6420	146085.8607	2152857.9894	COGO
6421	145637.1605	2149823.2400	COGO
6422	142911.6986	2152518.5215	COGO
6423	142411.2265	2156220.6737	COGO
6424	143411.2163	2156216.1644	COGO
6425	142922.1862	2153984.6953	COGO
6426	142728.6774	2153986.9254	COGO
6427	143006.8555	2153981.6622	COGO
6428	145315.0154	2153385.4855	COGO
6429	145652.3227	2153218.6758	COGO
6430	142754.6198	2148259.8208	COGO
6431	145641.3027	2151308.7961	COGO
6432	148281.8565	2150629.0492	COGO
6433	148288.1146	2151629.0400	COGO
6434	145632.8756	2150308.8319	COGO
6435	140344.3985	2150347.8788	COGO
6436	140349.2465	2150847.8553	COGO
6437	140350.1890	2150945.0567	COGO
6438	140353.1779	2151347.8356	COGO
6439	143196.6485	2147307.0260	COGO
6440	142919.8975	2146017.2679	COGO
6441	146035.8817	2146140.7062	COGO
6442	142927.5220	2146200.7356	COGO
6443	142932.4847	2146724.2120	COGO
6444	143003.5201	2145936.2304	COGO
6445	142930.3397	2146893.4365	COGO

COORDINATES

POINT NAME	NORTHING	EASTING	DESCRIPTION
6446	148896.1183	2146580.1776	COGO
6447	148910.2031	2148050.6230	COGO
6448	139112.9373	2146760.4221	COGO
6449	140062.8618	2146227.8930	COGO
6450	141093.7469	2145954.3356	COGO
6451	142990.4184	2146178.3862	COGO
6452	142969.9626	2146351.5522	COGO
6453	142758.4442	2146326.5660	COGO
6454	142959.2697	2146397.5127	COGO
6455	142955.4924	2146408.2051	COGO
6456	145014.8410	2146186.8730	COGO
6457	143318.5936	2146531.7898	COGO
6458	143171.2215	2146167.8638	COGO
6459	143166.7977	2146634.4928	COGO
6460	143172.6818	2146045.3005	COGO
6461	143174.3079	2146878.4222	COGO
6462	140081.9633	2148245.2132	COGO
6463	143105.0679	2146204.9783	COGO
6464	143118.0314	2146409.7514	COGO
6465	143134.9073	2146553.3733	COGO
6466	143145.4053	2146596.6924	COGO
6467	143149.3848	2146607.3112	COGO
6468	143182.2355	2147914.7851	COGO
6469	143180.8825	2148104.9383	COGO
6470	143199.0877	2150025.2720	COGO
6471	142944.0411	2148120.6085	COGO
6472	142946.6236	2148218.0553	COGO
6473	142962.8080	2149925.2285	COGO
6474	140353.3134	2151822.6457	COGO
6475	142973.9626	2148359.2990	COGO
6476	142977.9419	2148369.9178	COGO
6477	142989.6984	2148416.1175	COGO
6478	142999.4593	2148485.4740	COGO
6479	143018.0109	2148733.5312	COGO
6480	140921.9258	2148810.9059	COGO
6481	143155.8771	2148209.8436	COGO
6482	143152.0997	2148220.5360	COGO
6483	143142.4251	2148264.0464	COGO
6484	143128.2763	2148407.9626	COGO
6485	143119.1986	2148612.9316	COGO
6486	140944.7777	2149336.5777	COGO
6487	140938.6419	2150720.6918	COGO
6488	140713.7420	2150709.3845	COGO
6489	140478.2238	2150683.5580	COGO
6490	140244.5917	2150681.8990	COGO
6491	140621.3541	2150716.9423	COGO
6492	140940.9273	2150964.6807	COGO
6493	140716.2041	2150979.9301	COGO
6494	140481.1849	2151009.8808	COGO
6495	140247.6679	2151015.6398	COGO
6496	140336.3215	2149873.1583	COGO
6497	140957.6433	2152874.4666	COGO
6498	143326.4878	2148282.1422	COGO
6499	140853.7929	2150766.0791	COGO
6500	140788.6398	2150760.4364	COGO
6501	140618.6290	2150741.7933	COGO
6502	140606.5685	2150737.1013	COGO
6503	140595.8439	2150729.2354	COGO
6504	145636.5344	2150666.8028	COGO
6505	145053.1750	2150670.3079	COGO
6506	144976.8538	2150672.2925	COGO
6507	146249.7950	2150663.1180	COGO
6508	146410.5411	2150668.9258	COGO
6509	141652.2095	2147849.5462	COGO
6510	142223.0052	2150307.7366	COGO
6511	144561.4456	2150771.7757	COGO
6512	144566.1155	2150771.7476	COGO
6513	144868.2658	2150754.5384	COGO
6514	144984.3001	2150745.5617	COGO
6515	145336.3593	2150711.1190	COGO
6516	145346.5547	2150707.8130	COGO
6517	145359.0769	2150700.4826	COGO
6518	142844.6079	2150590.1194	COGO
6519	145854.8320	2150697.5039	COGO
6520	145867.1285	2150704.5051	COGO
6521	145878.0604	2150707.7383	COGO
6522	146460.7450	2150741.2951	COGO
6523	146623.4523	2150757.6780	COGO
6524	146735.2762	2150773.7989	COGO
6525	142765.5493	2151062.6006	COGO
6526	144879.2844	2150955.3656	COGO
6527	145255.7576	2150953.1036	COGO
6528	142604.7240	2149928.6225	COGO
6529	146065.6982	2150948.2369	COGO
6530	146330.9734	2150946.6430	COGO
6531	146608.2221	2150939.5305	COGO
6532	145375.5421	2150956.1427	COGO
6533	145572.1751	2150967.3119	COGO
6534	145704.0021	2150967.2049	COGO
6535	145965.7557	2150951.9107	COGO
6536	146775.6707	2150697.5511	COGO
6537	147688.3138	2150843.8834	COGO
6538	147753.7085	2150859.8681	COGO
6539	147893.1966	2150876.2437	COGO
6540	148284.5745	2150873.8921	COGO
6541	148286.6956	2151317.0767	COGO
6542	148171.3450	2151252.8640	COGO
6543	147804.6215	2151110.8596	COGO

PLS			POE & ASSOCIATES, OKLAHOMA CITY, OK SURVEY DIVISION
DRAWN			SURVEY DATA SHEET
CHECKED			
APPROVED			
CREW	POE		SWO 292XII PROJECT NO. 09032X(17) SHEET NO. SD09

SDS 09 OF 46

OKLAHOMA COUNTY

COORDINATES

POINT NAME	NORTHING	EASTING	DESCRIPTION
6544	147377.2992	2151009.1314	COGO
6545	146697.9714	2150931.5540	COGO
6546	143028.0889	2151733.8449	COGO
6547	147672.0887	2151053.6550	COGO
6548	147544.7967	2151017.2920	COGO
6549	147342.6575	2150949.6074	COGO
6550	147336.6247	2150967.6242	COGO
6551	146912.5656	2150877.5204	COGO
6552	144545.1966	2150685.7864	COGO
6553	141677.2836	2150714.2265	COGO
6554	141973.4268	2150696.2709	COGO
6555	144298.1055	2150688.7962	COGO
6556	144468.7364	2150687.7709	COGO
6557	142263.1581	2150663.5783	COGO
6558	143304.9437	2150276.0760	COGO
6559	143579.4435	2150548.4484	COGO
6560	143787.3969	2150649.6031	COGO
6561	143925.3006	2150666.7851	COGO
6562	144752.2538	2150951.2604	COGO
6563	144579.0617	2150940.7605	COGO
6564	144452.0120	2150937.2948	COGO
6565	144211.3663	2150935.8489	COGO
6566	144020.0781	2150943.3946	COGO
6567	143755.6014	2150962.6946	COGO
6568	143526.5975	2151068.4955	COGO
6569	143131.1121	2151479.9357	COGO
6570	142915.2749	2153018.4940	COGO
6571	142914.0589	2152848.4984	COGO
6572	142784.0622	2152849.4282	COGO
6573	142865.0040	2153749.7223	COGO
6574	142480.9001	2153383.2928	COGO
6575	142861.2069	2153218.8859	COGO
6576	142852.0661	2150187.5772	COGO
6577	142632.4452	2153116.4276	COGO
6578	142781.8660	2152542.3861	COGO
6579	142681.2611	2153020.1679	COGO
6580	143240.2173	2153074.9912	COGO
6581	143152.3521	2152704.7340	COGO
6582	143040.1733	2153754.4171	COGO
6583	143190.9323	2153016.5222	COGO
6584	143132.7351	2153440.0404	COGO
6585	143049.0327	2152231.4286	COGO
6586	142775.1949	2151609.7699	COGO
6587	143014.2534	2152017.7663	COGO
6588	143012.8229	2151817.7714	COGO
6589	142470.3461	2150566.6923	COGO
6590	143006.8669	2153991.4573	COGO
6591	142973.5321	2153403.7572	COGO
6592	143120.4766	2153424.4063	COGO
6593	142649.5476	2151297.7635	COGO
6594	142493.4960	2151133.0884	COGO
6595	142850.7483	2151756.7733	COGO
6596	142641.3389	2151236.7619	COGO
6597	142531.1322	2151120.4651	COGO
6598	142156.7775	2150990.0285	COGO
6599	141770.6623	2150993.4081	COGO
6600	141527.1081	2151035.5257	COGO
6601	141217.7631	2151075.3830	COGO
6602	140350.6568	2151008.0977	COGO
6603	140241.2174	2150935.9365	COGO
6604	141555.3805	2150959.3011	COGO
6605	142156.4624	2150954.0399	COGO
6606	140720.9889	2150888.1031	COGO
6607	141288.2754	2150936.1789	COGO
6608	141555.2667	2150946.3016	COGO
6609	141145.5900	2151069.7825	COGO
6610	143191.9148	2150615.1243	COGO
6611	141321.6579	2150961.3373	COGO
6612	143311.2171	2156216.5716	COGO
6613	143176.6792	2155758.5443	COGO
6614	143042.1412	2155300.5169	COGO
6615	143192.7576	2156664.8885	COGO
6616	143069.3707	2157111.8743	COGO
6617	142511.2254	2156220.1964	COGO
6618	142582.6137	2155933.8798	COGO
6619	142696.8096	2155721.2213	COGO
6620	142844.6891	2155214.8201	COGO
6621	142882.3266	2154716.8604	COGO
6622	142605.9392	2156541.2968	COGO
6623	142719.2283	2156718.2125	COGO
6624	142830.9630	2157060.8391	COGO
6625	142836.2103	2157215.7914	COGO
6626	142842.3215	2158115.9006	COGO
6627	143266.3435	2155957.2135	COGO
6628	143163.4587	2155957.6128	COGO
6629	143043.0271	2155867.7964	COGO
6630	142997.9835	2155714.2468	COGO
6631	142970.7898	2155562.9075	COGO
6632	142964.0988	2155408.0108	COGO
6633	142949.5915	2154507.4277	COGO
6634	142948.9806	2154422.0198	COGO
6635	142949.6329	2154192.8546	COGO
6636	142948.3050	2154007.2193	COGO
6637	143279.5837	2156448.1402	COGO
6638	143177.6229	2156448.5358	COGO
6639	143028.7277	2156585.9674	COGO
6640	142976.9285	2157202.0536	COGO
6641	142943.2003	2157603.2082	COGO
6642	143153.4000	2150733.8074	COGO
6643	143298.5751	2150705.4157	COGO
6644	143119.4141	2150495.6564	COGO
6645	143069.7619	2150635.8849	COGO
6646	143073.1298	2150913.5169	COGO
6647	143219.4020	2150937.9175	COGO

SDS 10 OF 46

COORDINATES

POINT NAME	NORTHING	EASTING	DESCRIPTION
6648	143018.7604	2151109.2906	COGO
6649	143016.5705	2150961.8249	COGO
6650	142837.5489	2150915.5789	COGO
6651	142693.0485	2150943.1327	COGO
6652	142872.2095	2151152.8920	COGO
6653	142922.1852	2151013.4926	COGO
6654	142920.1689	2150735.8489	COGO
6655	142774.2084	2150710.8374	COGO
6656	142974.8501	2150539.4644	COGO
6657	142976.7222	2150687.5396	COGO
6658	143028.9631	2149886.0896	COGO
6659	143019.9226	2150035.8169	COGO
6660	142964.3351	2150167.5044	COGO
6661	142544.2397	2145645.6763	COGO
6662	147128.1987	2150795.2068	COGO
6663	147647.8385	2150863.7435	COGO
6664	147565.9896	2150864.0401	COGO
6665	147645.5052	2150878.5574	COGO
6666	147904.0104	2150901.1789	COGO
6667	147964.7893	2150900.8138	COGO
6668	147895.6423	2149508.4761	COGO
6670	142863.3533	2150278.4218	COGO
6671	142529.1846	2150597.9061	COGO
6672	142413.7535	2150693.6957	COGO
6673	142302.6577	2150738.7928	COGO
6674	142153.1201	2150750.5616	COGO
6675	141919.4218	2150768.3633	COGO
6676	141721.9566	2150780.3379	COGO
6677	141542.7016	2150788.5582	COGO
6678	141399.9150	2150795.1572	COGO
6679	141390.5253	2150795.2394	COGO
6680	141560.0507	2150787.1042	COGO
6681	141702.8373	2150780.5052	COGO
6682	142005.1576	2150758.6874	COGO
6683	142136.8008	2150750.7044	COGO
6684	141252.4962	2150791.4558	COGO
6685	143140.8879	2149983.1129	COGO
6686	143152.7655	2150132.6419	COGO
6687	143202.7522	2150251.0751	COGO
6688	143301.6035	2150363.8955	COGO
6689	144411.5434	2150766.3597	COGO
6690	144124.4942	2150743.8557	COGO
6691	143988.0122	2150738.9245	COGO
6692	143941.1131	2150739.2063	COGO
6693	143791.4181	2150729.6460	COGO
6694	143669.9076	2150680.0193	COGO
6695	143556.3197	2150582.0510	COGO
6696	144242.7960	2150872.2870	COGO
6697	144219.3265	2150872.4281	COGO
6698	142942.4647	2148387.1017	COGO
6699	141042.9141	2148188.9352	COGO
6700	142951.1777	2148110.8801	COGO
6701	144021.6216	2150885.2625	COGO
6702	143967.2201	2150892.0234	COGO
6703	143832.7631	2150900.7508	COGO
6704	143826.3132	2150900.7895	COGO
6705	143676.7437	2150912.1456	COGO
6706	143556.0621	2150963.0776	COGO
6707	143443.5820	2151062.3159	COGO
6708	143117.9174	2151392.7863	COGO
6709	143020.3373	2151506.7079	COGO
6710	142971.2870	2151627.5936	COGO
6711	142961.8980	2151777.2995	COGO
6712	144377.1442	2150866.1130	COGO
6713	144392.9658	2150864.7516	COGO
6714	144527.3140	2150858.5775	COGO
6715	144536.2236	2150858.4981	COGO
6716	144703.5228	2150864.8310	COGO
6717	145257.4997	2150910.1806	COGO
6718	145267.8300	2150913.3720	COGO
6719	145280.3959	2150920.5266	COGO
6720	143006.9661	2154005.3222	COGO
6721	142544.2397	2145645.6763	COGO
6722	142479.5438	2151066.0258	COGO
6723	142231.4596	2150953.3835	COGO
6724	142226.1006	2151294.6984	COGO
6725	142228.6858	2153989.8391	COGO
6726	143185.7268	2147098.0302	COGO
6728	143204.3943	2147304.4828	COGO
6729	146100.5121	2152997.0312	COGO
6730	143179.6027	2148423.2686	COGO
6731	146044.2629	2148396.1109	COGO
6732	143180.2685	2148328.6447	COGO
8001	146312.2486436	2151234.9138830	COGO
8007	143116.5188223	2151508.9391270	COGO
8013	144704.8474071	2153690.5186116	COGO
8014	144662.5879660	2153599.8867207	COGO
8015	144047.8216716	2153904.8972604	COGO
8016	144028.4956262	2153806.7825114	COGO
8017	145641.3448978	2151316.1160151	COGO
8020	144143.4689371	2146918.1491395	COGO
8021	143315.7506400	2149358.5211200	COGO
8022	142727.4608199	2146596.1836774	COGO
8023	142327.8479439	2149927.5540073	COGO
8024	145550.4635976	2151163.6378551	COGO
8025	145390.4662609	2151164.5610429	COGO
8026	145551.3172213	2151316.6595884	COGO
8028	144883.5389797	2151003.2237650	COGO
8029	144884.7222051	2151198.4001785	COGO
8030	144971.3574012	2151320.2092377	COGO
8031	144871.5179063	2151255.8388393	COGO
8032	142168.7998517	2150028.9624550	COGO
8033	144681.0689459	2151240.4761774	COGO
8034	144596.4973405	2151239.6921058	COGO

COORDINATES

POINT NAME	NORTHING	EASTING	DESCRIPTION
8035	144832.3000188	2151270.6655256	COGO
8036	143128.4453338	2152359.9268332	COGO
8037	144079.7632700	2150431.8785300	COGO
8038	142937.9324199	2148134.6175973	COGO
8039	143920.6542400	2150181.9504000	COGO
8040	141678.8272693	2151050.3583679	COGO
8041	144713.7328719	2151242.5548390	COGO
8042	144101.0815200	2150445.1494800	COGO
8043	143183.1465951	2146240.4711864	COGO
8044	144197.9732057	2151357.1766093	COGO
8045	144133.7143493	2151395.0470347	COGO
8046	144064.7583774	2151441.7085985	COGO
8047	144015.7543487	2151435.3543024	COGO
8048	143939.8912099	2151001.3687401	COGO
8049	143963.8891102	2151299.9519059	COGO
8050	143899.0684582	2151304.2962749	COGO
8051	145563.7769588	2151751.2311822	COGO
8052	145564.6285247	2151901.3047662	COGO
8053	145553.7771476	2151751.2926271	COGO
8054	142726.4567876	2151786.6296248	COGO
8055	144062.2521695	2146232.6911744	COGO
8056	143116.5394247	2151508.9588300	COGO
8058	144636.3287409	2153560.5765975	COGO
8059	142562.4664403	2146597.5570369	COGO
8060	142565.2709445	2146895.9672860	COGO
8061	143271.1564551	2152986.1121737	COGO
8062	143325.8559205	2152985.8703423	COGO
8063	143630.1412026	2153130.1507941	COGO
8064	143676.5229808	2153124.8826783	COGO
8065	143785.4394825	2152992.7969650	COGO
8066	143780.2577760	2152945.7715887	COGO
8069	146283.0062519	2153552.1258527	COGO
8070	142712.3455208	2146958.9678337	COGO
8071	143697.9716963	2152480.9261155	COGO
8072	142377.2775139	2146897.5385287	COGO
8073	142383.0331887	2147497.8514926	COGO
8075	143115.2987702	2152279.2233739	COGO
8076	140939.6764377	2151103.6935359	COGO
8079	144068.5372235	2146942.8733638	COGO
8080	147279.4449627	2152689.3023691	COGO
8081	140941.4918770	2151357.5770452	COGO
8082	143601.8681712	2152194.5029504	COGO
8083	143414.8173400	2147311.3030800	COGO
8084	147223.7180660	2152990.2300313	COGO
8086	143416.7534100	2147514.1338400	COGO
8087	143853.8758225	2148247.5132865	COGO
8088	143350.9590500	2148560.4692500	COGO
8089	140951.4917521	2151357.5270655	COGO
8090	143351.3500400	2148629.1925600	COGO
8091	143446.1040100	2148948.5985800	COGO
8093	143310.5000757	2151309.2961095	COGO
8095	145632.3058892	2152086.9054294	COGO
8096	143884.4083828	2151653.5827671	COGO
8097	144191.9676501	2153670.1062603	COGO
8098	142922.4953686	2146492.5567111	COGO
8099	144882.6648700	2150328.9921300	COGO
8100	142907.4960311	2146492.6976848	COGO
8101	142909.0937332	2146662.6901768	COGO
8102	143407.1841588	2151888.3987892	COGO
8104	143262.7686832	2153117.6135829	COGO
8105	145726.9064512	2152200.6800787	COGO
8106	140952.6733714	2151522.7728409	COGO
8107	143204.2987896	2153462.2184181	COGO
8108	143964.5710049	2151475.3644741	COGO
8109	143322.5583408	2151705.9839525	COGO
8110	143770.1434412	2151928.4933627	COGO
8111	143878.8452992	2151005.3762230	COGO
8112	143949.2990343	2148625.5646358	COGO
8113	143351.3638800	2148630.9912300	COGO
8114	143969.5663037	2151531.4825870	COGO
8115	143145.0715561	2153664.9229499	COGO
8116	143860.3613238	2151702.3569750	COGO
8119	143587.5128095	2151581.3445847	COGO
8120	143760.4734119	2152193.8517296	COGO
8121	147279.4739923	2152689.1483024	COGO
8122	145508.0460052	2152448.7629480	COGO
8123	143806.8910391	2151898.0811275	COGO
8126	142924.0930707	2146662.5492031	COGO
8127	143589.6649318	2151342.3124486	COGO
8128	145181.4604232	2152450.4616867	COGO
8129	145796.3851449	2152531.5913280	COGO
8130	145180.6581893	2152296.2307731	COGO
8131	143283.2783661	2153095.5689689	COGO
8136	143787.9879082	2152017.8502937	COGO
8137	143767.4854120	2153459.8111232	COGO
8138	144442.2632857	2153628.2868227	COGO
8139	142555.5119103	2146496.0413383	COGO
8140	146323.0059244	2153551.9639857	COGO
8141	143739.3957627	2152292.1430940	COGO
8142	147249.0010724	2152834.2077196	COGO
8143	143354.2068300	2148683.9974900	COGO
8146	143343.2773308	2153095.2164900	COGO
8147	146951.7507763	2153549.4196384	COGO
8150	143233.6951253	2147827.6222814	COGO
8152	143548.6111839	2153192.2637613	COGO
8153	143553.8865162	2153238.6346549	COGO
8154	143372.2523336	2153386.1643932	COGO

COORDINATES

POE & ASSOCIATES OKLAHOMA CITY, OK

POINT NAME	NORTHING	EASTING	DESCRIPTION
8155	143231.6450681	2153301.7618350	COGO
8156	142651.0499433	2147084.8362260	COGO
8157	143361.7295000	2148736.5013600	COGO
8158	144361.5081045	2153650.2934289	COGO
8159	143729.6514347	2152289.8734916	COGO
8160	143716.2927965	2152358.1996414	COGO
8161	143726.5727522	2152358.1694372	COGO
8162	142622.4273344	2147210.7795734	COGO
8166	142623.5480879	2147350.7750873	COGO
8167	142429.9601161	2147385.7006484	COGO
8168	142909.4553964	2147613.5757577	COGO
8169	143226.8690874	2151972.7925246	COGO
8171	143600.1306322	2151959.1396655	COGO
8172	143673.9171927	2151971.4472083	COGO
8173	143764.8101487	2151989.7630201	COGO
8174	142763.5545285	2147660.2117674	COGO
8175	143373.8369000	2148788.0040800	COGO
8176	143390.5889000	2148838.6072300	COGO
8177	143411.6284400	2148887.2093600	COGO
8178	143436.8949200	2148933.7783000	COGO
8179	143469.7476800	2148985.4055000	COGO
8180	143462.2020400	2149019.9345300	COGO
8181	143457.1141000	2149023.1956800	COGO
8182	143363.1955800	2149196.8072900	COGO
8183	143567.2373827	2149194.9782900	COGO
8184	143414.2418000	2149059.9912400	COGO
8185	143385.7631300	2149101.7346000	COGO
8188	145002.6995100	2150323.3096200	COGO
8190	145002.7436300	2150327.8164400	COGO
8192	143368.7849000	2149147.5823600	COGO
8193	143363.1908000	2149196.1075800	COGO
8194	143363.6818800	2149248.1034800	COGO
8195	143364.2030700	2149303.0801500	COGO
8197	143364.7242500	2149358.0568400	COGO
8198	143365.2454200	2149413.0308800	COGO
8199	143365.2591000	2149414.4734600	COGO
8200	144106.4245355	2149407.3154468	COGO
8202	143787.4200700	2150181.6063500	COGO
8203	143367.8121000	2149469.1697200	COGO
8204	143374.4337100	2149523.8415800	COGO
8205	143378.8141700	2149548.5974200	COGO
8206	143788.5445400	2150182.9014700	COGO
8207	143842.7932100	2150242.3646300	COGO
8208	144904.7909212	2152297.6657000	COGO
8209	143915.4737000	2150241.6756100	COGO
8210	143975.8393000	2150240.8658800	COGO
8211	143369.1139100	2149524.6869500	COGO
8212	143349.1504100	2149470.7283600	COGO
8215	143330.7635100	2149413.4294200	COGO
8218	140363.1907341	2151525.7190900	COGO
8221	143303.2096700	2149303.6583800	COGO
8222	143293.0535900	2149248.7730200	COGO
8223	143285.3782800	2149195.0758700	COGO
8225	143278.7421300	2149126.1422300	COGO
8226	143474.8778400	2149736.0596300	COGO
8227	143552.5268900	2149848.8065300	COGO
8228	144077.8832900	2150239.8667700	COGO
8230	143959.3355300	2150323.7305800	COGO
8231	145122.7782700	2150322.1339300	COGO
8232	142716.6251248	2147679.0405206	COGO
8233	143833.1829300	2149804.3155600	COGO
8234	143786.7217100	2150107.9412800	COGO
8235	146971.7506125	2153549.3387049	COGO
8236	145651.7199216	2153114.2075321	COGO
8237	144079.3569700	2150390.3803800	COGO
8238	144212.7483500	2150389.0743500	COGO
8240	144213.2866200	2150444.0508800	COGO
8241	144213.8249000	2150499.0274100	COGO
8242	144263.7908900	2150491.6378200	COGO
8243	145648.3012417	2152521.7173950	COGO
8244	144398.8795000	2150490.3151700	COGO
8245	144585.1929700	2150610.2507200	COGO
8246	144705.2103400	2150602.8040300	COGO
8247	144705.2717300	2150609.0750400	COGO
8248	144705.6156200	2150644.1976500	COGO
8249	144825.2891000	2150601.6283400	COGO
8250	144834.1612986	2152369.0339261	COGO
8251	145295.4127103	2150590.3700599	COGO
8252	145295.4232841	2150591.4500150	COGO
8253	145294.8252764	2150530.3725522	COGO
8254	145294.8358502	2150531.4525073	COGO
8255	145174.8322189	2150531.6690663	COGO
8256	145175.4196490	2150591.6661906	COGO
8257	145485.1647766	2150541.0403000	COGO
8258	145485.7032542	2150596.0376639	COGO
8259	145435.0547902	2150530.0516189	COGO
8260	145435.6422203	2150590.0487432	COGO
8261	145125.4693999	2150596.9922671	COGO
8262	140333.1911088	2151525.8690289	COGO
8263	145124.9309224	2150541.9949032	COGO

PLS			
DRAWN			
CHECKED			
APPROVED			
CREW	POE		

POE & ASSOCIATES, OKLAHOMA CITY, OK
SURVEY DIVISION

SURVEY DATA SHEET

SWO 292311 PROJECT NO. 0903217(1) SHEET NO. SDI0

OKLAHOMA COUNTY

POE & ASSOCIATES, OKLAHOMA CITY, OK

COORDINATES

POINT NAME	NORTHING	EASTING	DESCRIPTION
8265	142331.4507539	2150308.5169716	COGO
8266	145005.3859794	2150597.6917255	COGO
8269	145004.8475018	2150542.6943616	COGO
8270	145005.4349319	2150602.6914859	COGO
8271	145004.8964543	2150547.6941219	COGO
8272	144885.3559999	2150603.8504571	COGO
8273	144884.8175223	2150548.8530932	COGO
8274	144824.7506224	2150546.6309760	COGO
8275	142172.5358119	2150424.0047897	COGO
8276	144704.6718624	2150547.8066660	COGO
8277	144704.7332524	2150554.0776760	COGO
8278	144584.6544924	2150555.2533560	COGO
8279	144398.9440124	2150496.9039960	COGO
8280	144534.0326224	2150495.5813460	COGO
8281	142555.0381882	2146445.6136018	COGO
8282	142729.7578613	2152247.9537050	COGO
8283	140380.4781887	2153901.8415735	COGO
8284	141696.6233930	2153478.5640565	COGO
8285	141684.2956562	2151794.6231802	COGO
8286	139270.5192614	2150987.3021912	COGO
8287	139281.0736930	2152274.3861573	COGO
8288	139601.0616382	2152271.6085767	COGO
8289	138281.1113644	2152283.0660966	COGO
8291	139590.5070169	2150984.5014754	COGO
8292	140368.6924467	2152266.1444859	COGO
8293	141687.6742888	2152256.1363070	COGO
8294	137731.1320837	2152287.8400633	COGO
8295	137764.1308405	2152287.5536253	COGO
8296	143619.5973827	2156215.3156823	COGO
8297	143669.5969681	2156215.1120513	COGO
8298	143620.0903279	2155650.3158973	COGO
8299	143595.0903374	2155650.2940856	COGO
8300	145646.5670334	2152221.1623981	COGO
8301	145646.3362365	2152181.1630640	COGO
8305	145640.9028146	2151239.4987393	COGO
8306	147272.6892203	2152735.0681813	COGO
8307	143796.1057251	2152027.6876269	COGO
8308	145639.1686062	2150938.9437425	COGO
8309	142328.7936130	2150027.5495357	COGO
8310	142717.0979594	2147729.0382849	COGO
8311	143214.2571571	2151912.0888244	COGO
8312	143686.1635427	2151910.6687013	COGO
8313	142661.1435852	2147094.7525562	COGO
8314	142664.0680379	2147405.9088136	COGO
8315	143668.6336794	2156158.1201916	COGO
8316	142314.6123546	2148528.0297330	COGO
8317	142313.1938510	2148378.0364404	COGO
8319	142938.7473108	2148222.1138026	COGO
8320	142791.7538840	2148223.5039362	COGO
8321	142790.9264236	2148136.0078488	COGO
8322	142939.4565626	2148297.1104490	COGO
8324	142748.7558068	2148223.9105739	COGO
8325	142940.1658144	2148372.1070953	COGO
8327	142513.1849079	2148376.1451022	COGO
8328	142511.7664043	2148226.1518096	COGO
8329	142941.5843180	2148522.1003880	COGO
8330	142559.2712094	2146896.0236724	COGO
8331	146270.2572653	2150935.1602972	COGO
8332	146310.2565464	2150934.9204972	COGO
8336	142325.9566058	2149727.5629504	COGO
8337	142952.9321578	2149722.0260598	COGO
8338	142505.9522475	2147611.3593015	COGO
8339	142306.5645270	2147677.0477868	COGO
8348	142317.4464997	2148827.7059539	COGO
8349	141667.4718443	2148833.4459382	COGO
8353	141667.7082616	2148858.4448203	COGO
8354	142317.6829169	2148852.7048360	COGO
8355	142757.4284278	2148823.7176665	COGO
8356	142757.5702782	2148838.7169957	COGO
8358	142944.5629867	2148837.0656464	COGO
8360	142935.9328207	2149721.8759368	COGO
8361	142932.4643902	2149355.1223371	COGO
8362	142453.2830751	2149359.3540302	COGO
8363	142453.1412247	2149344.3547009	COGO
8364	142932.3225399	2149340.1230079	COGO
8365	142932.1501444	2149321.8938230	COGO
8367	142949.1494815	2149321.7437003	COGO
8368	142945.3668053	2148922.0618322	COGO
8369	142928.3674681	2148922.2119549	COGO
8370	142927.4217991	2148822.2164265	COGO
8371	142944.4211362	2148822.0663038	COGO
8372	146941.3452055	2150931.1370519	COGO
8373	142350.9556310	2149727.3421818	COGO
8374	142349.0642929	2149527.3511249	COGO
8375	145839.7119	2150507.6158	COGO
8376	145784.9172	2150507.9443	COGO
8377	142321.7010949	2149277.5830585	COGO
8378	146961.3448461	2150931.0171519	COGO
8379	142922.0254562	2146442.5589193	COGO
8380	142697.9970639	2147824.2036988	COGO
8381	142699.6417573	2147999.1959700	COGO
8383	142921.7477847	2148222.2432558	COGO
8384	142944.3740418	2148817.0871969	COGO
8387	141633.1378865	2150490.2106447	COGO
8389	141333.1495841	2150492.8598683	COGO

COORDINATES

POINT NAME	NORTHING	EASTING	DESCRIPTION
8390	146942.5377295	2151231.2046823	COGO
8391	142331.6306202	2150327.5361211	COGO
8393	146943.7302535	2151531.2723127	COGO
8394	146943.8892196	2151571.2719968	COGO
8395	146945.0817436	2151871.3396271	COGO
8396	146946.2742676	2152171.4072575	COGO
8397	146946.4332337	2152211.4069416	COGO
8399	141678.8189576	2150033.2895201	COGO
8400	142323.2881027	2146047.6689934	COGO
8401	141331.1022105	2150276.3695492	COGO
8402	141031.1139081	2150279.0187727	COGO
8403	142667.9982337	2147824.4686212	COGO
8404	142667.0998480	2147729.4728692	COGO
8405	142914.1902132	2147727.2907920	COGO
8406	146947.4551076	2152468.5349111	COGO
8407	141641.3117272	2146053.3455425	COGO
8408	146948.3453178	2152692.5331421	COGO
8409	142696.9780588	2145894.4102473	COGO
8410	141032.1541440	2150389.0138540	COGO
8411	140678.2302198	2150463.4821505	COGO
8414	142316.9027220	2149827.6530457	COGO
8415	142326.9022748	2149827.5584788	COGO
8416	142317.9429572	2149937.6481271	COGO
8417	143827.3703429	2153376.0673680	COGO
8418	142319.9974003	2145697.5444571	COGO
8419	143844.9790091	2153396.6071487	COGO
8421	142756.3762961	2147636.2644715	COGO
8422	144335.2205261	2153553.8104603	COGO
8423	144360.4971179	2152953.8693342	COGO
8424	145089.1273987	2153272.1682054	COGO
8425	144836.7802244	2153397.8340180	COGO
8426	144650.7353752	2153468.5886848	COGO
8427	145698.9535234	2152870.8737313	COGO
8428	145551.1670340	2153048.3120693	COGO
8429	140292.7685414	2150314.3676414	COGO
8430	139937.9092567	2150317.8119781	COGO
8431	139629.6159216	2150513.8771896	COGO
8432	139729.6104157	2150512.8278320	COGO
8433	139939.7788433	2150510.6222921	COGO
8434	139429.6269334	2150515.9759049	COGO
8435	139630.9182716	2150714.5220018	COGO
8437	142666.6270135	2147679.4751049	COGO
8438	142650.1165410	2148049.6352715	COGO
8439	142651.7585015	2148224.6482265	COGO
8441	144131.3793738	2145631.8423946	COGO
8442	144836.2151917	2152763.8985844	COGO
8443	144468.3501681	2152765.8120387	COGO
8444	144443.4807808	2152790.9414955	COGO
8445	144359.6519149	2152791.3775323	COGO
8446	144358.5800018	2152585.3003201	COGO
8447	144383.4493891	2152560.1708633	COGO
8448	144413.3989839	2152560.0150801	COGO
8449	144411.7523116	2152243.4393627	COGO
8450	144378.9820215	2152211.0082185	COGO
8451	144277.5593935	2152211.5357695	COGO
8452	144277.4563686	2152191.7290375	COGO
8453	143436.5681136	2151193.5839071	COGO
8454	143578.7717508	2151353.4233535	COGO
8455	139730.9296301	2150712.6311322	COGO
8456	139430.9250708	2150715.9716919	COGO
8457	138806.5684060	2150222.3614423	COGO
8458	139039.6664654	2150519.9921327	COGO
8459	139139.6612313	2150518.9690075	COGO
8460	139140.9897451	2150723.6446960	COGO
8461	139036.5563676	2150220.0082543	COGO
8462	138809.6785037	2150522.3453207	COGO
8463	138748.2221051	2150478.3036958	COGO
8469	138088.8472662	2150484.3500633	COGO
8471	138086.9357688	2150302.3601015	COGO
8472	137764.4476077	2150305.1234153	COGO
8473	145640.8996	2151238.9387	COGO
8474	145650.8996	2151238.9290	COGO
8475	145692.4858	2151038.9369	COGO
8476	145705.6842	2150975.4646	COGO
8477	145715.7699	2150974.9263	COGO
8478	145716.1392	2151038.9252	COGO
8479	145715.8995	2151238.8656	COGO
8480	145915.8994	2151238.6707	COGO
8481	145914.3155	2150964.1553	COGO
8482	146016.9645	2150958.5855	COGO
8483	146074.2545	2150958.5297	COGO
8484	146075.8700	2151238.5251	COGO
8485	146271.7342	2151238.3240	COGO
8486	146176.4342	2151238.4168	COGO
8487	146174.2544	2150958.4323	COGO
8488	146270.3702	2150958.3386	COGO
8489	146962.5386	2151231.4032	COGO
8490	147387.4650	2150895.3405	COGO
8491	146774.1136	2151230.0265	COGO
8492	146773.1463	2150986.6185	COGO
8493	146794.2588	2150966.8907	COGO
8494	146922.8431	2150987.1749	COGO
8495	146921.8442	2150977.2249	COGO
8496	146707.7387	2150959.8824	COGO
8497	146333.0408	2150969.2307	COGO
8498	146330.4370	2150972.7153	COGO
8499	146310.4411	2150972.8077	COGO

COORDINATES

POINT NAME	NORTHING	EASTING	DESCRIPTION
8500	146311.7207	2151235.4746	COGO
8501	146734.8994	2151232.3827	COGO
8502	146732.9120	2150984.2567	COGO
8503	146980.1552	2150996.3526	COGO
8504	146982.6353	2150986.6650	COGO
8505	147111.1165	2151006.4784	COGO
8506	147107.3062	2151031.1863	COGO
8507	146986.6367	2151031.5128	COGO
8508	146988.1378	2151409.2298	COGO
8509	147219.1376	2151408.9509	COGO
8510	147219.0954	2151373.9510	COGO
8511	147331.0953	2151373.8158	COGO
8512	147332.8983	2151827.4822	COGO
8513	147233.5986	2151827.7508	COGO
8514	147235.5747	2152324.9632	COGO
8515	147074.5493	2152405.2031	COGO
8516	147072.2561	2151828.1872	COGO
8517	146964.9115	2151828.4776	COGO
8518	147229.6256	2151024.7540	COGO
8519	147230.4630	2151235.4523	COGO
8520	147330.4629	2151235.3316	COGO
8521	147261.7064	2151029.7013	COGO
8522	147329.6537	2151048.3501	COGO
8523	148234.7538	2150890.2609	COGO
8524	148236.5382	2151339.2573	COGO
8525	148156.5383	2151339.3539	COGO
8526	148157.3570	2151545.3523	COGO
8527	148007.0597	2151546.2534	COGO
8528	148008.6235	2151939.7483	COGO
8529	147848.9586	2152019.3103	COGO
8530	147845.9298	2151206.3500	COGO
8531	148001.6465	2151226.3817	COGO
8532	148156.4344	2151313.2141	COGO
8533	148238.4695	2151825.2146	COGO
8534	145636.4530	2150658.8357	COGO
8535	146305.1476	2150654.8268	COGO
8536	146335.9470	2150654.6422	COGO
8537	146620.1488	2150678.3630	COGO
8538	146729.1399	2150687.4598	COGO
8539	145951.2493	2150363.9458	COGO
8540	145954.2439	2150656.9305	COGO
8541	145841.2459	2150657.6079	COGO
8542	145838.2513	2150364.6233	COGO
8543	145783.4557	2150364.9518	COGO
8544	146302.1529	2150361.8421	COGO
8545	145663.4578	2150365.6712	COGO
8546	145664.9194	2150508.6637	COGO
8547	145666.1970	2150633.6572	COGO
8548	145691.2489	2150658.5072	COGO
8549	146402.1574	2150367.7694	COGO
8550	146617.1711	2150366.1140	COGO
8551	146932.7017	2150363.6847	COGO
8552	146934.4657	2150592.8079	COGO
8553	146992.6999	2150363.2228	COGO
8554	147112.6964	2150362.2989	COGO
8555	147308.8330	2150421.8233	COGO
8556	147619.7405	2150516.1789	COGO
8557	147622.5393	2150809.9502	COGO
8558	146928.8472	2150690.4625	COGO
8559	146917.6231	2150701.6866	COGO
8560	146988.4522	2150697.3430	COGO
8561	147001.0513	2150709.9420	COGO
8562	146994.4666	2150592.8070	COGO
8563	147311.9728	2150751.4033	COGO
8564	147091.6657	2150720.2779	COGO
8565	147088.2571	2150362.4871	COGO
8566	147090.4006	2150587.4769	COGO
8567	147520.9020	2150486.1829	COGO
8568	147523.7911	2150789.4491	COGO
8569	147828.1286	2150859.2534	COGO
8570	147747.2383	2150515.4145	COGO
8571	147750.3274	2150839.6719	COGO
8572	147874.7360	2150514.6502	COGO
8573	148209.3034	2150856.9682	COGO
8574	147878.0161	2150858.9543	COGO
8575	148230.5604	2150512.5170	COGO
8576	148054.3858	2150857.8969	COGO
8577	148050.5636	2150513.5960	COGO
8578	148234.1088	2150832.1629	COGO
8579	148052.7207	2150707.9062	COGO
8580	148232.7175	2150706.8271	COGO
8581	147445.9900	2151163.6491	COGO
8582	147330.1522	2151163.5487	COGO
8583	147808.0735	2152039.6836	COGO
8584	147805.7355	2151451.3982	COGO
8585	147823.1796	2151433.9961	COGO
8586	147822.4474	2151249.7376	COGO
8587	147846.1122	2151255.3097	COGO
8588	143453.3694	2154086.1635	COGO
8589	143993.8357	2154037.9784	COGO
8590	143461.4263	2151121.3844	COGO
8591	143966.5681	2154074.5025	COGO
8592	144483.1911	2154431.7467	COGO
8593	143735.9393	2154410.7563	COGO
8594	143658.3558	2154549.6650	COGO
8595	143612.9137	2154784.3626	COGO
8596	143090.2197	2154625.8445	COGO
8597	143578.3805	2154850.3092	COGO
8598	144259.4365	2154718.5363	COGO
8599	143613.3796	2154850.0610	COGO
8600	144235.2671	2154791.7995	COGO
8601	143104.3932	2155118.8268	COGO
8602	143078.1188	2154921.0755	COGO
8603	143056.7684	2154634.5347	COGO

COORDINATES

POINT NAME	NORTHING	EASTING	DESCRIPTION
8604	143632.0407	2154630.4528	COGO
8605	143303.6831	2154919.4759	COGO
8606	143305.2014	2155133.5806	COGO
8607	143580.5587	2155157.4708	COGO
8608	143584.0534	2155650.2845	COGO
8609	143585.0903	2155796.4954	COGO
8610	143600.0903	2155796.4954	COGO
8611	143600.0903	2156140.3955	COGO
8612	143763.2838	2154458.7675	COGO
8613	143663.0774	2154785.7725	COGO
8614	143663.5358	2154850.4162	COGO
8615	143698.5355	2154850.2736	COGO
15872	140378.6837730	2150995.9483060	BM
15873	141700.3823620	2151070.0733500	BM
15875	143428.6951520	2151210.7776840	BM
15876	143599.0558960	2150562.8433890	BM
50285	145553.8078560	2150653.4402270	BM
50303	144252.2513510	2150490.5006800	BM
50304	143919.9301930	2150298.9654250	BM
50305	143490.7027260	2149895.1502220	BM
50307	143401.6750190	2149250.2771580	BM
50309	143390.2218670	2148652.9488630	BM
50311	143242.1995770	2148000.3678520	BM
50313	143237.6604340	2147408.0054470	BM
50315	143205.3644390	2146579.6986950	BM
50317	143182.8490400	2145913.5696550	BM
50318	143197.8093010	2145708.7064360	BM
50319	142888.1129440	2145743.2748250	BM
50321	142901.9036360	2146335.1472670	BM
50323	142916.9876250	2146936.6238090	BM
50325	142907.3605680	2147568.1486410	BM
50327	142911.6066500	2148227.1133380	BM
50329	142802.9275290	2148847.0583200	BM
50331	142760.5652270	2149409.0325230	BM
50332	142643.1187210	2149720.2042730	BM
50333	142464.1441130	2150123.0392650	BM
50334	142296.1946730	2150304.5431320	BM
50335	141839.2050150	2150657.0857100	BM
50336	141535.0147150	2150701.4701360	BM
50338	140917.9882580	2150688.8599450	BM
50340	140383.9186640	2150617.3816870	BM
50341	145812.9439860	2151012.1135020	BM
50343	145129.4986010	2150988.2197760	BM
50344	143845.2559930	2150991.1289140	BM
50345	143455.5868870	2151409.9459730	BM
50346	143116.7567800	2151924.9735110	BM
50347	143220.7316130	2152558.2994020	BM
50348	143234.7555270	2153314.0595330	BM
50349	143103.1601590	2155087.5292970	BM
50350	143227.6751920	2155899.3994280	BM
50351	140981.2726690	2151191.0884400	BM
50352	141742.5192370	2151700.9568670	BM
50355	142212.8005530	2151785.9213220	BM
50356	142650.3998690	2152622.6482410	BM
50357	142589.5668460	2153095.4772350	BM
50358	142313.0682340	2153577.2256960	BM
50359	142726.6169390	2154100.2562350	BM
50360	142726.3158390	2155264.4566610	BM
50361	142543.6667540	2155843.1012460	BM
50362	142400.6015830	2156176.7690840	BM
50363	143072.6477560	2154416.4572460	BM
50364	145128.6796490	2150516.6250320	BAR & CAP 0-55-1837 "CHURCH"
50365	143511.6047900	2147104.4432610	'X' ON CURB 0-55-1838 "CIRCUIT CITY"
50366	140934.0270660	2155986.3656050	BAR & CAP 0-55-1839 "DIAMOND"
50367	140344.4017030	2150218.6566280	BAR & CAP 0-55-1840 "HOSPICE"
50368	143197.9033480	2152447.0616600	BAR & CAP 0-55-1841 "MALL"
50369	145912.2610280	2152981.6647200	NGS P216-STEELROD "RAILROAD"
50370	144445.4785770	2150947.4412100	BM "RAMADA"

PLS		POE & ASSOCIATES, OKLAHOMA CITY, OK SURVEY DIVISION
DRAWN		SURVEY DATA SHEET
CHECKED		
APPROVED		
CREW	POE	SWO 2923(11) PROJECT NO. 0903217) SHEET NO. SDII

OKLAHOMA COUNTY

POE & ASSOCIATES, OKLAHOMA CITY, OK

Project Name: EC-1060*Crossroads
Description: survey alg for Crossroads Interchange
Horizontal Alignment Name: CL SURVEY A035
Description:
Style: Default

	STATION	NORTHING	EASTING
Element: Linear			
POB (1323)	2500.00	137519.4209520	2150872.6245422
PI (6009)	4000.00	139019.3634951	2150859.4956665
Tangent Direction:	N 0°30'05.37" W		
Tangent Length:	1500.000		
Element: Linear			
PI (6009)	4000.00	139019.3634951	2150859.4956665
PI (6010)	4600.00	139619.3405124	2150854.2441163
Tangent Direction:	N 0°30'05.37" W		
Tangent Length:	600.000		
Element: Linear			
PI (6010)	4600.00	139619.3405124	2150854.2441163
PI (6008)	5338.63	140357.9461760	2150847.7791607
Tangent Direction:	N 0°30'05.37" W		
Tangent Length:	738.634		
Element: Linear			
PI (6008)	5338.63	140357.9461760	2150847.7791607
PI (1350)	6000.00	141019.2909597	2150841.9904370
Tangent Direction:	N 0°30'05.38" W		
Tangent Length:	661.370		
Element: Linear			
PI (1350)	6000.00	141019.2909597	2150841.9904370
PI (1351)	6500.00	141519.2718074	2150837.6141518
Tangent Direction:	N 0°30'05.37" W		
Tangent Length:	500.000		
Element: Linear			
PI (1351)	6500.00	141519.2718074	2150837.6141518
PI (1354)	7000.00	142019.2526552	2150833.2378665
Tangent Direction:	N 0°30'05.37" W		
Tangent Length:	500.000		
Element: Linear			
PI (1354)	7000.00	142019.2526552	2150833.2378665
PI (1355)	7500.00	142519.2335030	2150828.8615813
Tangent Direction:	N 0°30'05.37" W		
Tangent Length:	500.000		
Element: Linear			
PI (1355)	7500.00	142519.2335030	2150828.8615813
PI (1084)	7979.44	142998.6493000	2150824.6653000
Tangent Direction:	N 0°30'05.37" W		
Tangent Length:	479.434		
Element: Linear			
PI (1084)	7979.44	142998.6493000	2150824.6653000
PI (1361)	8500.01	143519.2099033	2150821.5374945
Tangent Direction:	N 0°20'39.33" W		
Tangent Length:	520.570		
Element: Linear			
PI (1361)	8500.01	143519.2099033	2150821.5374945
PI (1362)	9000.01	144019.2008779	2150818.5332824
Tangent Direction:	N 0°20'39.33" W		
Tangent Length:	500.000		
Element: Linear			
PI (1362)	9000.01	144019.2008779	2150818.5332824
PI (1365)	9500.01	144519.1918526	2150815.5290702
Tangent Direction:	N 0°20'39.33" W		
Tangent Length:	500.000		
Element: Linear			
PI (1365)	9500.01	144519.1918526	2150815.5290702
PI (1366)	10000.01	145019.1828272	2150812.5248580
Tangent Direction:	N 0°20'39.33" W		
Tangent Length:	500.000		
Element: Linear			
PI (1366)	10000.01	145019.1828272	2150812.5248580
PI (6007)	10618.82	145637.9858814	2150808.8067868
Tangent Direction:	N 0°20'39.32" W		
Tangent Length:	618.814		
Element: Linear			
PI (6007)	10618.82	145637.9858814	2150808.8067868
PC (1060)	11317.69	146336.8429785	2150804.6076882
Tangent Direction:	N 0°20'39.34" W		
Tangent Length:	698.870		
Element: Circular			
P.C. STA. (1060)	11317.69	146336.8430	2150804.6077
P.I. STA. ( )	12203.22	147222.3501	2150799.2871
C.C. STA. (1063)		146371.2687	2156534.0823
P.T. STA. (1075)	13074.84	148068.1468	2151061.5446
Radius:	5729.58		
Delta:	17°34'17.16" Right		
Degree of Curvature(Arc):	1°00'00.00"		
Length:	1757.14		
Tangent:	885.52		
Chord:	1750.27		
Middle Ordinate:	67.23		
External:	68.03		
Tangent Direction:	N 0°20'39.33" W		
Radial Direction:	N 89°39'20.67" E		
Chord Direction:	N 8°26'29.25" E		
Radial Direction:	S 72°46'22.17" E		
Tangent Direction:	N 17°13'37.83" E		

SDS 12 OF 46

Project Name: EC-1060*Crossroads
Description: survey alg for Crossroads Interchange
Horizontal Alignment Name: CL SURVEY A035 *CONTINUED
Description:
Style: Default

	STATION	NORTHING	EASTING
Element: Linear			
POB (1075)	13074.84	148068.1468	2151061.5446
PI (1076)	13302.75	148285.8404	2151129.0452
Tangent Direction:	N 17°13'37.82" E		
Tangent Length:	227.92		

Project Name: EC-1060*Crossroads
Description: survey alg for Crossroads Interchange
Horizontal Alignment Name: CL SURVEYA034
Description: PF2-Plan5
Style: Default

	STATION	NORTHING	EASTING
Element: Linear			
POB (6417)	37139.31	143039.5414473	2145147.3663457
PI (6002)	37633.43	143044.2256038	2145641.4636161
Tangent Direction:	N 89°27'24.62" E		
Tangent Length:	494.119		
Element: Linear			
PI (6002)	37633.43	143044.2256038	2145641.4636161
PI (6001)	39343.79	143060.4394888	2147351.7472887
Tangent Direction:	N 89°27'24.62" E		
Tangent Length:	1710.361		
Element: Linear			
PI (6001)	39343.79	143060.4394888	2147351.7472887
PI (6240)	39500.00	143061.9203292	2147507.9502696
Tangent Direction:	N 89°27'24.62" E		
Tangent Length:	156.210		
Element: Linear			
PI (6240)	39500.00	143061.9203292	2147507.9502696
PI (6241)	40000.00	143066.6602320	2148007.9278024
Tangent Direction:	N 89°27'24.62" E		
Tangent Length:	500.000		
Element: Linear			
PI (6241)	40000.00	143066.6602320	2148007.9278024
PI (6004)	40274.55	143069.2629298	2148282.4672851
Tangent Direction:	N 89°27'24.62" E		
Tangent Length:	274.552		
Element: Linear			
PI (6004)	40274.55	143069.2629298	2148282.4672851
PI (1108)	41508.92	143080.9645000	2149516.7800000
Tangent Direction:	N 89°27'24.62" E		
Tangent Length:	1234.368		
Element: Linear			
PI (1108)	41508.92	143080.9645000	2149516.7800000
EQNBK ( )	41508.92	143080.9645000	2149516.7800000
EQNAHD ( )	A 41500.00	143080.9645000	2149516.7800000
PC (1234)	A 42007.57	143085.7762000	2150024.3309000
Tangent Direction:	N 89°27'24.62" E		
Tangent Length:	507.574		
Element: Circular			
PC (1234)	A 42007.57	143085.7762000	2150024.3309000
PI ( )	A 42259.26	143088.1621331	2150276.0058464
CC (1236)		140221.1160000	2150051.4885000
PT (1237)	A 42509.66	143046.6284000	2150524.2414000
Radius:	2864.789		
Delta:	10°02'30.00" Right		
Degree of Curvature(Arc):	2°00'00.00"		
Length:	502.083		
Tangent:	251.686		
Chord:	501.441		
Middle Ordinate:	10.992		
External:	11.035		
Tangent Direction:	N 89°27'24.62" E		
Radial Direction:	S 0°32'35.38" E		
Chord Direction:	S 85°31'20.38" E		
Radial Direction:	S 9°29'54.62" W		
Tangent Direction:	S 80°30'05.38" E		
Element: Linear			
PT (1237)	A 42509.66	143046.6284000	2150524.2414000
PI (1103)	A 42814.28	142996.3594000	2150824.6854000
Tangent Direction:	S 80°30'05.40" E		
Tangent Length:	304.620		
Element: Linear			
PI (1103)	A 42814.28	142996.3594000	2150824.6854000
PI (1227)	A 42912.77	142980.1053000	2150921.8313000
Tangent Direction:	S 80°30'05.26" E		
Tangent Length:	98.496		
Element: Linear			
PI (1227)	A 42912.77	142980.1053000	2150921.8313000
PC (1238)	A 43128.35	142944.5298000	2151134.4563000
Tangent Direction:	S 80°30'05.40" E		
Tangent Length:	215.581		
Element: Circular			
PC (1238)	A 43128.35	142944.5298000	2151134.4563000
PI ( )	A 43376.68	142903.5502795	2151379.3794794
CC (1239)		145770.0422000	2151607.2092000
PT (1240)	A 43623.77	142905.3265000	2151627.7003000

POE & ASSOCIATES, OKLAHOMA CITY, OK

Project Name: EC-1060*Crossroads
Description: survey alg for Crossroads Interchange
Horizontal Alignment Name: CL SURVEYA034 *CONTINUED
Description: PF2-Plan5
Style: Default

	STATION	NORTHING	EASTING
CURVE DATA CONTINUED:			
Radius:	2864.789		
Delta:	9°54'29.99" Left		
Degree of Curvature(Arc):	2°00'00.00"		
Length:	495.417		
Tangent:	248.327		
Chord:	494.799		
Middle Ordinate:	10.703		
External:	10.743		
Tangent Direction:	S 80°30'05.38" E		
Radial Direction:	S 9°29'54.62" W		
Chord Direction:	S 85°27'20.35" E		
Radial Direction:	S 0°24'35.37" E		
Tangent Direction:	N 89°35'24.63" E		
Element: Linear			
PT (1240)	A 43623.77	142905.3265000	2151627.7003000
PI (1113)	A 44100.00	142908.7329000	2152103.9174000
Tangent Direction:	N 89°35'24.60" E		
Tangent Length:	476.229		
Element: Linear			
PI (1113)	A 44100.00	142908.7329000	2152103.9174000
PI (6247)	A 44514.61	142911.6985623	2152518.5190582
Tangent Direction:	N 89°35'24.60" E		
Tangent Length:	414.612		
Element: Linear			
PI (6247)	A 44514.61	142911.6985623	2152518.5190582
PI (6248)	A 45050.00	142915.5281143	2153053.8930971
Tangent Direction:	N 89°35'24.60" E		
Tangent Length:	535.388		
Element: Linear			
PI (6248)	A 45050.00	142915.5281143	2153053.8930971
PI (6005)	A 45566.73	142919.2241992	2153570.6083609
Tangent Direction:	N 89°35'24.60" E		
Tangent Length:	516.729		
Element: Linear			
PI (6005)	A 45566.73	142919.2241992	2153570.6083609
PI (6329)	A 46000.00	142922.3233285	2154003.8687942
Tangent Direction:	N 89°35'24.60" E		
Tangent Length:	433.272		
Element: Linear			
PI (6329)	A 46000.00	142922.3233285	2154003.8687942
PC (6105)	A 46307.99	142924.5263286	2154311.8497422
Tangent Direction:	N 89°35'24.60" E		
Tangent Length:	307.989		
Element: Circular			
PC (6105)	A 46307.99	142924.5263286	2154311.8497422
PI ( )	A 46891.34	142928.6989727	2154895.1883068
CC (6106)		85630.2125697	2154721.6782651
PT (6107)	A 47474.66	142920.9935309	2155478.4909044
Radius:	57295.780		
Delta:	1°10'00.00" Right		
Degree of Curvature(Arc):	0°06'00.00"		
Length:	1166.667		
Tangent:	583.353		
Chord:	1166.647		
Middle Ordinate:	2.969		
External:	2.970		
Tangent Direction:	N 89°35'24.60" E		
Radial Direction:	S 0°24'35.40" E		
Chord Direction:	S 89°49'35.40" E		
Radial Direction:	S 0°45'24.60" W		
Tangent Direction:	S 89°14'35.40" E		
Element: Linear			
PT (6107)	A 47474.66	142920.9935309	2155478.4909044
PI (6000)	A 48214.52	142911.2208020	2156218.2873130
Tangent Direction:	S 89°14'35.40" E		
Tangent Length:	739.861		
Element: Linear			
PI (6000)	A 48214.52	142911.2208020	2156218.2873130
POE (6052)	A 50014.57	142887.4440979	2158018.1858307
Tangent Direction:	S 89°14'35.40" E		
Tangent Length:	1800.056		

PLS			POE & ASSOCIATES, OKLAHOMA CITY, OK SURVEY DIVISION
DRAWN			SURVEY DATA SHEET
CHECKED			
APPROVED			
CREW	POE		SWO 292XII PROJECT NO. 09032(17) SHEET NO. SD12

OKLAHOMA COUNTY

Project Name: EC-1060*Crossroads
Description: survey alg for Crossroads Interchange
Horizontal Alignment Name: A001
Description: NW of I-240
Style: Default

	STATION	NORTHING	EASTING
Element: Linear			
P.O.B. STA. (6400)	376+33.52	143186.1800	2145640.2073
PC. STA. (6460)	380+38.84	143172.6818	2146045.3005
Tangent Direction:	S 88°05'29.53" E		
Tangent Length:	405.32		
Element: Circular			
PC. STA. (6460)	380+38.84	143172.6818	2146045.3005
P.I. STA. ( )	381+00.14	143170.6403	2146106.5665
C.C. STA. (6441)		146035.8817	2146140.7062
P.T. STA. (6458)	381+61.42	143171.2215	2146167.8638
Radius:	2864.79		
Delta:	2°27'05.86" Left		
Degree of Curvature(Arc):	2°00'00.00"		
Length:	122.58		
Tangent:	61.30		
Chord:	122.57		
Middle Ordinate:	0.66		
External:	0.66		
Tangent Direction:	S 88°05'29.52" E		
Radial Direction:	S 1°54'30.48" W		
Chord Direction:	S 89°19'02.45" E		
Radial Direction:	S 0°32'35.38" E		
Tangent Direction:	N 89°27'24.62" E		
Element: Linear			
P.T. STA. (6458)	381+61.42	143171.2215	2146167.8638
PC. STA. (6459)	386+28.07	143166.7977	2146634.4928
Tangent Direction:	S 89°27'24.62" E		
Tangent Length:	466.65		
Element: Circular			
PC. STA. (6459)	386+28.07	143166.7977	2146634.4928
P.I. STA. ( )	387+50.12	143167.9547	2146756.5375
C.C. STA. (6446)		148896.1183	2146580.1776
P.T. STA. (6461)	388+72.13	143174.3079	2146878.4222
Radius:	5729.58		
Delta:	2°26'26.28" Left		
Degree of Curvature(Arc):	1°00'00.00"		
Length:	244.06		
Tangent:	122.05		
Chord:	244.04		
Middle Ordinate:	1.30		
External:	1.30		
Tangent Direction:	N 89°27'24.62" E		
Radial Direction:	S 0°32'35.38" E		
Chord Direction:	N 88°14'11.48" E		
Radial Direction:	S 2°59'01.66" E		
Tangent Direction:	N 87°00'58.34" E		
Element: Linear			
P.T. STA. (6461)	388+72.13	143174.3079	2146878.4222
P.I. STA. (6439)	393+01.32	143196.6485	2147307.0260
Tangent Direction:	N 87°00'58.35" E		
Tangent Length:	429.19		
Element: Linear			
P.I. STA. (6439)	393+01.32	143196.6485	2147307.0260
PC. STA. (6468)	399+09.25	143182.2355	2147914.7851
Tangent Direction:	S 88°38'29.38" E		
Tangent Length:	607.93		
Element: Circular			
PC. STA. (6468)	399+09.25	143182.2355	2147914.7851
P.I. STA. ( )	400+04.34	143179.9811	2148009.8505
C.C. STA. (6447)		148910.2031	2148050.6230
P.T. STA. (6469)	400+99.42	143180.8825	2148104.9383
Radius:	5729.58		
Delta:	1°54'06.00" Left		
Degree of Curvature(Arc):	1°00'00.00"		
Length:	190.17		
Tangent:	95.09		
Chord:	190.16		
Middle Ordinate:	0.79		
External:	0.79		
Tangent Direction:	S 88°38'29.38" E		
Radial Direction:	S 1°21'30.62" W		
Chord Direction:	S 89°35'32.38" E		
Radial Direction:	S 0°32'35.38" E		
Tangent Direction:	N 89°27'24.62" E		
Element: Linear			
P.T. STA. (6469)	400+99.42	143180.8825	2148104.9383
PC. STA. (6470)	420+19.84	143199.0877	2150025.2720
Tangent Direction:	N 89°27'24.62" E		
Tangent Length:	1920.42		

Project Name: EC-1060*Crossroads
Description: survey alg for Crossroads Interchange
Horizontal Alignment Name: A001 *CONTINUED
Description: NW of I-240
Style: Default

	STATION	NORTHING	EASTING
Element: Circular			
PC. STA. (6470)	420+19.84	143199.0877	2150025.2720
P.I. STA. ( )	421+66.99	143200.4825	2150172.4244
C.C. STA. (6364)		143557.1717	2150021.8780
P.T. STA. (6558)	422+99.09	143304.9437	2150276.0760
Radius:	358.10		
Delta:	44°40'47.38" Left		
Degree of Curvature(Arc):	15°59'59.78"		
Length:	279.25		
Tangent:	147.16		
Chord:	272.23		
Middle Ordinate:	26.88		
External:	29.06		
Tangent Direction:	N 89°27'25.00" E		
Radial Direction:	S 0°32'35.00" E		
Chord Direction:	N 67°07'01.31" E		
Radial Direction:	S 45°13'22.38" E		
Tangent Direction:	N 44°46'37.62" E		
Element: Linear			
P.T. STA. (6558)	422+99.09	143304.9437	2150276.0760
PC. STA. (6559)	426+85.79	143579.4435	2150548.4484
Tangent Direction:	N 44°46'37.62" E		
Tangent Length:	386.70		
Element: Circular			
PC. STA. (6559)	426+85.79	143579.4435	2150548.4484
P.I. STA. ( )	428+07.95	143666.1653	2150634.4983
C.C. STA. (6365)		143831.6717	2150294.2506
P.T. STA. (6560)	429+21.26	143787.3969	2150649.6031
Radius:	358.10		
Delta:	37°40'30.20" Left		
Degree of Curvature(Arc):	15°59'59.78"		
Length:	235.47		
Tangent:	122.17		
Chord:	231.25		
Middle Ordinate:	19.18		
External:	20.27		
Tangent Direction:	N 44°46'37.82" E		
Radial Direction:	S 45°13'22.18" E		
Chord Direction:	N 25°56'22.72" E		
Radial Direction:	S 82°53'52.38" E		
Tangent Direction:	N 7°06'07.62" E		
Element: Linear			
P.T. STA. (6560)	429+21.26	143787.3969	2150649.6031
PC. STA. (6561)	430+60.23	143925.3006	2150666.7851
Tangent Direction:	N 7°06'07.62" E		
Tangent Length:	138.97		
Element: Circular			
PC. STA. (6561)	430+60.23	143925.3006	2150666.7851
P.I. STA. ( )	432+47.35	144110.9869	2150689.9205
C.C. STA. (6366)		144280.8280	2147813.3011
P.T. STA. (6555)	434+33.94	144298.1055	2150688.7962
Radius:	2875.55		
Delta:	7°26'46.96" Left		
Degree of Curvature(Arc):	1°59'33.06"		
Length:	373.72		
Tangent:	187.12		
Chord:	373.45		
Middle Ordinate:	6.07		
External:	6.08		
Tangent Direction:	N 7°06'07.63" E		
Radial Direction:	S 82°53'52.37" E		
Chord Direction:	N 3°22'44.15" E		
Radial Direction:	N 89°39'20.67" E		
Tangent Direction:	N 0°20'39.33" W		
Element: Linear			
P.T. STA. (6555)	434+33.94	144298.1055	2150688.7962
PC. STA. (6556)	436+04.58	144468.7364	2150687.7709
Tangent Direction:	N 0°20'39.33" W		
Tangent Length:	170.63		
Element: Circular			
PC. STA. (6556)	436+04.58	144468.7364	2150687.7709
P.I. STA. ( )	436+42.83	144506.9863	2150687.5429
C.C. STA. (6367)		144457.3315	2148774.4629
P.T. STA. (6552)	436+81.07	144545.1966	2150685.7864
Radius:	1913.34		
Delta:	2°17'26.00" Left		
Degree of Curvature(Arc):	2°59'40.34"		
Length:	76.49		
Tangent:	38.25		
Chord:	76.49		
Middle Ordinate:	0.38		
External:	0.38		
Tangent Direction:	N 0°20'29.49" W		
Radial Direction:	N 89°39'30.51" E		
Chord Direction:	N 1°29'12.49" W		
Radial Direction:	N 87°22'04.51" E		
Tangent Direction:	N 2°37'55.49" W		

POE & ASSOCIATES, OKLAHOMA CITY, OK

Project Name: EC-1060*Crossroads
Description: survey alg for Crossroads Interchange
Horizontal Alignment Name: A001 *CONTINUED
Description: NW of I-240
Style: Default

	STATION	NORTHING	EASTING
Element: Linear			
P.T. STA. (6552)	436+81.07	144545.1966	2150685.7864
PC. STA. (6506)	441+12.94	144976.8538	2150672.2925
Tangent Direction:	N 1°47'25.87" W		
Tangent Length:	431.87		
Element: Circular			
PC. STA. (6506)	441+12.94	144976.8538	2150672.2925
P.I. STA. ( )	441+51.12	145014.9945	2150670.5373
C.C. STA. (6413)		145064.6501	2152580.1324
P.T. STA. (6505)	441+89.29	145053.1750	2150670.3079
Radius:	1909.86		
Delta:	2°17'26.03" Right		
Degree of Curvature(Arc):	3°00'00.00"		
Length:	76.35		
Tangent:	38.18		
Chord:	76.35		
Middle Ordinate:	0.38		
External:	0.38		
Tangent Direction:	N 2°38'05.34" W		
Radial Direction:	N 87°21'54.66" E		
Chord Direction:	N 1°29'22.33" W		
Radial Direction:	N 89°39'20.68" E		
Tangent Direction:	N 0°20'39.32" W		
Element: Linear			
P.T. STA. (6505)	441+89.29	145053.1750	2150670.3079
P.I. STA. (6504)	447+72.66	145636.5344	2150666.8028
Tangent Direction:	N 0°20'39.33" W		
Tangent Length:	583.37		
Element: Linear			
P.I. STA. (6504)	447+72.66	145636.5344	2150666.8028
PC. STA. (6507)	453+85.93	146249.7950	2150663.1180
Tangent Direction:	N 0°20'39.33" W		
Tangent Length:	613.27		
Element: Circular			
PC. STA. (6507)	453+85.93	146249.7950	2150663.1180
P.I. STA. ( )	454+66.43	146330.2904	2150662.6343
C.C. STA. (6414)		146261.2704	2152572.9425
P.T. STA. (6508)	455+46.83	146410.5411	2150668.9258
Radius:	1909.86		
Delta:	4°49'37.05" Right		
Degree of Curvature(Arc):	3°00'00.00"		
Length:	160.90		
Tangent:	80.50		
Chord:	160.85		
Middle Ordinate:	1.69		
External:	1.70		
Tangent Direction:	N 0°20'39.35" W		
Radial Direction:	N 89°39'20.65" E		
Chord Direction:	N 2°04'09.17" E		
Radial Direction:	S 85°31'02.31" E		
Tangent Direction:	N 4°28'57.69" E		
Element: Linear			
P.T. STA. (6508)	455+46.83	146410.5411	2150668.9258
PC. STA. (6536)	459+13.08	146775.6707	2150697.5511
Tangent Direction:	N 4°28'57.67" E		
Tangent Length:	366.25		
Element: Circular			
PC. STA. (6536)	459+13.08	146775.6707	2150697.5511
P.I. STA. ( )	463+76.74	147237.9132	2150733.7898
C.C. STA. (6411)		146327.8591	2156409.6023
P.T. STA. (6537)	468+38.38	147688.3138	2150843.8834
Radius:	5729.58		
Delta:	9°15'10.99" Right		
Degree of Curvature(Arc):	1°00'00.00"		
Length:	925.31		
Tangent:	463.66		
Chord:	924.30		
Middle Ordinate:	18.67		
External:	18.73		
Tangent Direction:	N 4°28'57.68" E		
Radial Direction:	S 85°31'02.32" E		
Chord Direction:	N 9°06'33.17" E		
Radial Direction:	S 76°15'51.34" E		
Tangent Direction:	N 13°44'08.66" E		
Element: Linear			
P.T. STA. (6537)	468+38.38	147688.3138	2150843.8834
PC. STA. (6538)	469+05.70	147753.7085	2150859.8681
Tangent Direction:	N 13°44'08.67" E		
Tangent Length:	67.32		

PLS			POE & ASSOCIATES, OKLAHOMA CITY, OK SURVEY DIVISION
DRAWN			**SURVEY DATA SHEET**
CHECKED			
APPROVED			
CREW	POE		SWO 2923(11) PROJECT NO. 05032(17) SHEET NO. SD13

OKLAHOMA COUNTY

SDS 13 OF 46

Project Name: EC-1060*Crossroads
Description: survey alg for Crossroads Interchange
Horizontal Alignment Name: A001 *CONTINUED
Description: NW of I-240
Style: Default

	STATION	NORTHING	EASTING
Element: Circular			
PC. STA. (6538)	469+05.70	147753.7085	2150859.8681
P.I. STA. ( )	469+76.46	147822.4414	2150876.6688
C.C. STA. (6412)		147889.7540	2150303.2960
P.T. STA. (6539)	470+46.50	147893.1966	2150876.2437
Radius:		572.96	
Delta:		14°04'47.99" Left	
Degree of Curvature(Arc):		9°59'59.99"	
Length:		140.80	
Tangent:		70.76	
Chord:		140.45	
Middle Ordinate:		4.32	
External:		4.35	
Tangent Direction:		N 13°44'08.66" E	
Radial Direction:		S 76°15'51.34" E	
Chord Direction:		N 6°41'44.67" E	
Radial Direction:		N 89°39'20.68" E	
Tangent Direction:		N 0°20'39.32" W	
Element: Linear			
P.T. STA. (6539)	470+46.50	147893.1966	2150876.2437
P.O.E. STA. (6540)	474+37.89	148284.5745	2150873.8921
Tangent Direction:		N 0°20'39.33" W	
Tangent Length:		391.39	

Project Name: EC-1060*Crossroads
Description: survey alg for Crossroads Interchange
Horizontal Alignment Name: A002
Description: NE of I-240
Style: Default

	STATION	NORTHING	EASTING
Element: Circular			
PC. STA. (6546)	76+24.53	143028.0889	2151733.8449
P.I. STA. ( )	77+72.82	143027.0285	2151585.5593
C.C. STA. (6372)		143386.1797	2151731.2842
P.T. STA. (6569)	79+05.71	143131.1121	2151479.9357
Radius:		358.10	
Delta:		44°59'20.18" Right	
Degree of Curvature(Arc):		15°59'59.78"	
Length:		281.18	
Tangent:		148.29	
Chord:		274.01	
Middle Ordinate:		27.25	
External:		29.49	
Tangent Direction:		S 89°35'25.04" W	
Radial Direction:		N 0°24'34.96" W	
Chord Direction:		N 67°54'54.87" W	
Radial Direction:		N 44°34'45.22" E	
Tangent Direction:		N 45°25'14.78" W	
Element: Linear			
P.T. STA. (6569)	79+05.71	143131.1121	2151479.9357
PC. STA. (6568)	84+76.40	143526.5975	2151068.4955
Tangent Direction:		N 46°07'57.79" W	
Tangent Length:		570.69	
Element: Circular			
PC. STA. (6568)	84+76.40	143526.5975	2151068.4955
P.I. STA. ( )	86+11.17	143621.1908	2150972.5032
C.C. STA. (6371)		143781.6644	2151319.8448
P.T. STA. (6567)	87+34.20	143755.6014	2150962.6946
Radius:		358.10	
Delta:		41°14'48.62" Right	
Degree of Curvature(Arc):		15°59'59.78"	
Length:		257.79	
Tangent:		134.77	
Chord:		252.26	
Middle Ordinate:		22.95	
External:		24.52	
Tangent Direction:		N 45°25'14.14" W	
Radial Direction:		N 44°34'45.86" E	
Chord Direction:		N 24°47'49.83" W	
Radial Direction:		N 85°49'34.48" E	
Tangent Direction:		N 4°10'25.52" W	
Element: Linear			
P.T. STA. (6567)	87+34.20	143755.6014	2150962.6946
PC. STA. (6566)	89+99.38	144020.0781	2150943.3946
Tangent Direction:		N 4°10'25.33" W	
Tangent Length:		265.18	

Project Name: EC-1060*Crossroads
Description: survey alg for Crossroads Interchange
Horizontal Alignment Name: A002 *CONTINUED
Description: NE of I-240
Style: Default

	STATION	NORTHING	EASTING
Element: Circular			
PC. STA. (6566)	89+99.38	144020.0781	2150943.3946
P.I. STA. ( )	90+95.15	144115.5961	2150936.4243
C.C. STA. (6370)		144228.5790	2153800.5872
P.T. STA. (6565)	91+90.85	144211.3663	2150935.8489
Radius:		2864.79	
Delta:		3°49'46.02" Right	
Degree of Curvature(Arc):		2°00'00.00"	
Length:		191.47	
Tangent:		95.77	
Chord:		191.44	
Middle Ordinate:		1.60	
External:		1.60	
Tangent Direction:		N 4°10'25.34" W	
Radial Direction:		N 85°49'34.66" E	
Chord Direction:		N 2°15'32.33" W	
Radial Direction:		N 89°39'20.68" E	
Tangent Direction:		N 0°20'39.32" W	
Element: Linear			
P.T. STA. (6565)	91+90.85	144211.3663	2150935.8489
PC. STA. (6564)	94+31.50	144452.0120	2150937.2948
Tangent Direction:		N 0°20'39.33" E	
Tangent Length:		240.65	
Element: Circular			
PC. STA. (6564)	94+31.50	144452.0120	2150937.2948
P.I. STA. ( )	94+95.08	144515.5946	2150936.9128
C.C. STA. (6369)		144463.4872	2152847.1203
P.T. STA. (6563)	95+58.62	144579.0617	2150940.7605
Radius:		1909.86	
Delta:		3°48'49.01" Right	
Degree of Curvature(Arc):		3°00'00.00"	
Length:		127.12	
Tangent:		63.58	
Chord:		127.10	
Middle Ordinate:		1.06	
External:		1.06	
Tangent Direction:		N 0°20'39.33" W	
Radial Direction:		N 89°39'20.67" E	
Chord Direction:		N 1°33'45.17" E	
Radial Direction:		S 86°31'50.33" E	
Tangent Direction:		N 3°28'09.67" E	
Element: Linear			
P.T. STA. (6563)	95+58.62	144579.0617	2150940.7605
PC. STA. (6562)	97+32.13	144752.2538	2150951.2604
Tangent Direction:		N 3°28'09.67" E	
Tangent Length:		173.51	
Element: Circular			
PC. STA. (6562)	97+32.13	144752.2538	2150951.2604
P.I. STA. ( )	97+95.71	144815.8374	2150951.1984
C.C. STA. (6368)		144754.1149	2152861.1195
P.T. STA. (6526)	98+59.25	144879.2844	2150955.3656
Radius:		1909.86	
Delta:		3°48'49.01" Right	
Degree of Curvature(Arc):		3°00'00.00"	
Length:		127.12	
Tangent:		63.58	
Chord:		127.10	
Middle Ordinate:		1.06	
External:		1.06	
Tangent Direction:		N 0°03'21.00" W	
Radial Direction:		N 89°56'39.00" E	
Chord Direction:		N 1°51'03.50" E	
Radial Direction:		S 86°14'32.00" E	
Tangent Direction:		N 3°45'28.00" E	
Element: Linear			
P.T. STA. (6526)	98+59.25	144879.2844	2150955.3656
PC. STA. (6527)	102+35.73	145255.7576	2150953.1036
Tangent Direction:		N 0°20'39.33" W	
Tangent Length:		376.48	
Element: Circular			
PC. STA. (6527)	102+35.73	145255.7576	2150953.1036
P.I. STA. ( )	102+95.67	145315.6976	2150952.7434
C.C. STA. (6415)		145267.2329	2152862.9281
P.T. STA. (6532)	103+55.57	145375.5421	2150956.1427
Radius:		1909.86	
Delta:		3°35'43.01" Right	
Degree of Curvature(Arc):		3°00'00.00"	
Length:		119.84	
Tangent:		59.94	
Chord:		119.82	
Middle Ordinate:		0.94	
External:		0.94	
Tangent Direction:		N 0°20'39.33" W	
Radial Direction:		N 89°39'20.67" E	
Chord Direction:		N 1°27'12.17" E	
Radial Direction:		S 86°44'56.33" E	
Tangent Direction:		N 3°15'03.67" E	

POE & ASSOCIATES, OKLAHOMA CITY, OK

Project Name: EC-1060*Crossroads
Description: survey alg for Crossroads Interchange
Horizontal Alignment Name: A002 *CONTINUED
Description: NE of I-240
Style: Default

	STATION	NORTHING	EASTING
Element: Linear			
P.T. STA. (6532)	103+55.57	145375.5421	2150956.1427
PC. STA. (6533)	105+52.52	145572.1751	2150967.3119
Tangent Direction:		N 3°15'03.67" E	
Tangent Length:		196.95	
Element: Circular			
PC. STA. (6533)	105+52.52	145572.1751	2150967.3119
P.I. STA. ( )	106+18.55	145638.0917	2150971.0560
C.C. STA. (6421)		145637.1605	2149823.2400
P.T. STA. (6534)	106+84.42	145704.0021	2150967.2049
Radius:		1145.92	
Delta:		6°35'41.96" Left	
Degree of Curvature(Arc):		4°59'59.99"	
Length:		131.90	
Tangent:		66.02	
Chord:		131.83	
Middle Ordinate:		1.90	
External:		1.90	
Tangent Direction:		N 3°15'03.65" E	
Radial Direction:		S 86°44'56.35" E	
Chord Direction:		N 0°02'47.33" W	
Radial Direction:		N 86°39'21.69" E	
Tangent Direction:		N 3°20'38.31" W	
Element: Linear			
P.T. STA. (6534)	106+84.42	145704.0021	2150967.2049
PC. STA. (6535)	109+46.62	145965.7557	2150951.9107
Tangent Direction:		N 3°20'38.33" W	
Tangent Length:		262.20	
Element: Circular			
PC. STA. (6535)	109+46.62	145965.7557	2150951.9107
P.I. STA. ( )	109+96.64	146015.6788	2150948.7650
C.C. STA. (6420)		146085.8607	2152857.9894
P.T. STA. (6529)	110+46.64	146065.6982	2150948.2369
Radius:		1909.86	
Delta:		3°00'02.32" Right	
Degree of Curvature(Arc):		3°00'00.00"	
Length:		100.02	
Tangent:		50.02	
Chord:		100.01	
Middle Ordinate:		0.65	
External:		0.65	
Tangent Direction:		N 3°36'19.91" W	
Radial Direction:		N 86°23'40.09" E	
Chord Direction:		N 2°06'18.75" W	
Radial Direction:		N 89°23'42.41" E	
Tangent Direction:		N 0°36'17.59" W	
Element: Linear			
P.T. STA. (6529)	110+46.64	146065.6982	2150948.2369
P.I. STA. (6530)	113+11.92	146330.9734	2150946.6430
Tangent Direction:		N 0°20'39.33" W	
Tangent Length:		265.28	
Element: Linear			
P.I. STA. (6530)	113+11.92	146330.9734	2150946.6430
P.I. STA. (6531)	115+89.26	146608.2221	2150939.5305
Tangent Direction:		N 1°28'10.33" W	
Tangent Length:		277.34	
Element: Linear			
P.I. STA. (6531)	115+89.26	146608.2221	2150939.5305
PC. STA. (6545)	116+79.37	146697.9714	2150931.5540
Tangent Direction:		N 5°04'43.68" W	
Tangent Length:		90.10	
Element: Circular			
PC. STA. (6545)	116+79.37	146697.9714	2150931.5540
P.I. STA. ( )	120+23.70	147042.2975	2150929.5169
C.C. STA. (6409)		146714.9196	2153796.2929
P.T. STA. (6544)	123+64.74	147377.2992	2151009.1314
Radius:		2864.79	
Delta:		13°42'27.10" Right	
Degree of Curvature(Arc):		2°00'00.00"	
Length:		685.38	
Tangent:		344.33	
Chord:		683.74	
Middle Ordinate:		20.47	
External:		20.62	
Tangent Direction:		N 0°20'20.28" W	
Radial Direction:		N 89°39'39.72" E	
Chord Direction:		N 6°30'53.27" E	
Radial Direction:		S 76°37'53.18" E	
Tangent Direction:		N 13°22'06.82" E	

PLS		
DRAWN		
CHECKED		
APPROVED		
CREW	POE	

POE & ASSOCIATES, OKLAHOMA CITY, OK
SURVEY DIVISION

SURVEY DATA SHEET

SWO 292311 PROJECT NO. 09032(17) SHEET NO. SD14

OKLAHOMA COUNTY

Project Name: EC-1060*Crossroads
Description: survey alg for Crossroads Interchange
Horizontal Alignment Name: A002 *CONTINUED
Description: NE of I-240
Style: Default

	STATION	NORTHING	EASTING
Element: Linear			
P.T. STA. (6544)	123+64.74	147377.2992	2151009.1314
PC. STA. (6543)	128+04.01	147804.6215	2151110.8596
Tangent Direction:	N 13°23'26.03" E		
Tangent Length:	439.26		
Element: Circular			
PC. STA. (6543)	128+04.01	147804.6215	2151110.8596
P.I. STA. ( )	130+02.52	147997.8231	2151156.4506
C.C. STA. (6410)	147475.6452	2152504.9640	
P.T. STA. (6542)	131+98.51	148171.3450	2151252.8640
Radius:	1432.39		
Delta:	15°46'48.47" Right		
Degree of Curvature(Arc):	4°00'00.00"		
Length:	394.50		
Tangent:	198.51		
Chord:	393.26		
Middle Ordinate:	13.56		
External:	13.69		
Tangent Direction:	N 13°16'39.27" E		
Radial Direction:	S 76°43'20.73" E		
Chord Direction:	N 21°10'03.50" E		
Radial Direction:	S 60°56'32.26" E		
Tangent Direction:	N 29°03'27.74" E		
Element: Linear			
P.T. STA. (6542)	131+98.51	148171.3450	2151252.8640
P.O.E. STA. (6541)	133+30.53	148286.6956	2151317.0767
Tangent Direction:	N 29°06'12.80" E		
Tangent Length:	132.02		

Project Name: EC-1060*Crossroads
Description: survey alg for Crossroads Interchange
Horizontal Alignment Name: A003
Description: SW of I-240
Style: Default

	STATION	NORTHING	EASTING
Element: Linear			
P.O.B. STA. (6401)	376+33.30	142892.2896	2145642.7792
PC. STA. (6440)	380+08.81	142919.8975	2146017.2679
Tangent Direction:	N 85°47'01.31" E		
Tangent Length:	375.51		
Element: Circular			
PC. STA. (6440)	380+08.81	142919.8975	2146017.2679
P.I. STA. ( )	381+00.67	142926.6512	2146108.8795
C.C. STA. (6449)	140062.8618	2146227.8930	
P.T. STA. (6442)	381+92.46	142927.5220	2146200.7356
Radius:	2864.79		
Delta:	3°40'23.34" Right		
Degree of Curvature(Arc):	2°00'00.00"		
Length:	183.66		
Tangent:	91.86		
Chord:	183.63		
Middle Ordinate:	1.47		
External:	1.47		
Tangent Direction:	N 85°47'01.30" E		
Radial Direction:	S 4°12'58.70" E		
Chord Direction:	N 87°37'12.97" E		
Radial Direction:	S 0°32'35.36" E		
Tangent Direction:	N 89°27'24.64" E		
Element: Linear			
P.T. STA. (6442)	381+92.46	142927.5220	2146200.7356
PC. STA. (6443)	387+15.96	142932.4847	2146724.2120
Tangent Direction:	N 89°27'24.62" E		
Tangent Length:	523.50		
Element: Circular			
PC. STA. (6443)	387+15.96	142932.4847	2146724.2120
P.I. STA. ( )	388+00.60	142933.2871	2146808.8480
C.C. STA. (6448)	139112.9373	2146760.4221	
P.T. STA. (6445)	388+85.21	142930.3397	2146893.4365
Radius:	3819.72		
Delta:	2°32'19.60" Right		
Degree of Curvature(Arc):	1°30'00.00"		
Length:	169.25		
Tangent:	84.64		
Chord:	169.24		
Middle Ordinate:	0.94		
External:	0.94		
Tangent Direction:	N 89°27'24.63" E		
Radial Direction:	S 0°32'35.37" E		
Chord Direction:	S 89°16'25.57" E		
Radial Direction:	S 1°59'44.23" W		
Tangent Direction:	S 88°00'15.77" E		
Element: Linear			
P.T. STA. (6445)	388+85.21	142930.3397	2146893.4365
P.I. STA. (6405)	393+92.35	142912.6797	2147400.2609
Tangent Direction:	S 88°00'15.76" E		
Tangent Length:	507.13		

Project Name: EC-1060*Crossroads
Description: survey alg for Crossroads Interchange
Horizontal Alignment Name: A003 *CONTINUED
Description: SW of I-240
Style: Default

	STATION	NORTHING	EASTING
Element: Linear			
P.I. STA. (6405)	393+92.35	142912.6797	2147400.2609
PC. STA. (6471)	401+13.38	142944.0411	2148120.6085
Tangent Direction:	N 87°30'25.62" E		
Tangent Length:	721.03		
Element: Circular			
PC. STA. (6471)	401+13.38	142944.0411	2148120.6085
P.I. STA. ( )	401+62.12	142946.1614	2148169.3099
C.C. STA. (6462)	140081.9633	2148245.2132	
P.T. STA. (6472)	402+10.86	142946.6236	2148218.0553
Radius:	2864.79		
Delta:	1°56'58.97" Right		
Degree of Curvature(Arc):	2°00'00.00"		
Length:	97.49		
Tangent:	48.75		
Chord:	97.48		
Middle Ordinate:	0.41		
External:	0.41		
Tangent Direction:	N 87°30'25.63" E		
Radial Direction:	S 2°29'34.37" E		
Chord Direction:	N 88°28'55.12" E		
Radial Direction:	S 0°32'35.39" E		
Tangent Direction:	N 89°27'24.61" E		
Element: Linear			
P.T. STA. (6472)	402+10.86	142946.6236	2148218.0553
PC. STA. (6473)	419+18.11	142962.8080	2149925.2286
Tangent Direction:	N 89°27'24.62" E		
Tangent Length:	1707.25		
Element: Circular			
PC. STA. (6473)	419+18.11	142962.8080	2149925.2286
P.I. STA. ( )	420+73.29	142964.2786	2150080.3967
C.C. STA. (6528)	142604.7240	2149928.6225	
P.T. STA. (6576)	422+10.97	142852.0661	2150187.5772
Radius:	358.10		
Delta:	46°51'25.05" Right		
Degree of Curvature(Arc):	15°59'59.78"		
Length:	292.86		
Tangent:	155.18		
Chord:	284.76		
Middle Ordinate:	29.52		
External:	32.18		
Tangent Direction:	N 89°27'25.09" E		
Radial Direction:	S 0°32'34.91" E		
Chord Direction:	S 67°06'52.38" E		
Radial Direction:	S 46°18'50.15" W		
Tangent Direction:	S 43°41'09.85" E		
Element: Linear			
P.T. STA. (6576)	422+10.97	142852.0661	2150187.5772
PC. STA. (6589)	427+48.96	142470.3461	2150566.6923
Tangent Direction:	S 44°48'13.83" E		
Tangent Length:	537.99		
Element: Circular			
PC. STA. (6589)	427+48.96	142470.3461	2150566.6923
P.I. STA. ( )	428+69.64	142383.0775	2150650.0467
C.C. STA. (6510)	142223.0052	2150307.7366	
P.T. STA. (6557)	429+81.76	142263.1581	2150663.5783
Radius:	358.10		
Delta:	37°14'52.21" Right		
Degree of Curvature(Arc):	15°59'59.78"		
Length:	232.80		
Tangent:	120.68		
Chord:	228.72		
Middle Ordinate:	18.75		
External:	19.79		
Tangent Direction:	S 43°41'08.98" E		
Radial Direction:	S 46°18'51.02" W		
Chord Direction:	S 25°03'42.87" E		
Radial Direction:	S 83°33'43.24" W		
Tangent Direction:	S 6°26'16.76" E		
Element: Linear			
P.T. STA. (6557)	429+81.76	142263.1581	2150663.5783
PC. STA. (6554)	432+73.33	141973.4268	2150696.2709
Tangent Direction:	S 6°26'16.37" E		
Tangent Length:	291.57		

Project Name: EC-1060*Crossroads
Description: survey alg for Crossroads Interchange
Horizontal Alignment Name: A003 *CONTINUED
Description: SW of I-240
Style: Default

	STATION	NORTHING	EASTING
Element: Linear			
P.O.B. STA. (6401)	376+33.30	142892.2896	2145642.7792
PC. STA. (6440)	380+08.81	142919.8975	2146017.2679
Tangent Direction:	N 85°47'01.31" E		
Tangent Length:	375.51		
Element: Circular			
PC. STA. (6440)	380+08.81	142919.8975	2146017.2679
P.I. STA. ( )	381+00.67	142926.6512	2146108.8795
C.C. STA. (6449)	140062.8618	2146227.8930	
P.T. STA. (6442)	381+92.46	142927.5220	2146200.7356
Radius:	2864.79		
Delta:	3°40'23.34" Right		
Degree of Curvature(Arc):	2°00'00.00"		
Length:	183.66		
Tangent:	91.86		
Chord:	183.63		
Middle Ordinate:	1.47		
External:	1.47		
Tangent Direction:	N 85°47'01.30" E		
Radial Direction:	S 4°12'58.70" E		
Chord Direction:	N 87°37'12.97" E		
Radial Direction:	S 0°32'35.36" E		
Tangent Direction:	N 89°27'24.64" E		
Element: Linear			
P.T. STA. (6442)	381+92.46	142927.5220	2146200.7356
PC. STA. (6443)	387+15.96	142932.4847	2146724.2120
Tangent Direction:	N 89°27'24.62" E		
Tangent Length:	523.50		
Element: Circular			
PC. STA. (6443)	387+15.96	142932.4847	2146724.2120
P.I. STA. ( )	388+00.60	142933.2871	2146808.8480
C.C. STA. (6448)	139112.9373	2146760.4221	
P.T. STA. (6445)	388+85.21	142930.3397	2146893.4365
Radius:	3819.72		
Delta:	2°32'19.60" Right		
Degree of Curvature(Arc):	1°30'00.00"		
Length:	169.25		
Tangent:	84.64		
Chord:	169.24		
Middle Ordinate:	0.94		
External:	0.94		
Tangent Direction:	N 89°27'24.63" E		
Radial Direction:	S 0°32'35.37" E		
Chord Direction:	S 89°16'25.57" E		
Radial Direction:	S 1°59'44.23" W		
Tangent Direction:	S 88°00'15.77" E		
Element: Linear			
P.T. STA. (6445)	388+85.21	142930.3397	2146893.4365
P.I. STA. (6405)	393+92.35	142912.6797	2147400.2609
Tangent Direction:	S 88°00'15.76" E		
Tangent Length:	507.13		
Element: Linear			
P.I. STA. (6405)	393+92.35	142912.6797	2147400.2609
PC. STA. (6471)	401+13.38	142944.0411	2148120.6085
Tangent Direction:	N 87°30'25.62" E		
Tangent Length:	721.03		
Element: Circular			
PC. STA. (6471)	401+13.38	142944.0411	2148120.6085
P.I. STA. ( )	401+62.12	142946.1614	2148169.3099
C.C. STA. (6462)	140081.9633	2148245.2132	
P.T. STA. (6472)	402+10.86	142946.6236	2148218.0553
Radius:	2864.79		
Delta:	1°56'58.97" Right		
Degree of Curvature(Arc):	2°00'00.00"		
Length:	97.49		
Tangent:	48.75		
Chord:	97.48		
Middle Ordinate:	0.41		
External:	0.41		
Tangent Direction:	N 87°30'25.63" E		
Radial Direction:	S 2°29'34.37" E		
Chord Direction:	N 88°28'55.12" E		
Radial Direction:	S 0°32'35.39" E		
Tangent Direction:	N 89°27'24.61" E		
Element: Linear			
P.T. STA. (6472)	402+10.86	142946.6236	2148218.0553
PC. STA. (6473)	419+18.11	142962.8080	2149925.2286
Tangent Direction:	N 89°27'24.62" E		
Tangent Length:	1707.25		

POE & ASSOCIATES, OKLAHOMA CITY, OK

PLS		
DRAWN		
CHECKED		
APPROVED		
CREW	POE	

POE & ASSOCIATES, OKLAHOMA CITY, OK
SURVEY DIVISION

SURVEY DATA SHEET

SWO 2923(11) PROJECT NO. 03032(17) SHEET NO. 5015

OKLAHOMA COUNTY

SDS 15 OF 46

Project Name: EC-1060*Crossroads
Description: survey alg for Crossroads Interchange
Horizontal Alignment Name: A003 *CONTINUED
Description: SW of I-240
Style: Default

	STATION	NORTHING	EASTING

Element: Circular

PC. STA. (6473)	419+18.11	142962.8080	2149925.2286
P.I. STA. ( )	420+73.29	142964.2786	2150080.3967
C.C. STA. (6528)		142604.7240	2149928.6225
P.T. STA. (6576)	422+10.97	142852.0661	2150187.5772

Radius: 358.10
Delta: 46°51'25.05" Right
Degree of Curvature(Arc): 15°59'59.78"
Length: 292.86
Tangent: 155.18
Chord: 284.76
Middle Ordinate: 29.52
External: 32.18
Tangent Direction: N 89°27'25.09" E
Radial Direction: S 0°32'34.91" E
Chord Direction: S 67°06'52.38" E
Radial Direction: S 46°18'50.15" W
Tangent Direction: S 43°41'09.85" E

Element: Linear

P.T. STA. (6576)	422+10.97	142852.0661	2150187.5772
PC. STA. (6589)	427+48.96	142470.3461	2150566.6923

Tangent Direction: S 44°48'13.83" E
Tangent Length: 537.99

Element: Circular

PC. STA. (6589)	427+48.96	142470.3461	2150566.6923
P.I. STA. ( )	428+69.64	142383.0775	2150650.0467
C.C. STA. (6510)		142223.0052	2150307.7366
P.T. STA. (6557)	429+81.76	142263.1581	2150663.5783

Radius: 358.10
Delta: 37°14'52.21" Right
Degree of Curvature(Arc): 15°59'59.78"
Length: 232.80
Tangent: 120.68
Chord: 228.72
Middle Ordinate: 18.75
External: 19.79
Tangent Direction: S 43°41'08.98" E
Radial Direction: S 46°18'51.02" W
Chord Direction: S 25°03'42.87" E
Radial Direction: S 83°33'43.24" W
Tangent Direction: S 6°26'16.76" E

Element: Linear

P.T. STA. (6557)	429+81.76	142263.1581	2150663.5783
PC. STA. (6554)	432+73.33	141973.4268	2150696.2709

Tangent Direction: S 6°26'16.37" E
Tangent Length: 291.57

Element: Circular

PC. STA. (6554)	432+73.33	141973.4268	2150696.2709
P.I. STA. ( )	434+21.88	141825.8207	2150712.9264
C.C. STA. (6509)		141652.2095	2147849.5462
P.T. STA. (6553)	435+70.15	141677.2836	2150714.2265

Radius: 2864.79
Delta: 5°56'11.01" Right
Degree of Curvature(Arc): 2°00'00.00"
Length: 296.82
Tangent: 148.54
Chord: 296.69
Middle Ordinate: 3.84
External: 3.85
Tangent Direction: S 6°26'16.38" E
Radial Direction: S 83°33'43.62" W
Chord Direction: S 3°28'10.87" E
Radial Direction: S 89°29'54.64" W
Tangent Direction: S 0°30'05.36" E

Element: Linear

P.T. STA. (6553)	435+70.15	141677.2836	2150714.2265
PC. STA. (6487)	443+08.82	140938.6419	2150720.6918

Tangent Direction: S 0°30'05.37" E
Tangent Length: 738.67

Element: Circular

PC. STA. (6487)	443+08.82	140938.6419	2150720.6918
P.I. STA. ( )	444+21.61	140825.8581	2150721.6789
C.C. STA. (6480)		140921.9258	2148810.9059
P.T. STA. (6488)	445+34.14	140713.7420	2150709.3845

Radius: 1909.86
Delta: 6°45'33.99" Right
Degree of Curvature(Arc): 3°00'00.00"
Length: 225.31
Tangent: 112.79
Chord: 225.18
Middle Ordinate: 3.32
External: 3.33
Tangent Direction: S 0°30'05.36" E
Radial Direction: S 89°29'54.64" W
Chord Direction: S 2°52'41.63" W
Radial Direction: N 83°44'31.38" W
Tangent Direction: S 6°15'28.62" W

Project Name: EC-1060*Crossroads
Description: survey alg for Crossroads Interchange
Horizontal Alignment Name: A003 *CONTINUED
Description: SW of I-240
Style: Default

	STATION	NORTHING	EASTING

Element: Linear

P.T. STA. (6488)	445+34.14	140713.7420	2150709.3845
PC. STA. (6489)	447+71.07	140478.2238	2150683.5580

Tangent Direction: S 6°15'28.63" W
Tangent Length: 236.93

Element: Circular

PC. STA. (6489)	447+71.07	140478.2238	2150683.5580
P.I. STA. ( )	448+88.50	140361.4928	2150670.7574
C.C. STA. (6474)		140353.3134	2151822.6457
P.T. STA. (6490)	450+05.11	140244.5917	2150681.8990

Radius: 1145.92
Delta: 11°42'08.01" Left
Degree of Curvature(Arc): 4°59'59.99"
Length: 234.04
Tangent: 117.43
Chord: 233.64
Middle Ordinate: 5.97
External: 6.00
Tangent Direction: S 6°15'28.64" W
Radial Direction: N 83°44'31.36" W
Chord Direction: S 0°24'24.63" W
Radial Direction: S 84°33'20.62" W
Tangent Direction: S 5°26'39.38" E

Project Name: EC-1060*Crossroads
Description: survey alg for Crossroads Interchange
Horizontal Alignment Name: A004
Description: SE of I-240
Style: Default

	STATION	NORTHING	EASTING

Element: Linear

P.O.B. STA. (6602)	432+87.86	140350.6568	2151008.0977
PC. STA. (6601)	441+57.57	141217.7631	2151075.3830

Tangent Direction: N 4°26'13.63" E
Tangent Length: 869.71

Element: Circular

PC. STA. (6601)	441+57.57	141217.7631	2151075.3830
P.I. STA. ( )	443+16.88	141376.5912	2151087.7076
C.C. STA. (6345)		141276.8667	2150313.7137
P.R.C. STA. (6600)	444+71.68	141527.1081	2151035.5257

Radius: 763.96
Delta: 23°33'28.00" Left
Degree of Curvature(Arc): 7°29'59.46"
Length: 314.11
Tangent: 159.31
Chord: 311.90
Middle Ordinate: 16.09
External: 16.43
Tangent Direction: N 4°26'13.61" E
Radial Direction: S 85°33'46.39" E
Chord Direction: N 7°20'30.39" W
Radial Direction: N 70°52'45.61" E
Tangent Direction: N 19°07'14.39" W

Element: Circular

P.R.C. STA. (6600)	444+71.68	141527.1081	2151035.5257
P.I. STA. ( )	445+96.92	141645.4330	2150994.5042
C.C. STA. (6344)		141777.3488	2151757.3359
P.T. STA. (6599)	447+19.94	141770.6623	2150993.4081

Radius: 763.96
Delta: 18°37'09.04" Right
Degree of Curvature(Arc): 7°29'59.53"
Length: 248.26
Tangent: 125.23
Chord: 247.17
Middle Ordinate: 10.06
External: 10.20
Tangent Direction: N 19°07'14.39" W
Radial Direction: N 70°52'45.61" E
Chord Direction: N 9°48'39.87" W
Radial Direction: N 89°29'54.65" E
Tangent Direction: N 0°30'05.35" W

Element: Linear

P.T. STA. (6599)	447+19.94	141770.6623	2150993.4081
PC. STA. (6598)	451+06.07	142156.7775	2150990.0285

Tangent Direction: N 0°30'05.37" W
Tangent Length: 386.13

Element: Circular

PC. STA. (6598)	451+06.07	142156.7775	2150990.0285
P.I. STA. ( )	453+05.57	142356.2692	2150988.2824
C.C. STA. (6341)		142160.7894	2151448.3809
P.T. STA. (6594)	454+82.40	142493.4960	2151133.0884

Radius: 458.37
Delta: 47°02'27.11" Right
Degree of Curvature(Arc): 12°29'59.63"
Length: 376.33
Tangent: 199.50
Chord: 365.85
Middle Ordinate: 38.08
External: 41.53
Tangent Direction: N 0°30'05.37" W
Radial Direction: N 89°29'54.63" E
Chord Direction: N 23°01'08.18" E
Radial Direction: S 43°27'38.26" E
Tangent Direction: N 46°32'21.74" E

POE & ASSOCIATES, OKLAHOMA CITY, OK

Project Name: EC-1060*Crossroads
Description: survey alg for Crossroads Interchange
Horizontal Alignment Name: A004 *CONTINUED
Description: SE of I-240
Style: Default

	STATION	NORTHING	EASTING

Element: Linear

P.T. STA. (6594)	454+82.40	142493.4960	2151133.0884
PC. STA. (6593)	457+09.27	142649.5476	2151297.7635

Tangent Direction: N 46°32'24.60" E
Tangent Length: 226.87

Element: Circular

PC. STA. (6593)	457+09.27	142649.5476	2151297.7635
P.I. STA. ( )	458+90.06	142773.9006	2151428.9884
C.C. STA. (6343)		142316.8366	2151613.0514
P.T. STA. (6586)	460+53.67	142775.1949	2151609.7699

Radius: 458.37
Delta: 43°02'58.73" Right
Degree of Curvature(Arc): 12°29'59.63"
Length: 344.40
Tangent: 180.79
Chord: 336.36
Middle Ordinate: 31.97
External: 34.36
Tangent Direction: N 46°32'24.60" E
Radial Direction: S 43°27'35.40" E
Chord Direction: N 68°03'53.96" E
Radial Direction: S 0°24'36.67" E
Tangent Direction: N 89°35'23.33" E

Element: Linear

P.T. STA. (6586)	460+53.67	142775.1949	2151609.7699
PC. STA. (6578)	469+86.31	142781.8660	2152542.3861

Tangent Direction: N 89°35'24.60" E
Tangent Length: 932.64

Element: Circular

PC. STA. (6578)	469+86.31	142781.8660	2152542.3861
P.I. STA. ( )	472+93.36	142784.0622	2152849.4253
C.C. STA. (6336)		141635.9753	2152550.5827
P.T. STA. (6577)	475+86.31	142632.4452	2153116.4276

Radius: 1145.92
Delta: 29°59'59.58" Right
Degree of Curvature(Arc): 4°59'59.93"
Length: 600.00
Tangent: 307.05
Chord: 593.17
Middle Ordinate: 39.05
External: 40.42
Tangent Direction: N 89°35'24.60" E
Radial Direction: S 0°24'35.40" E
Chord Direction: S 75°24'35.61" E
Radial Direction: S 29°35'24.18" W
Tangent Direction: S 60°24'35.82" E

Element: Linear

P.T. STA. (6577)	475+86.31	142632.4452	2153116.4276
P.O.E. STA. (6574)	478+93.21	142480.9001	2153383.2928

Tangent Direction: S 60°24'32.44" E
Tangent Length: 306.89

Project Name: EC-1060*Crossroads
Description: survey alg for Crossroads Interchange
Horizontal Alignment Name: A005
Description: RAMP NW of I-240
Style: Default

	STATION	NORTHING	EASTING

Element: Clothoid

T.S. STA. (6685)	419+66.88	143140.8879	2149983.1129
S.P.I. STA. (6300)	420+67.31	143141.8263	2150083.5366
S.C. STA. (6686)	421+17.17	143152.7655	2150132.6419

Entrance Radius: 0.00
Exit Radius: 358.10
Length: 150.29
Angle: 12°01'24.23" Left
Constant: 231.99
Long Tangent: 100.43
Short Tangent: 50.31
Long Chord: 150.00
Xs: 149.63
Ys: 10.48
P: 2.62
K: 75.04
Tangent Direction: N 89°27'52.71" E
Radial Direction: S 0°32'07.29" E
Chord Direction: N 85°27'30.03" E
Radial Direction: S 12°33'31.51" E
Tangent Direction: N 77°26'28.49" E

PLS		POE & ASSOCIATES, OKLAHOMA CITY, OK SURVEY DIVISION
DRAWN		SURVEY DATA SHEET
CHECKED		
APPROVED		
CREW	POE	SWO 2923(11) PROJECT NO. 0903211(7) SHEET NO. SD16

OKLAHOMA COUNTY

Project Name: EC-1060*Crossroads
Description: survey alg for Crossroads Interchange
Horizontal Alignment Name: A005 *CONTINUED
Description: RAMP NW of I-240
Style: Default

	STATION	NORTHING	EASTING
Element: Clothoid			
C.S. STA. (6687)	422+46.42	143202.7522	2150251.0751
S.P.I. STA. (6301)	422+96.73	143230.3049	2150293.1685
S.T. STA. (6688)	423+96.72	143301.6035	2150363.8955
Entrance Radius:	358.10		
Exit Radius:	0.00		
Length:	150.29		
Angle:	12°01'24.22" Left		
Constant:	231.99		
Long Tangent:	100.43		
Short Tangent:	50.31		
Long Chord:	150.00		
Xs:	149.63		
Ys:	10.48		
P:	2.62		
K:	75.04		
Tangent Direction:	N 56°47'34.07" E		
Radial Direction:	S 33°12'25.93" E		
Chord Direction:	N 48°46'32.55" E		
Radial Direction:	S 45°13'50.14" E		
Tangent Direction:	N 44°46'09.86" E		
Element: Linear			
S.T. STA. (6688)	423+96.72	143301.6035	2150363.8955
T.S. STA. (6695)	427+32.09	143556.3197	2150582.0510
Tangent Direction:	N 40°34'44.03" E		
Tangent Length:	335.37		
Element: Clothoid			
T.S. STA. (6695)	427+32.09	143556.3197	2150582.0510
S.P.I. STA. (6302)	428+32.51	143627.6006	2150652.7958
S.C. STA. (6694)	428+82.38	143669.9076	2150680.0193
Entrance Radius:	0.00		
Exit Radius:	358.10		
Length:	150.29		
Angle:	12°01'24.18" Left		
Constant:	231.99		
Long Tangent:	100.43		
Short Tangent:	50.31		
Long Chord:	150.00		
Xs:	149.63		
Ys:	10.48		
P:	2.62		
K:	75.04		
Tangent Direction:	N 44°47'01.42" E		
Radial Direction:	S 45°12'58.58" E		
Chord Direction:	N 40°46'38.74" E		
Radial Direction:	S 57°14'22.77" E		
Tangent Direction:	N 32°45'37.23" E		
Element: Circular			
S.C. STA. (6694)	428+82.38	143669.9076	2150680.0193
P.I. STA. ( )	429+49.14	143726.0371	2150716.1588
C.C. STA. (6399)		143863.7661	2150378.9305
C.S. STA. (6693)	430+14.38	143791.4181	2150729.6460
Radius:	358.10		
Delta:	21°07'11.73" Left		
Degree of Curvature(Arc):	15°59'59.78"		
Length:	132.00		
Tangent:	66.76		
Chord:	131.25		
Middle Ordinate:	6.06		
External:	6.17		
Tangent Direction:	N 32°46'32.87" E		
Radial Direction:	S 57°13'27.13" E		
Chord Direction:	N 22°12'57.00" E		
Radial Direction:	S 78°20'38.87" E		
Tangent Direction:	N 11°39'21.13" E		
Element: Clothoid			
C.S. STA. (6693)	430+14.38	143791.4181	2150729.6460
S.P.I. STA. (6303)	430+64.69	143840.6869	2150739.8235
S.T. STA. (6692)	431+64.67	143941.1131	2150739.2063
Entrance Radius:	358.10		
Exit Radius:	0.00		
Length:	150.29		
Angle:	12°01'24.69" Left		
Constant:	231.99		
Long Tangent:	100.43		
Short Tangent:	50.31		
Long Chord:	150.00		
Xs:	149.63		
Ys:	10.48		
P:	2.62		
K:	75.04		
Tangent Direction:	N 11°40'17.11" E		
Radial Direction:	S 78°19'42.89" E		
Chord Direction:	N 3°39'15.26" E		
Radial Direction:	N 89°38'52.42" E		
Tangent Direction:	N 0°21'07.58" W		

Project Name: EC-1060*Crossroads
Description: survey alg for Crossroads Interchange
Horizontal Alignment Name: A005 *CONTINUED
Description: RAMP NW of I-240
Style: Default

	STATION	NORTHING	EASTING
Element: Linear			
S.T. STA. (6692)	431+64.67	143941.1131	2150739.2063
PC. STA. (6691)	432+11.57	143988.0122	2150738.9245
Tangent Direction:	N 0°20'39.33" W		
Tangent Length:	46.90		
Element: Circular			
PC. STA. (6691)	432+11.57	143988.0122	2150738.9245
P.I. STA. ( )	432+79.92	144056.3571	2150738.5139
C.C. STA. (6398)		143997.7548	2152360.4853
P.T. STA. (6690)	433+48.18	144124.4942	2150743.8557
Radius:	1621.59		
Delta:	4°49'36.85" Right		
Degree of Curvature(Arc):	3°31'59.91"		
Length:	136.61		
Tangent:	68.35		
Chord:	136.57		
Middle Ordinate:	1.44		
External:	1.44		
Tangent Direction:	N 0°20'39.25" W		
Radial Direction:	N 89°39'20.75" E		
Chord Direction:	N 2°04'09.17" E		
Radial Direction:	S 85°31'02.41" E		
Tangent Direction:	N 4°28'57.59" E		
Element: Linear			
P.T. STA. (6690)	433+48.18	144124.4942	2150743.8557
P.I. STA. (6689)	436+36.11	144411.5434	2150766.3597
Tangent Direction:	N 4°28'57.67" E		
Tangent Length:	287.93		
Element: Linear			
P.I. STA. (6689)	436+36.11	144411.5434	2150766.3597
P.I. STA. (6511)	437+86.11	144561.4456	2150771.7757
Tangent Direction:	N 2°04'09.17" E		
Tangent Length:	150.00		
Element: Linear			
P.I. STA. (6511)	437+86.11	144561.4456	2150771.7757
P.I. STA. (6512)	437+90.78	144566.1155	2150771.7476
Tangent Direction:	N 0°20'39.33" W		
Tangent Length:	4.67		
Element: Linear			
P.I. STA. (6512)	437+90.78	144566.1155	2150771.7476
PC. STA. (6513)	440+93.42	144868.2658	2150754.5384
Tangent Direction:	N 3°15'35.33" W		
Tangent Length:	302.64		
Element: Circular			
PC. STA. (6513)	440+93.42	144868.2658	2150754.5384
P.I. STA. ( )	441+51.63	144926.3742	2150751.2287
C.C. STA. (6330)		144705.3631	2147894.3847
P.T. STA. (6514)	442+09.81	144984.3001	2150745.5617
Radius:	2864.79		
Delta:	2°19'40.01" Left		
Degree of Curvature(Arc):	2°00'00.00"		
Length:	116.39		
Tangent:	58.20		
Chord:	116.38		
Middle Ordinate:	0.59		
External:	0.59		
Tangent Direction:	N 3°15'35.33" W		
Radial Direction:	N 86°44'24.67" E		
Chord Direction:	N 4°25'25.33" W		
Radial Direction:	N 84°24'44.67" E		
Tangent Direction:	N 5°35'15.33" W		
Element: Linear			
P.T. STA. (6514)	442+09.81	144984.3001	2150745.5617
PC. STA. (6515)	445+63.55	145336.3593	2150711.1190
Tangent Direction:	N 5°35'15.33" W		
Tangent Length:	353.74		
Element: Circular			
PC. STA. (6515)	445+63.55	145336.3593	2150711.1190
P.I. STA. ( )	445+69.04	145341.8198	2150710.5847
C.C. STA. (6331)		145333.9250	2150686.2378
P.T. STA. (6516)	445+74.35	145346.5547	2150707.8130
Radius:	25.00		
Delta:	24°45'21.47" Left		
Degree of Curvature(Arc):	229°10'59.22"		
Length:	10.80		
Tangent:	5.49		
Chord:	10.72		
Middle Ordinate:	0.58		
External:	0.59		
Tangent Direction:	N 5°35'16.64" W		
Radial Direction:	N 84°24'43.36" E		
Chord Direction:	N 17°57'57.38" W		
Radial Direction:	N 59°39'21.88" E		
Tangent Direction:	N 30°20'38.12" W		
Element: Linear			
P.T. STA. (6516)	445+74.35	145346.5547	2150707.8130
P.O.E. STA. (6517)	445+88.86	145359.0769	2150700.4826
Tangent Direction:	N 30°20'39.33" W		
Tangent Length:	14.51		

POE & ASSOCIATES, OKLAHOMA CITY, OK

Project Name: EC-1060*Crossroads
Description: survey alg for Crossroads Interchange
Horizontal Alignment Name: A006
Description: RAMP NE of I-240
Style: Default

	STATION	NORTHING	EASTING
Element: Clothoid			
T.S. STA. (6711)	79+34.35	142961.8980	2151777.2995
S.P.I. STA. (6312)	80+34.78	142961.1659	2151676.8741
S.C. STA. (6710)	80+84.64	142971.2870	2151627.5936
Entrance Radius:	0.00		
Exit Radius:	358.10		
Length:	150.29		
Angle:	12°01'24.49" Right		
Constant:	231.99		
Long Tangent:	100.43		
Short Tangent:	50.31		
Long Chord:	150.00		
Xs:	149.63		
Ys:	10.48		
P:	2.62		
K:	75.04		
Tangent Direction:	S 89°34'56.41" W		
Radial Direction:	N 0°25'03.59" W		
Chord Direction:	N 86°24'40.81" W		
Radial Direction:	N 11°36'20.90" E		
Tangent Direction:	N 78°23'39.10" W		
Element: Circular			
S.C. STA. (6710)	80+84.64	142971.2870	2151627.5936
P.I. STA. ( )	81+50.98	142984.6150	2151562.6074
C.C. STA. (6304)		143322.0853	2151699.5388
C.S. STA. (6709)	82+15.83	143020.3373	2151506.7079
Radius:	358.10		
Delta:	20°59'25.39" Right		
Degree of Curvature(Arc):	15°59'59.78"		
Length:	131.19		
Tangent:	66.34		
Chord:	130.46		
Middle Ordinate:	5.99		
External:	6.09		
Tangent Direction:	N 78°24'35.76" W		
Radial Direction:	N 11°35'24.24" E		
Chord Direction:	N 67°54'53.07" W		
Radial Direction:	N 32°34'49.62" E		
Tangent Direction:	N 57°25'10.38" W		
Element: Clothoid			
C.S. STA. (6709)	82+15.83	143020.3373	2151506.7079
S.P.I. STA. (6313)	82+66.14	143047.4163	2151464.3082
S.T. STA. (6708)	83+66.13	143117.9174	2151392.7863
Entrance Radius:	358.10		
Exit Radius:	0.00		
Length:	150.29		
Angle:	12°01'24.49" Right		
Constant:	231.99		
Long Tangent:	100.43		
Short Tangent:	50.31		
Long Chord:	150.00		
Xs:	149.63		
Ys:	10.48		
P:	2.62		
K:	75.04		
Tangent Direction:	N 57°26'07.04" W		
Radial Direction:	N 32°33'52.96" E		
Chord Direction:	N 49°25'05.33" W		
Radial Direction:	N 44°35'17.45" E		
Tangent Direction:	N 45°24'42.55" W		
Element: Linear			
S.T. STA. (6708)	83+66.13	143117.9174	2151392.7863
T.S. STA. (6707)	88+30.10	143443.5820	2151062.3159
Tangent Direction:	N 45°25'10.74" W		
Tangent Length:	463.97		

PLS			POE & ASSOCIATES, OKLAHOMA CITY, OK SURVEY DIVISION
DRAWN			**SURVEY DATA SHEET**
CHECKED			
APPROVED			
CREW	POE		SWO 292311 PROJECT NO. 030321(1) SHEET NO. SDS

OKLAHOMA COUNTY

Project Name: EC-1060*Crossroads
Description: survey alg for Crossroads Interchange
Horizontal Alignment Name: A006 *CONTINUED
Description: RAMP NE of I-240
Style: Default

		STATION	NORTHING	EASTING
Element: Clothoid				
T.S. STA.	(6707)	88+30.10	143443.5820	2151062.3159
S.P.I. STA.	(6314)	89+30.53	143514.0636	2150990.7747
S.C. STA.	(6706)	89+80.39	143556.0621	2150963.0776
Entrance Radius:		0.00		
Exit Radius:		358.10		
Length:		150.29		
Angle:		12°01'24.49" Right		
Constant:		231.99		
Long Tangent:		100.43		
Short Tangent:		50.31		
Long Chord:		150.00		
Xs:		149.63		
Ys:		10.48		
P:		2.62		
K:		75.04		
Tangent Direction:		N 45°25'38.93" W		
Radial Direction:		N 44°34'21.07" E		
Chord Direction:		N 41°25'16.15" W		
Radial Direction:		N 56°35'45.56" E		
Tangent Direction:		N 33°24'14.44" W		
Element: Circular				
S.C. STA.	(6706)	89+80.39	143556.0621	2150963.0776
P.I. STA.	( )	90+47.01	143611.6654	2150926.3862
C.C. STA.	(6305)		143753.2930	2151261.9681
C.S. STA.	(6705)	91+12.12	143676.7437	2150912.1456
Radius:		358.10		
Delta:		21°04'36.47" Right		
Degree of Curvature(Arc):		15°59'59.78"		
Length:		131.73		
Tangent:		66.62		
Chord:		130.99		
Middle Ordinate:		6.04		
External:		6.14		
Tangent Direction:		N 33°25'11.64" W		
Radial Direction:		N 56°34'48.36" E		
Chord Direction:		N 22°52'53.41" W		
Radial Direction:		N 77°39'24.82" E		
Tangent Direction:		N 12°20'35.18" W		
Element: Clothoid				
C.S. STA.	(6705)	91+12.12	143676.7437	2150912.1456
S.P.I. STA.	(6315)	91+62.43	143725.8868	2150901.3776
S.T. STA.	(6704)	92+62.42	143826.3132	2150900.7895
Entrance Radius:		358.10		
Exit Radius:		0.00		
Length:		150.29		
Angle:		12°01'24.49" Right		
Constant:		231.99		
Long Tangent:		100.43		
Short Tangent:		50.31		
Long Chord:		150.00		
Xs:		149.63		
Ys:		10.48		
P:		2.62		
K:		75.04		
Tangent Direction:		N 12°21'32.38" W		
Radial Direction:		N 77°38'27.62" E		
Chord Direction:		N 4°20'30.67" W		
Radial Direction:		N 89°39'52.11" E		
Tangent Direction:		N 0°20'07.89" W		
Element: Linear				
S.T. STA.	(6704)	92+62.42	143826.3132	2150900.7895
PC. STA.	(6703)	92+68.87	143832.7631	2150900.7508
Tangent Direction:		N 0°20'36.08" W		
Tangent Length:		6.45		
Element: Circular				
PC. STA.	(6703)	92+68.87	143832.7631	2150900.7508
P.I. STA.	( )	93+36.35	143899.7346	2150892.4278
C.C. STA.	(6306)		143974.0876	2152037.9228
P.T. STA.	(6702)	94+03.68	143967.2201	2150892.0234
Radius:		1145.92		
Delta:		6°44'27.10" Right		
Degree of Curvature(Arc):		4°59'59.93"		
Length:		134.82		
Tangent:		67.49		
Chord:		134.74		
Middle Ordinate:		1.98		
External:		1.99		
Tangent Direction:		N 7°05'03.26" W		
Radial Direction:		N 82°54'56.74" E		
Chord Direction:		N 3°42'49.71" W		
Radial Direction:		N 89°39'23.84" E		
Tangent Direction:		N 0°20'36.16" W		

Project Name: EC-1060*Crossroads
Description: survey alg for Crossroads Interchange
Horizontal Alignment Name: A006 *CONTINUED
Description: RAMP NE of I-240
Style: Default

		STATION	NORTHING	EASTING
Element: Linear				
P.T. STA.	(6702)	94+03.68	143967.2201	2150892.0234
PC. STA.	(6701)	94+58.50	144021.6216	2150885.2625
Tangent Direction:		N 7°05'03.33" W		
Tangent Length:		54.82		
Element: Circular				
PC. STA.	(6701)	94+58.50	144021.6216	2150885.2625
P.I. STA.	( )	95+57.74	144120.0961	2150873.0243
C.C. STA.	(6307)		144229.4516	2152557.5676
P.T. STA.	(6697)	96+56.74	144219.3265	2150872.4281
Radius:		1685.17		
Delta:		6°44'24.00" Right		
Degree of Curvature(Arc):		3°24'00.00"		
Length:		198.24		
Tangent:		99.23		
Chord:		198.12		
Middle Ordinate:		2.91		
External:		2.92		
Tangent Direction:		N 7°05'03.33" W		
Radial Direction:		N 82°54'56.67" E		
Chord Direction:		N 3°42'51.33" W		
Radial Direction:		N 89°39'20.67" E		
Tangent Direction:		N 0°20'39.33" W		
Element: Linear				
P.T. STA.	(6697)	96+56.74	144219.3265	2150872.4281
PC. STA.	(6696)	96+80.21	144242.7960	2150872.2870
Tangent Direction:		N 0°20'39.33" W		
Tangent Length:		23.47		
Element: Circular				
PC. STA.	(6696)	96+80.21	144242.7960	2150872.2870
P.I. STA.	( )	97+47.51	144309.8469	2150866.5174
C.C. STA.	(6308)		144387.2696	2152551.2526
P.T. STA.	(6712)	98+14.74	144377.1442	2150866.1130
Radius:		1685.17		
Delta:		4°34'25.95" Right		
Degree of Curvature(Arc):		3°24'00.00"		
Length:		134.53		
Tangent:		67.30		
Chord:		134.49		
Middle Ordinate:		1.34		
External:		1.34		
Tangent Direction:		N 4°55'05.30" W		
Radial Direction:		N 85°04'54.70" E		
Chord Direction:		N 2°37'52.33" W		
Radial Direction:		N 89°39'20.64" E		
Tangent Direction:		N 0°20'39.36" W		
Element: Linear				
P.T. STA.	(6712)	98+14.74	144377.1442	2150866.1130
PC. STA.	(6713)	98+30.62	144392.9658	2150864.7516
Tangent Direction:		N 4°55'05.33" W		
Tangent Length:		15.88		
Element: Circular				
PC. STA.	(6713)	98+30.62	144392.9658	2150864.7516
P.I. STA.	( )	98+97.91	144460.0166	2150858.9819
C.C. STA.	(6309)		144537.4394	2152543.7171
P.T. STA.	(6714)	99+65.14	144527.3140	2150858.5775
Radius:		1685.17		
Delta:		4°34'25.95" Right		
Degree of Curvature(Arc):		3°24'00.00"		
Length:		134.53		
Tangent:		67.30		
Chord:		134.49		
Middle Ordinate:		1.34		
External:		1.34		
Tangent Direction:		N 4°55'05.30" W		
Radial Direction:		N 85°04'54.70" E		
Chord Direction:		N 2°37'52.33" W		
Radial Direction:		N 89°39'20.64" E		
Tangent Direction:		N 0°20'39.36" W		
Element: Linear				
P.T. STA.	(6714)	99+65.14	144527.3140	2150858.5775
PC. STA.	(6715)	99+74.05	144536.2236	2150858.4981
Tangent Direction:		N 0°30'39.33" W		
Tangent Length:		8.91		

POE & ASSOCIATES, OKLAHOMA CITY, OK

Project Name: EC-1060*Crossroads
Description: survey alg for Crossroads Interchange
Horizontal Alignment Name: A006 *CONTINUED
Description: RAMP NE of I-240
Style: Default

		STATION	NORTHING	EASTING
Element: Circular				
PC. STA.	(6715)	99+74.05	144536.2236	2150858.4981
P.I. STA.	( )	100+57.84	144620.0121	2150857.9946
C.C. STA.	(6310)		144547.6990	2152768.3236
P.T. STA.	(6716)	101+41.52	144703.5228	2150864.8310
Radius:		1909.86		
Delta:		5°01'27.04" Right		
Degree of Curvature(Arc):		3°00'00.00"		
Length:		167.47		
Tangent:		83.79		
Chord:		167.42		
Middle Ordinate:		1.84		
External:		1.84		
Tangent Direction:		N 0°20'39.35" W		
Radial Direction:		N 89°39'20.65" E		
Chord Direction:		N 2°10'04.17" E		
Radial Direction:		S 85°19'12.31" E		
Tangent Direction:		N 4°40'47.69" E		
Element: Linear				
P.T. STA.	(6716)	101+41.52	144703.5228	2150864.8310
PC. STA.	(6717)	106+97.35	145257.4997	2150910.1806
Tangent Direction:		N 4°40'47.67" E		
Tangent Length:		555.83		
Element: Circular				
PC. STA.	(6717)	106+97.35	145257.4997	2150910.1806
P.I. STA.	( )	107+02.89	145263.0183	2150910.6323
C.C. STA.	(6311)		145255.4601	2150935.0973
P.T. STA.	(6718)	107+08.25	145267.8300	2150913.3720
Radius:		25.00		
Delta:		24°58'35.66" Right		
Degree of Curvature(Arc):		229°10'59.22"		
Length:		10.90		
Tangent:		5.54		
Chord:		10.81		
Middle Ordinate:		0.59		
External:		0.61		
Tangent Direction:		N 4°40'46.34" E		
Radial Direction:		S 85°19'13.66" E		
Chord Direction:		N 17°10'04.17" E		
Radial Direction:		S 60°20'38.00" E		
Tangent Direction:		N 29°39'22.00" E		
Element: Linear				
P.T. STA.	(6718)	107+08.25	145267.8300	2150913.3720
P.O.E. STA.	(6719)	107+22.71	145280.3959	2150920.5266
Tangent Direction:		N 29°39'20.67" E		
Tangent Length:		14.46		

Project Name: EC-1060*Crossroads
Description: survey alg for Crossroads Interchange
Horizontal Alignment Name: A007
Description: RAMP SW of I-240
Style: Default

		STATION	NORTHING	EASTING
Element: Linear				
P.O.B. STA.	(6503)	55+77.56	140595.8439	2150729.2354
PC. STA.	(6502)	55+90.86	140606.5685	2150737.1013
Tangent Direction:		N 36°15'28.63" E		
Tangent Length:		13.30		
Element: Circular				
PC. STA.	(6502)	55+90.86	140606.5685	2150737.1013
P.I. STA.	( )	55+97.56	140611.9701	2150741.0631
C.C. STA.	(6491)		140621.3541	2150716.9423
P.T. STA.	(6501)	56+03.95	140618.6290	2150741.7933
Radius:		25.00		
Delta:		30°00'00.41" Left		
Degree of Curvature(Arc):		229°10'59.22"		
Length:		13.09		
Tangent:		6.70		
Chord:		12.94		
Middle Ordinate:		0.85		
External:		0.88		
Tangent Direction:		N 36°15'28.63" E		
Radial Direction:		S 53°44'31.17" E		
Chord Direction:		N 21°15'28.63" E		
Radial Direction:		S 83°44'31.57" E		
Tangent Direction:		N 6°15'28.43" E		
Element: Linear				
P.T. STA.	(6501)	56+03.95	140618.6290	2150741.7933
PC. STA.	(6500)	57+74.98	140788.6398	2150760.4364
Tangent Direction:		N 6°15'28.63" E		
Tangent Length:		171.03		

PLS			POE & ASSOCIATES, OKLAHOMA CITY, OK SURVEY DIVISION
DRAWN			**SURVEY DATA SHEET**
CHECKED			
APPROVED			
CREW	POE		SWD 2923(1) PROJECT NO. 0903217) SHEET NO. SDS

OKLAHOMA COUNTY

Project Name: EC-1060*Crossroads
Description: survey alg for Crossroads Interchange
Horizontal Alignment Name: A007 *CONTINUED
Description: RAMP SW of I-240
Style: Default

	STATION	NORTHING	EASTING
Element: Circular			
PC. STA. (6500)	57+74.98	140788.6398	2150760.4364
P.I. STA. ( )	58+07.69	140821.1520	2150764.0016
C.C. STA. (6486)		140944.7777	2149336.5777
P.T. STA. (6499)	58+40.38	140853.7929	2150766.0791
Radius:	1432.39		
Delta:	2°36'57.99" Left		
Degree of Curvature(Arc):	4°00'00.00"		
Length:	65.40		
Tangent:	32.71		
Chord:	65.40		
Middle Ordinate:	0.37		
External:	0.37		
Tangent Direction:	N 6°15'28.62" E		
Radial Direction:	S 83°44'31.38" E		
Chord Direction:	N 4°56'59.63" E		
Radial Direction:	S 86°21'29.36" E		
Tangent Direction:	N 3°38'30.64" E		
Element: Linear			
P.T. STA. (6499)	58+40.38	140853.7929	2150766.0791
PC. STA. (6684)	62+39.89	141252.4962	2150791.4558
Tangent Direction:	N 3°38'30.63" E		
Tangent Length:	399.51		
Element: Circular			
PC. STA. (6684)	62+39.89	141252.4962	2150791.4558
P.I. STA. ( )	63+08.98	141321.4423	2150795.8440
C.C. STA. (6386)		141373.8091	2148885.4535
P.T. STA. (6679)	63+78.00	141390.5253	2150795.2394
Radius:	1909.86		
Delta:	4°08'36.00" Left		
Degree of Curvature(Arc):	3°00'00.00"		
Length:	138.11		
Tangent:	69.09		
Chord:	138.08		
Middle Ordinate:	1.25		
External:	1.25		
Tangent Direction:	N 3°38'30.63" E		
Radial Direction:	S 86°21'29.37" E		
Chord Direction:	N 1°34'12.63" E		
Radial Direction:	N 89°29'54.63" E		
Tangent Direction:	N 0°30'05.37" W		
Element: Linear			
P.T. STA. (6679)	63+78.00	141390.5253	2150795.2394
P.I. STA. (6678)	63+87.39	141399.9150	2150795.1572
Tangent Direction:	N 0°30'05.37" W		
Tangent Length:	9.39		
Element: Linear			
P.I. STA. (6678)	63+87.39	141399.9150	2150795.1572
P.I. STA. (6677)	65+30.33	141542.7016	2150788.5582
Tangent Direction:	N 2°38'45.87" W		
Tangent Length:	142.94		
Element: Linear			
P.I. STA. (6677)	65+30.33	141542.7016	2150788.5582
PC. STA. (6680)	65+47.74	141560.0507	2150787.1042
Tangent Direction:	N 4°47'26.37" W		
Tangent Length:	17.41		
Element: Circular			
PC. STA. (6680)	65+47.74	141560.0507	2150787.1042
P.I. STA. ( )	66+19.26	141631.3205	2150781.1312
C.C. STA. (6387)		141719.5534	2152690.2911
P.T. STA. (6681)	66+90.72	141702.8373	2150780.5052
Radius:	1909.86		
Delta:	4°17'21.02" Right		
Degree of Curvature(Arc):	3°00'00.00"		
Length:	142.97		
Tangent:	71.52		
Chord:	142.94		
Middle Ordinate:	1.34		
External:	1.34		
Tangent Direction:	N 4°47'26.38" W		
Radial Direction:	N 85°12'33.62" E		
Chord Direction:	N 2°38'45.87" W		
Radial Direction:	N 89°29'54.64" E		
Tangent Direction:	N 0°30'05.36" W		
Element: Linear			
P.T. STA. (6681)	66+90.72	141702.8373	2150780.5052
P.I. STA. (6676)	67+09.84	141721.9566	2150780.3379
Tangent Direction:	N 0°30'05.37" W		
Tangent Length:	19.12		
Element: Linear			
P.I. STA. (6676)	67+09.84	141721.9566	2150780.3379
P.I. STA. (6675)	69+07.66	141919.4218	2150768.3633
Tangent Direction:	N 3°28'12.87" W		
Tangent Length:	197.83		
Element: Linear			
P.I. STA. (6675)	69+07.66	141919.4218	2150768.3633
PC. STA. (6682)	69+93.94	142005.1576	2150758.6874
Tangent Direction:	N 6°26'20.37" W		
Tangent Length:	86.28		

SDS 18 OF 46

Project Name: EC-1060*Crossroads
Description: survey alg for Crossroads Interchange
Horizontal Alignment Name: A007 *CONTINUED
Description: RAMP SW of I-240
Style: Default

	STATION	NORTHING	EASTING
Element: Circular			
PC. STA. (6682)	69+93.94	142005.1576	2150758.6874
P.I. STA. ( )	70+59.97	142070.7722	2150751.2824
C.C. STA. (6389)		142147.9451	2152023.8957
P.T. STA. (6683)	71+25.89	142136.8008	2150750.7044
Radius:	1273.24		
Delta:	5°56'14.93" Right		
Degree of Curvature(Arc):	4°29'59.99"		
Length:	131.94		
Tangent:	66.03		
Chord:	131.88		
Middle Ordinate:	1.71		
External:	1.71		
Tangent Direction:	N 6°26'20.33" W		
Radial Direction:	N 83°33'39.67" E		
Chord Direction:	N 3°28'12.87" W		
Radial Direction:	N 89°29'54.59" E		
Tangent Direction:	N 0°30'05.41" W		
Element: Linear			
P.T. STA. (6683)	71+25.89	142136.8008	2150750.7044
T.S. STA. (6674)	71+42.21	142153.1201	2150750.5616
Tangent Direction:	N 0°30'05.37" W		
Tangent Length:	16.32		
Element: Clothoid			
T.S. STA. (6674)	71+42.21	142153.1201	2150750.5616
S.P.I. STA. (6395)	72+42.64	142253.5445	2150749.6963
S.C. STA. (6673)	72+92.50	142302.6577	2150738.7928
Entrance Radius:	0.00		
Exit Radius:	358.10		
Length:	150.29		
Angle:	12°01'24.49" Left		
Constant:	231.99		
Long Tangent:	100.43		
Short Tangent:	50.31		
Long Chord:	150.00		
Xs:	149.63		
Ys:	10.48		
P:	2.62		
K:	75.04		
Tangent Direction:	N 0°29'37.18" W		
Radial Direction:	N 89°30'22.82" E		
Chord Direction:	N 4°29'59.96" W		
Radial Direction:	N 77°28'58.33" E		
Tangent Direction:	N 12°31'01.67" W		
Element: Circular			
S.C. STA. (6673)	72+92.50	142302.6577	2150738.7928
P.I. STA. ( )	73+53.31	142362.0345	2150725.6767
C.C. STA. (6390)		142225.4172	2150389.1222
C.S. STA. (6672)	74+12.97	142413.7535	2150693.6957
Radius:	358.10		
Delta:	19°16'28.87" Left		
Degree of Curvature(Arc):	15°59'59.78"		
Length:	120.47		
Tangent:	60.81		
Chord:	119.90		
Middle Ordinate:	5.05		
External:	5.13		
Tangent Direction:	N 12°27'22.77" W		
Radial Direction:	N 77°32'37.23" E		
Chord Direction:	N 22°05'37.20" W		
Radial Direction:	N 58°16'08.37" E		
Tangent Direction:	N 31°43'51.63" W		
Element: Clothoid			
C.S. STA. (6672)	74+12.97	142413.7535	2150693.6957
S.P.I. STA. (6394)	74+63.28	142456.5707	2150667.2820
S.T. STA. (6671)	75+63.26	142529.1846	2150597.9061
Entrance Radius:	358.10		
Exit Radius:	0.00		
Length:	150.29		
Angle:	12°01'24.49" Left		
Constant:	231.99		
Long Tangent:	100.43		
Short Tangent:	50.31		
Long Chord:	150.00		
Xs:	149.63		
Ys:	10.48		
P:	2.62		
K:	75.04		
Tangent Direction:	N 31°40'12.73" W		
Radial Direction:	N 58°19'47.27" E		
Chord Direction:	N 39°41'14.44" W		
Radial Direction:	N 46°18'22.78" E		
Tangent Direction:	N 43°41'37.22" W		
Element: Linear			
S.T. STA. (6671)	75+63.26	142529.1846	2150597.9061
T.S. STA. (6670)	80+25.58	142863.3533	2150278.4218
Tangent Direction:	N 43°42'47.01" W		
Tangent Length:	462.32		

POE & ASSOCIATES, OKLAHOMA CITY, OK

Project Name: EC-1060*Crossroads
Description: survey alg for Crossroads Interchange
Horizontal Alignment Name: A007 *CONTINUED
Description: RAMP SW of I-240
Style: Default

	STATION	NORTHING	EASTING
Element: Clothoid			
T.S. STA. (6670)	80+25.58	142863.3533	2150278.4218
S.P.I. STA. (6393)	81+26.01	142935.9859	2150209.0654
S.C. STA. (6660)	81+75.88	142964.3351	2150167.5044
Entrance Radius:	0.00		
Exit Radius:	358.10		
Length:	150.29		
Angle:	12°01'24.49" Left		
Constant:	231.99		
Long Tangent:	100.43		
Short Tangent:	50.31		
Long Chord:	150.00		
Xs:	149.63		
Ys:	10.48		
P:	2.62		
K:	75.04		
Tangent Direction:	N 43°40'41.53" W		
Radial Direction:	N 46°19'18.47" E		
Chord Direction:	N 47°41'04.31" W		
Radial Direction:	N 34°17'53.98" E		
Tangent Direction:	N 55°42'06.02" W		
Element: Circular			
S.C. STA. (6660)	81+75.88	142964.3351	2150167.5044
P.I. STA. ( )	82+48.81	143005.5397	2150107.3216
C.C. STA. (6391)		142668.8542	2149965.2011
C.S. STA. (6659)	83+19.78	143019.9226	2150035.8169
Radius:	358.10		
Delta:	23°01'29.16" Left		
Degree of Curvature(Arc):	15°59'59.78"		
Length:	143.91		
Tangent:	72.94		
Chord:	142.94		
Middle Ordinate:	7.20		
External:	7.35		
Tangent Direction:	N 55°36'07.97" W		
Radial Direction:	N 34°23'52.03" E		
Chord Direction:	N 67°06'52.55" W		
Radial Direction:	N 11°22'22.87" E		
Tangent Direction:	N 78°37'37.13" W		
Element: Clothoid			
C.S. STA. (6659)	83+19.78	143019.9226	2150035.8169
S.P.I. STA. (6392)	83+70.09	143029.9289	2149986.5130
S.T. STA. (6658)	84+70.07	143028.9631	2149886.0896
Entrance Radius:	358.10		
Exit Radius:	0.00		
Length:	150.29		
Angle:	12°01'24.49" Left		
Constant:	231.99		
Long Tangent:	100.43		
Short Tangent:	50.31		
Long Chord:	150.00		
Xs:	149.63		
Ys:	10.48		
P:	2.62		
K:	75.04		
Tangent Direction:	N 78°31'39.08" W		
Radial Direction:	N 11°28'20.92" E		
Chord Direction:	N 86°32'40.79" W		
Radial Direction:	N 0°33'03.57" W		
Tangent Direction:	S 89°26'56.43" W		

Project Name: EC-1060*Crossroads
Description: survey alg for Crossroads Interchange
Horizontal Alignment Name: A008
Description: RAMP SE of I-240
Style: Default

	STATION	NORTHING	EASTING
Element: Linear			
P.O.B. STA. (6606)	57+01.31	140720.9889	2150888.1031
PC. STA. (6607)	62+70.63	141288.2754	2150936.1789
Tangent Direction:	N 4°50'38.63" E		
Tangent Length:	569.32		
Element: Circular			
PC. STA. (6607)	62+70.63	141288.2754	2150936.1789
P.I. STA. ( )	64+04.37	141421.5348	2150947.4722
C.C. STA. (6363)		141530.1914	2148081.6214
P.T. STA. (6608)	65+37.91	141555.2667	2150946.3016
Radius:	2864.79		
Delta:	5°20'44.15" Left		
Degree of Curvature(Arc):	2°00'00.00"		
Length:	267.28		
Tangent:	133.74		
Chord:	267.18		
Middle Ordinate:	3.12		
External:	3.12		
Tangent Direction:	N 4°50'38.71" E		
Radial Direction:	S 85°09'21.29" E		
Chord Direction:	N 2°10'16.63" E		
Radial Direction:	N 89°29'54.55" E		
Tangent Direction:	N 0°30'05.45" W		

PLS			POE & ASSOCIATES, OKLAHOMA CITY, OK SURVEY DIVISION
DRAWN			**SURVEY DATA SHEET**
CHECKED			
APPROVED			
CREW	POE		SWO 2923(11) PROJECT NO. 03032(17) SHEET NO. SDS

OKLAHOMA COUNTY

Project Name: EC-1060*Crossroads
Description: survey alg for Crossroads Interchange
Horizontal Alignment Name: A008 *CONTINUED
Description: RAMP SE of I-240
Style: Default

	STATION	NORTHING	EASTING

Element: Linear
P.T. STA. (6608) 65+37.91 141555.2667 2150946.3016
P.I. STA. (6604) 65+50.91 141555.3805 2150959.3011
Tangent Direction: N 89°29'54.63" E
Tangent Length: 13.00

Element: Linear
P.I. STA. (6604) 65+50.91 141555.3805 2150959.3011
P.I. STA. (6605) 71+52.02 142156.4624 2150954.0399
Tangent Direction: N 0°30'05.37" W
Tangent Length: 601.11

Element: Linear
P.I. STA. (6605) 71+52.02 142156.4624 2150954.0399
PC. STA. (6723) 72+27.02 142231.4596 2150953.3835
Tangent Direction: N 0°30'05.37" W
Tangent Length: 75.00

Element: Circular
PC. STA. (6723) 72+27.02 142231.4596 2150953.3835
P.I. STA. ( ) 73+75.59 142380.0152 2150955.7160
C.C. STA. (6724) 142226.1006 2151294.6984
P.T. STA. (6722) 75+07.28 142479.5438 2151066.0258
Radius: 341.36
Delta: 47°02'30.05" Right
Degree of Curvature(Arc): 16°47'04.95"
Length: 280.27
Tangent: 148.57
Chord: 272.46
Middle Ordinate: 28.36
External: 30.93
Tangent Direction: N 0°53'58.30" E
Radial Direction: S 89°06'01.70" E
Chord Direction: N 24°25'13.33" E
Radial Direction: S 42°03'31.64" E
Tangent Direction: N 47°56'28.36" E

Element: Linear
P.T. STA. (6722) 75+07.28 142479.5438 2151066.0258
P.I. STA. (6597) 75+82.28 142531.1322 2151120.4651
Tangent Direction: N 46°32'24.60" E
Tangent Length: 75.00

Element: Linear
P.I. STA. (6597) 75+82.28 142531.1322 2151120.4651
PC. STA. (6596) 77+42.50 142641.3389 2151236.7619
Tangent Direction: N 46°32'24.60" E
Tangent Length: 160.22

Element: Circular
PC. STA. (6596) 77+42.50 142641.3389 2151236.7619
P.I. STA. ( ) 80+43.81 142848.5942 2151455.4703
C.C. STA. (6342) 142086.8279 2151762.2348
P.T. STA. (6595) 83+16.50 142850.7483 2151756.7733
Radius: 763.94
Delta: 43°03'00.76" Right
Degree of Curvature(Arc): 7°30'00.13"
Length: 574.00
Tangent: 301.31
Chord: 560.59
Middle Ordinate: 53.28
External: 57.27
Tangent Direction: N 46°32'24.60" E
Radial Direction: S 43°27'35.40" E
Chord Direction: N 68°03'54.98" E
Radial Direction: S 0°24'34.64" E
Tangent Direction: N 89°35'25.36" E

Project Name: EC-1060*Crossroads
Description: survey alg for Crossroads Interchange
Horizontal Alignment Name: A009
Description: N of I-240
Style: Default

	STATION	NORTHING	EASTING

Element: Linear
P.O.B. STA. (6588) 438+14.61 143012.8229 2151817.7714
PC. STA. (6587) 440+14.61 143014.2534 2152017.7663
Tangent Direction: N 89°35'24.60" E
Tangent Length: 200.00

SDS 20 OF 46

Project Name: EC-1060*Crossroads
Description: survey alg for Crossroads Interchange
Horizontal Alignment Name: A009 *CONTINUED
Description: N of I-240
Style: Default

	STATION	NORTHING	EASTING

Element: Circular
PC. STA. (6587) 440+14.61 143014.2534 2152017.7663
P.I. STA. ( ) 441+22.91 143015.0277 2152126.0592
C.C. STA. (6339) 143969.1590 2152010.9390
P.T. STA. (6585) 442+30.28 143040.0327 2152231.4286
Radius: 954.93
Delta: 12°56'24.70" Left
Degree of Curvature(Arc): 5°59'59.99"
Length: 215.67
Tangent: 108.30
Chord: 215.21
Middle Ordinate: 6.08
External: 6.12
Tangent Direction: N 89°35'25.30" E
Radial Direction: S 0°24'34.70" E
Chord Direction: N 83°07'12.95" E
Radial Direction: S 13°20'59.40" E
Tangent Direction: N 76°39'00.60" E

Element: Linear
P.T. STA. (6585) 442+30.28 143040.0327 2152231.4286
PC. STA. (6581) 447+16.73 143152.3521 2152704.7340
Tangent Direction: N 76°39'00.60" E
Tangent Length: 486.45

Element: Circular
PC. STA. (6581) 447+16.73 143152.3521 2152704.7340
P.I. STA. ( ) 450+97.27 143240.2178 2153074.9930
C.C. STA. (6337) 141758.6676 2153035.4672
P.T. STA. (6584) 454+60.63 143132.7351 2153440.0404
Radius: 1432.39
Delta: 29°45'21.94" Right
Degree of Curvature(Arc): 4°00'00.05"
Length: 743.90
Tangent: 380.54
Chord: 735.57
Middle Ordinate: 48.02
External: 49.69
Tangent Direction: N 76°39'00.60" E
Radial Direction: S 13°20'59.40" E
Chord Direction: S 88°28'18.43" E
Radial Direction: S 16°24'22.54" W
Tangent Direction: S 73°35'37.46" E

Element: Linear
P.T. STA. (6584) 454+60.63 143132.7351 2153440.0404
PC. STA. (6582) 457+88.35 143040.1733 2153754.4171
Tangent Direction: S 73°35'38.40" E
Tangent Length: 327.72

Element: Circular
PC. STA. (6582) 457+88.35 143040.1733 2153754.4171
P.I. STA. ( ) 459+09.33 143006.0015 2153870.4757
C.C. STA. (6340) 143825.3560 2153985.6026
P.T. STA. (6590) 460+28.58 143006.8669 2153991.4573
Radius: 818.51
Delta: 16°48'58.04" Left
Degree of Curvature(Arc): 7°00'00.03"
Length: 240.23
Tangent: 120.98
Chord: 239.37
Middle Ordinate: 8.80
External: 8.89
Tangent Direction: S 73°35'37.36" E
Radial Direction: S 16°24'22.64" W
Chord Direction: S 82°00'06.38" E
Radial Direction: S 0°24'35.40" E
Tangent Direction: N 89°35'24.60" E

Element: Linear
P.T. STA. (6590) 460+28.58 143006.8669 2153991.4573
P.I. STA. (6720) 460+42.45 143006.9661 2154005.3222
Tangent Direction: N 89°35'24.81" E
Tangent Length: 13.87

Element: Linear
P.I. STA. (6720) 460+42.45 143006.9661 2154005.3222
PC. STA. (6614) 473+38.12 143042.1412 2155300.5169
Tangent Direction: N 88°26'39.60" E
Tangent Length: 1295.67

POE & ASSOCIATES, OKLAHOMA CITY, OK

Project Name: EC-1060*Crossroads
Description: survey alg for Crossroads Interchange
Horizontal Alignment Name: A009 *CONTINUED
Description: N of I-240
Style: Default

	STATION	NORTHING	EASTING

Element: Circular
PC. STA. (6614) 473+38.12 143042.1412 2155300.5169
P.I. STA. ( ) 475+84.63 143050.2906 2155546.8960
C.C. STA. (6348) 143996.5493 2155268.9482
P.R.C. STA. (6613) 478+20.61 143176.6792 2155758.5443
Radius: 954.93
Delta: 28°56'58.63" Left
Degree of Curvature(Arc): 5°59'59.99"
Length: 482.49
Tangent: 246.51
Chord: 477.38
Middle Ordinate: 30.31
External: 31.31
Tangent Direction: N 88°06'19.91" E
Radial Direction: S 1°53'40.09" E
Chord Direction: N 73°37'50.60" E
Radial Direction: S 30°50'38.71" E
Tangent Direction: N 59°09'21.29" E

Element: Circular
P.R.C. STA. (6613) 478+20.61 143176.6792 2155758.5443
P.I. STA. ( ) 480+67.13 143303.0677 2155970.1926
C.C. STA. (6349) 142356.8091 2156248.1404
P.C.C. STA. (6612) 483+03.11 143311.2171 2156216.5716
Radius: 954.93
Delta: 28°56'58.62" Right
Degree of Curvature(Arc): 5°59'59.99"
Length: 482.49
Tangent: 246.51
Chord: 477.38
Middle Ordinate: 30.31
External: 31.31
Tangent Direction: N 59°09'21.29" E
Radial Direction: S 30°50'38.71" E
Chord Direction: N 73°37'50.60" E
Radial Direction: S 1°53'40.09" E
Tangent Direction: N 88°06'19.91" E

Element: Circular
P.C.C. STA. (6612) 483+03.11 143311.2171 2156216.5716
P.I. STA. ( ) 485+42.11 143308.0905 2156455.5543
C.C. STA. (6350) 142356.3688 2156204.0793
P.R.C. STA. (6615) 487+71.49 143192.7576 2156664.8885
Radius: 954.93
Delta: 28°06'10.97" Right
Degree of Curvature(Arc): 5°59'59.99"
Length: 468.38
Tangent: 239.00
Chord: 463.70
Middle Ordinate: 28.57
External: 29.45
Tangent Direction: S 89°15'01.57" E
Radial Direction: S 0°44'58.43" W
Chord Direction: S 75°11'56.08" E
Radial Direction: S 28°51'09.40" W
Tangent Direction: S 61°08'50.60" E

Element: Circular
P.R.C. STA. (6615) 487+71.49 143192.7576 2156664.8885
P.I. STA. ( ) 490+10.49 143075.1276 2156872.9406
C.C. STA. (6351) 144024.0236 2157134.8758
P.T. STA. (6616) 492+39.87 143069.3707 2157111.8743
Radius: 954.93
Delta: 28°06'10.97" Left
Degree of Curvature(Arc): 5°59'59.99"
Length: 468.38
Tangent: 239.00
Chord: 463.70
Middle Ordinate: 28.57
External: 29.45
Tangent Direction: S 60°31'00.23" E
Radial Direction: S 29°28'59.77" W
Chord Direction: S 74°34'05.72" E
Radial Direction: S 1°22'48.80" W
Tangent Direction: S 88°37'11.20" E

PLS			POE & ASSOCIATES, OKLAHOMA CITY, OK SURVEY DIVISION
DRAWN			SURVEY DATA SHEET
CHECKED			
APPROVED			
CREW	POE		SWO 292311 PROJECT NO. 0903211(7) SHEET NO. SD20

OKLAHOMA COUNTY

Project Name: EC-1060*Crossroads
Description: survey alg for Crossroads Interchange
Horizontal Alignment Name: A010
Description: S of I-240
Style: Default

	STATION	NORTHING	EASTING
Element: Linear			
P.O.B. STA. (6621)	467+13.00	142882.3266	2154716.8604
PC. STA. (6620)	472+12.38	142844.6891	2155214.8201
Tangent Direction:	S 85°40'39.40" E		
Tangent Length:	499.38		
Element: Circular			
PC. STA. (6620)	472+12.38	142844.6891	2155214.8201
P.I. STA. ( )	474+82.01	142824.3679	2155483.6784
C.C. STA. (6352)		141575.0705	2155118.8580
P.T. STA. (6619)	477+43.78	142696.8096	2155721.2213
Radius:	1273.24		
Delta:	23°54'46.77" Right		
Degree of Curvature(Arc):	4°29'59.99"		
Length:	531.40		
Tangent:	269.63		
Chord:	527.55		
Middle Ordinate:	27.62		
External:	28.24		
Tangent Direction:	S 85°40'39.40" E		
Radial Direction:	S 4°19'20.60" W		
Chord Direction:	S 73°43'16.02" E		
Radial Direction:	S 28°14'07.37" W		
Tangent Direction:	S 61°45'52.63" E		
Element: Linear			
P.T. STA. (6619)	477+43.78	142696.8096	2155721.2213
PC. STA. (6618)	479+85.16	142582.6137	2155933.8798
Tangent Direction:	S 61°45'52.40" E		
Tangent Length:	241.38		
Element: Circular			
PC. STA. (6618)	479+85.16	142582.6137	2155933.8798
P.I. STA. ( )	481+37.37	142510.6015	2156067.9828
C.C. STA. (6353)		143111.2203	2156217.7372
P.C.C. STA. (6617)	482+83.30	142511.2254	2156220.1964
Radius:	600.00		
Delta:	28°28'12.98" Left		
Degree of Curvature(Arc):	9°32'57.47"		
Length:	298.14		
Tangent:	152.21		
Chord:	295.08		
Middle Ordinate:	18.42		
External:	19.01		
Tangent Direction:	S 61°45'52.42" E		
Radial Direction:	S 28°14'07.58" W		
Chord Direction:	S 75°59'58.91" E		
Radial Direction:	S 0°14'05.40" E		
Tangent Direction:	N 89°45'54.60" E		
Element: Circular			
P.C.C. STA. (6617)	482+83.30	142511.2254	2156220.1964
P.I. STA. ( )	484+57.61	142511.9399	2156394.5045
C.C. STA. (6354)		143111.2203	2156217.7369
P.T. STA. (6622)	486+22.58	142605.9392	2156541.2968
Radius:	600.00		
Delta:	32°23'55.87" Left		
Degree of Curvature(Arc):	9°32'57.47"		
Length:	339.28		
Tangent:	174.31		
Chord:	334.78		
Middle Ordinate:	23.82		
External:	24.81		
Tangent Direction:	N 89°45'54.47" E		
Radial Direction:	S 0°14'05.53" E		
Chord Direction:	N 73°33'56.54" E		
Radial Direction:	S 32°38'01.40" E		
Tangent Direction:	N 57°21'58.60" E		
Element: Linear			
P.T. STA. (6622)	486+22.58	142605.9392	2156541.2968
PC. STA. (6623)	488+32.66	142719.2283	2156718.2125
Tangent Direction:	N 57°21'58.60" E		
Tangent Length:	210.08		
Element: Circular			
PC. STA. (6623)	488+32.66	142719.2283	2156718.2125
P.I. STA. ( )	490+18.84	142819.6299	2156875.0027
C.C. STA. (6355)		142116.0911	2157104.4352
P.C.C. STA. (6624)	491+96.96	142830.9630	2157060.8391
Radius:	716.20		
Delta:	29°08'38.00" Right		
Degree of Curvature(Arc):	7°59'59.89"		
Length:	364.30		
Tangent:	186.18		
Chord:	360.39		
Middle Ordinate:	23.04		
External:	23.80		
Tangent Direction:	N 57°21'58.60" E		
Radial Direction:	S 32°38'01.40" E		
Chord Direction:	N 71°56'17.60" E		
Radial Direction:	S 3°29'23.40" E		
Tangent Direction:	N 86°30'36.60" E		

Project Name: EC-1060*Crossroads
Description: survey alg for Crossroads Interchange
Horizontal Alignment Name: A010 *CONTINUED
Description: S of I-240
Style: Default

	STATION	NORTHING	EASTING
Element: Circular			
P.C.C. STA. (6624)	491+96.96	142830.9630	2157060.8391
P.I. STA. ( )	492+74.51	142835.6839	2157138.2442
C.C. STA. (6356)		139971.4863	2157235.2368
P.T. STA. (6625)	493+52.02	142836.2103	2157215.7914
Radius:	2864.79		
Delta:	3°06'04.32" Right		
Degree of Curvature(Arc):	2°00'00.00"		
Length:	155.06		
Tangent:	77.55		
Chord:	155.04		
Middle Ordinate:	1.05		
External:	1.05		
Tangent Direction:	N 86°30'35.60" E		
Radial Direction:	S 3°29'24.40" E		
Chord Direction:	N 88°03'37.76" E		
Radial Direction:	S 0°23'20.08" E		
Tangent Direction:	N 89°36'39.92" E		
Element: Linear			
P.T. STA. (6625)	493+52.02	142836.2103	2157215.7914
P.O.E. STA. (6626)	502+52.15	142842.3215	2158115.9006
Tangent Direction:	N 89°36'39.60" E		
Tangent Length:	900.13		

Project Name: EC-1060*Crossroads
Description: survey alg for Crossroads Interchange
Horizontal Alignment Name: A011
Description: SANTA FE. AVE
Style: Default

	STATION	NORTHING	EASTING
Element: Linear			
P.O.B. STA. (6661)	40+07.16	142544.2397	2145645.6763
P.I. STA. (3120)	44+10.44	142947.5057	2145642.3196
Tangent Direction:	N 0°28'36.84" W		
Tangent Length:	403.28		
Element: Linear			
P.I. STA. (3120)	44+10.44	142947.5057	2145642.3196
P.I. STA. (6002)	45+07.16	143044.2256	2145641.4636
Tangent Direction:	N 0°30'25.42" W		
Tangent Length:	96.72		
Element: Linear			
P.I. STA. (6002)	45+07.16	143044.2256	2145641.4636
P.O.E. STA. (6402)	50+07.16	143544.2060	2145637.0388
Tangent Direction:	N 0°30'25.38" W		
Tangent Length:	500.00		

Project Name: EC-1060*Crossroads
Description: survey alg for Crossroads Interchange
Horizontal Alignment Name: A012
Description: SHIELDS BLVD.
Style: Default

	STATION	NORTHING	EASTING
Element: Linear			
P.O.B. STA. (6419)	142+61.38	142585.3894	2147507.7199
P.I. STA. (6001)	147+61.38	143060.4395	2147351.7473
Tangent Direction:	N 18°10'35.38" W		
Tangent Length:	500.00		
Element: Linear			
P.I. STA. (6001)	147+61.38	143060.4395	2147351.7473
P.O.E. STA. (6418)	152+61.38	143535.4895	2147195.7747
Tangent Direction:	N 18°10'35.38" W		
Tangent Length:	500.00		

Project Name: EC-1060*Crossroads
Description: survey alg for Crossroads Interchange
Horizontal Alignment Name: A013
Description: POLE RD.
Style: Default

	STATION	NORTHING	EASTING
Element: Linear			
P.O.B. STA. (6579)	447+80.58	142681.2611	2153020.1679
P.I. STA. (6570)	450+14.60	142915.2749	2153018.4940
Tangent Direction:	N 0°24'35.40" W		
Tangent Length:	234.02		
Element: Linear			
P.I. STA. (6570)	450+14.60	142915.2749	2153018.4940
P.O.E. STA. (6583)	452+90.26	143190.9323	2153016.5222
Tangent Direction:	N 0°24'35.40" W		
Tangent Length:	275.66		

Project Name: EC-1060*Crossroads
Description: survey alg for Crossroads Interchange
Horizontal Alignment Name: A014
Description: EASTERN AVE.
Style: Default

	STATION	NORTHING	EASTING
Element: Linear			
P.O.B. STA. (6423)	20+10.87	142411.2265	2156220.6737
P.I. STA. (6000)	25+10.87	142911.2208	2156218.2873
Tangent Direction:	N 0°16'24.45" W		
Tangent Length:	500.00		
Element: Linear			
P.I. STA. (6000)	25+10.87	142911.2208	2156218.2873
P.I. STA. (3049)	26+34.64	143034.9922	2156217.6966
Tangent Direction:	N 0°16'24.41" W		
Tangent Length:	123.77		
Element: Linear			
P.I. STA. (3049)	26+34.64	143034.9922	2156217.6966
P.O.E. STA. (6424)	30+10.87	143411.2163	2156216.1644
Tangent Direction:	N 0°14'00.04" W		
Tangent Length:	376.23		

Project Name: EC-1060*Crossroads
Description: SURVEY ALG FOR CROSSROADS INTERCHANGE
Horizontal Alignment Name: A015
Description: R.R. BNSF
Style: Default

	STATION	NORTHING	EASTING
Element: Linear			
P.O.B. STA. (6725)	20557+83.38	142228.6858	2153989.8391
PC. STA. (6426)	20562+83.38	142728.6774	2153986.9254
Tangent Direction:	N 0°20'01.97" W		
Tangent Length:	500.00		
Element: Circular			
PC. STA. (6426)	20562+83.38	142728.6774	2153986.9254
P.I. STA. ( )	20576+48.20	144093.4798	2153994.2466
C.C. STA. (6430)		142759.4118	2148257.4299
P.T. STA. (6428)	20589+63.08	145315.0154	2153385.4855
Radius:	5729.58		
Delta:	26°47'49.38" Left		
Degree of Curvature(Arc):	1°00'00.00"		
Length:	2679.70		
Tangent:	1364.82		
Chord:	2655.35		
Middle Ordinate:	155.95		
External:	160.31		
Tangent Direction:	N 0°18'26.45" E		
Radial Direction:	S 89°41'33.55" E		
Chord Direction:	N 13°05'28.24" W		
Radial Direction:	N 63°30'37.07" E		
Tangent Direction:	N 26°29'22.93" W		
Element: Linear			
P.T. STA. (6428)	20589+63.08	145315.0154	2153385.4855
P.I. STA. (6429)	20593+39.38	145652.3227	2153218.6758
Tangent Direction:	N 26°18'50.14" W		
Tangent Length:	376.30		
Element: Linear			
P.I. STA. (6429)	20593+39.38	145652.3227	2153218.6758
P.O.E. STA. (6729)	20598+39.38	146100.5121	2152997.0312
Tangent Direction:	N 26°18'50.14" W		
Tangent Length:	500.00		

PLS		POE & ASSOCIATES, OKLAHOMA CITY, OK SURVEY DIVISION
DRAWN		**SURVEY DATA SHEET**
CHECKED		
APPROVED		
CREW	POE	SWO 29231(1) PROJECT NO. 09032(17) SHEET NO. SD21

OKLAHOMA COUNTY

Project Name: EC-1060*Crossroads
Description: survey alg for Crossroads Interchange
Horizontal Alignment Name: A016
Description: CLOVER1
Style: Default

	STATION	NORTHING	EASTING
Element: Clothoid			
T.S. STA. (6645)	80+51.88	143069.7619	2150635.8849
S.P.I. STA. (6376)	81+53.92	143086.1216	2150535.1661
S.C. STA. (6644)	82+02.58	143119.4141	2150495.6564
Entrance Radius:		0.00	
Exit Radius:		139.75	
Length:		150.70	
Angle:		30°53'34.35" Right	
Constant:		145.12	
Long Tangent:		102.04	
Short Tangent:		51.67	
Long Chord:		148.76	
Xs:		146.37	
Ys:		26.53	
P:		6.70	
K:		74.62	
Tangent Direction:		N 80°46'26.69" W	
Radial Direction:		N 9°13'33.31" E	
Chord Direction:		N 70°30'07.11" W	
Radial Direction:		N 40°07'07.67" E	
Tangent Direction:		N 49°52'52.33" W	
Element: Circular			
S.C. STA. (6644)	82+02.58	143119.4141	2150495.6564
C.C. STA. (6403)		143226.0743	2150585.9477
C.S. STA. (6643)	86+86.72	143298.5751	2150705.4157
Radius:		139.75	
Delta:		198°29'56.22" Right	
Degree of Curvature(Arc):		40°59'59.79"	
Length:		484.14	
Tangent:		-1.00	
Chord:		275.86	
Middle Ordinate:		-1.00	
External:		-1.00	
Tangent Direction:		N 49°45'03.58" W	
Radial Direction:		N 40°14'56.42" E	
Chord Direction:		N 49°29'54.53" E	
Radial Direction:		S 58°44'52.64" W	
Tangent Direction:		S 31°15'07.36" E	
Element: Clothoid			
C.S. STA. (6643)	86+86.72	143298.5751	2150705.4157
S.P.I. STA. (6374)	87+38.07	143254.8219	2150732.2986
S.T. STA. (6642)	88+36.55	143153.4000	2150733.8074
Entrance Radius:		139.75	
Exit Radius:		0.00	
Length:		149.83	
Angle:		30°42'54.74" Right	
Constant:		144.70	
Long Tangent:		101.43	
Short Tangent:		51.35	
Long Chord:		147.93	
Xs:		145.58	
Ys:		26.23	
P:		6.63	
K:		74.20	
Tangent Direction:		S 31°34'03.03" E	
Radial Direction:		S 58°25'56.97" W	
Chord Direction:		S 11°03'56.21" E	
Radial Direction:		S 89°08'51.71" W	
Tangent Direction:		S 0°51'08.29" E	

Project Name: EC-1060*Crossroads
Description: survey alg for Crossroads Interchange
Horizontal Alignment Name: A017
Description: CLOVER2
Style: Default

	STATION	NORTHING	EASTING
Element: Clothoid			
T.S. STA. (6646)	80+53.38	143073.1298	2150913.5169
S.P.I. STA. (6377)	81+55.08	143174.8210	2150912.1527
S.C. STA. (6647)	82+03.59	143219.4020	2150937.9175
Entrance Radius:		0.00	
Exit Radius:		139.75	
Length:		150.21	
Angle:		30°47'36.96" Right	
Constant:		144.88	
Long Tangent:		101.70	
Short Tangent:		51.49	
Long Chord:		148.29	
Xs:		145.93	
Ys:		26.36	
P:		6.66	
K:		74.39	
Tangent Direction:		N 0°46'06.83" W	
Radial Direction:		N 89°13'53.17" E	
Chord Direction:		N 9°28'14.52" E	
Radial Direction:		S 59°58'29.87" E	
Tangent Direction:		N 30°01'30.13" E	

Project Name: EC-1060*Crossroads
Description: survey alg for Crossroads Interchange
Horizontal Alignment Name: A017 *CONTINUED
Description: CLOVER2
Style: Default

	STATION	NORTHING	EASTING
Element: Circular			
S.C. STA. (6647)	82+03.59	143219.4020	2150937.9175
C.C. STA. (6373)		143149.0025	2151058.6356
C.S. STA. (6648)	87+36.52	143018.7604	2151109.2906
Radius:		139.75	
Delta:		218°29'52.52" Right	
Degree of Curvature(Arc):		40°59'59.79"	
Length:		532.92	
Tangent:		-1.00	
Chord:		263.87	
Middle Ordinate:		-1.00	
External:		-1.00	
Tangent Direction:		N 30°14'58.47" E	
Radial Direction:		S 59°45'01.53" E	
Chord Direction:		S 40°30'05.27" E	
Radial Direction:		N 21°15'09.01" W	
Tangent Direction:		S 68°44'50.99" W	
Element: Clothoid			
C.S. STA. (6648)	87+36.52	143018.7604	2151109.2906
S.P.I. STA. (6379)	87+87.70	143000.1760	2151061.5983
S.T. STA. (6649)	88+85.89	143016.5705	2150961.8249
Entrance Radius:		139.75	
Exit Radius:		0.00	
Length:		149.37	
Angle:		30°37'14.80" Right	
Constant:		144.48	
Long Tangent:		101.11	
Short Tangent:		51.19	
Long Chord:		147.48	
Xs:		145.16	
Ys:		26.07	
P:		6.58	
K:		73.98	
Tangent Direction:		S 68°42'37.88" W	
Radial Direction:		N 21°17'22.12" W	
Chord Direction:		S 89°08'57.21" W	
Radial Direction:		N 9°19'52.68" E	
Tangent Direction:		N 80°40'07.32" W	

Project Name: EC-1060*Crossroads
Description: survey alg for Crossroads Interchange
Horizontal Alignment Name: A018
Description: CLOVER3
Style: Default

	STATION	NORTHING	EASTING
Element: Clothoid			
T.S. STA. (6654)	79+01.74	142920.1689	2150735.8489
S.P.I. STA. (6382)	80+03.29	142818.6217	2150736.7371
S.C. STA. (6655)	80+51.74	142774.2084	2150710.8374
Entrance Radius:		0.00	
Exit Radius:		139.75	
Length:		150.00	
Angle:		30°44'59.37" Right	
Constant:		144.78	
Long Tangent:		101.55	
Short Tangent:		51.41	
Long Chord:		148.09	
Xs:		145.74	
Ys:		26.29	
P:		6.64	
K:		74.29	
Tangent Direction:		S 0°30'04.17" E	
Radial Direction:		S 89°29'55.83" W	
Chord Direction:		S 9°43'25.04" W	
Radial Direction:		N 59°45'04.80" W	
Tangent Direction:		S 30°14'55.20" W	
Element: Circular			
S.C. STA. (6655)	80+51.74	142774.2084	2150710.8374
C.C. STA. (6518)		142844.6079	2150590.1194
C.S. STA. (6656)	85+84.66	142974.8501	2150539.4644
Radius:		139.75	
Delta:		218°29'52.52" Right	
Degree of Curvature(Arc):		40°59'59.79"	
Length:		532.92	
Tangent:		-1.00	
Chord:		263.87	
Middle Ordinate:		-1.00	
External:		-1.00	
Tangent Direction:		S 30°14'58.47" W	
Radial Direction:		N 59°45'01.53" W	
Chord Direction:		N 40°30'05.27" W	
Radial Direction:		S 21°15'09.01" E	
Tangent Direction:		N 68°44'50.99" E	

POE & ASSOCIATES, OKLAHOMA CITY, OK

Project Name: EC-1060*Crossroads
Description: survey alg for Crossroads Interchange
Horizontal Alignment Name: A018 *CONTINUED
Description: CLOVER3
Style: Default

	STATION	NORTHING	EASTING
Element: Clothoid			
C.S. STA. (6656)	85+84.66	142974.8501	2150539.4644
S.P.I. STA. (6380)	86+36.07	142993.4835	2150587.3819
S.T. STA. (6657)	87+34.66	142976.7222	2150687.5396
Entrance Radius:		139.75	
Exit Radius:		0.00	
Length:		150.00	
Angle:		30°44'58.69" Right	
Constant:		144.78	
Long Tangent:		101.55	
Short Tangent:		51.41	
Long Chord:		148.09	
Xs:		145.74	
Ys:		26.29	
P:		6.64	
K:		74.28	
Tangent Direction:		N 68°45'02.58" E	
Radial Direction:		S 21°14'57.42" E	
Chord Direction:		N 89°16'32.31" E	
Radial Direction:		S 9°30'01.27" W	
Tangent Direction:		S 80°29'58.73" E	

Project Name: EC-1060*Crossroads
Description: survey alg for Crossroads Interchange
Horizontal Alignment Name: A019
Description: CLOVER4
Style: Default

	STATION	NORTHING	EASTING
Element: Clothoid			
T.S. STA. (6653)	79+01.32	142922.1852	2151013.4926
S.P.I. STA. (6383)	80+02.87	142905.4273	2151113.6508
S.C. STA. (6652)	80+51.32	142872.2095	2151152.8920
Entrance Radius:		0.00	
Exit Radius:		139.75	
Length:		150.00	
Angle:		30°44'58.60" Right	
Constant:		144.78	
Long Tangent:		101.55	
Short Tangent:		51.41	
Long Chord:		148.09	
Xs:		145.74	
Ys:		26.29	
P:		6.64	
K:		74.28	
Tangent Direction:		S 80°30'05.75" E	
Radial Direction:		S 9°29'54.25" W	
Chord Direction:		S 70°16'36.80" E	
Radial Direction:		S 40°14'52.85" W	
Tangent Direction:		S 49°45'07.15" E	
Element: Circular			
S.C. STA. (6652)	80+51.32	142872.2095	2151152.8920
C.C. STA. (6525)		142765.5493	2151062.6006
C.S. STA. (6651)	85+35.46	142693.0485	2150943.1327
Radius:		139.75	
Delta:		198°29'56.22" Right	
Degree of Curvature(Arc):		40°59'59.79"	
Length:		484.14	
Tangent:		-1.00	
Chord:		275.86	
Middle Ordinate:		-1.00	
External:		-1.00	
Tangent Direction:		S 49°45'03.58" E	
Radial Direction:		S 40°14'56.42" W	
Chord Direction:		S 49°29'54.53" W	
Radial Direction:		N 58°44'52.64" E	
Tangent Direction:		N 31°15'07.36" W	
Element: Clothoid			
C.S. STA. (6651)	85+35.46	142693.0485	2150943.1327
S.P.I. STA. (6385)	85+86.51	142736.7179	2150916.7058
S.T. STA. (6650)	86+84.44	142837.5489	2150915.5789
Entrance Radius:		139.75	
Exit Radius:		0.00	
Length:		148.98	
Angle:		30°32'24.85" Right	
Constant:		144.29	
Long Tangent:		100.84	
Short Tangent:		51.04	
Long Chord:		147.10	
Xs:		144.80	
Ys:		25.94	
P:		6.55	
K:		73.79	
Tangent Direction:		N 31°10'50.03" W	
Radial Direction:		N 58°49'09.97" E	
Chord Direction:		N 10°47'44.69" W	
Radial Direction:		N 89°21'34.82" E	
Tangent Direction:		N 0°38'25.18" W	

PLS		
DRAWN		
CHECKED		
APPROVED		
CREW	POE	

POE & ASSOCIATES, OKLAHOMA CITY, OK
SURVEY DIVISION

SURVEY DATA SHEET

SWO 232311 PROJECT NO. 03032(17) SHEET NO. SD22

OKLAHOMA COUNTY

SDS 22 OF 46

Project Name: EC-1060*Crossroads
Description: survey alg for Crossroads Interchange
Horizontal Alignment Name: A020
Description: SANTA FE/SHIELDS BLVD
Style: Default

	STATION	NORTHING	EASTING
Element: Circular			
PC. STA. (6463)	381+96.97	143105.0679	2146204.9783
P.I. STA. ( )	382+99.71	143106.0418	2146307.7135
C.C. STA. (6456)		145014.8410	2146186.8730
P.T. STA. (6464)	384+02.25	143118.0314	2146409.7514
Radius:	1909.86		
Delta:	6°09'30.44" Left		
Degree of Curvature(Arc):	3°00'00.00"		
Length:	205.28		
Tangent:	102.74		
Chord:	205.18		
Middle Ordinate:	2.76		
External:	2.76		
Tangent Direction:	N 89°27'24.60" E		
Radial Direction:	S 0°32'35.40" E		
Chord Direction:	N 86°22'39.38" E		
Radial Direction:	S 6°42'05.84" E		
Tangent Direction:	N 83°17'54.16" E		
Element: Linear			
P.T. STA. (6464)	384+02.25	143118.0314	2146409.7514
PC. STA. (6465)	385+46.86	143134.9073	2146553.3733
Tangent Direction:	N 83°17'54.15" E		
Tangent Length:	144.61		
Element: Circular			
PC. STA. (6465)	385+46.86	143134.9073	2146553.3733
P.I. STA. ( )	385+69.31	143137.5272	2146575.6700
C.C. STA. (6457)		143318.5936	2146531.7898
P.T. STA. (6466)	385+91.54	143145.4053	2146596.6924
Radius:	184.95		
Delta:	13°50'30.97" Left		
Degree of Curvature(Arc):	30°58'44.63"		
Length:	44.68		
Tangent:	22.45		
Chord:	44.57		
Middle Ordinate:	1.35		
External:	1.36		
Tangent Direction:	N 83°17'54.13" E		
Radial Direction:	S 6°42'05.87" E		
Chord Direction:	N 76°22'38.65" E		
Radial Direction:	S 20°32'36.83" E		
Tangent Direction:	N 69°27'23.17" E		
Element: Linear			
P.T. STA. (6466)	385+91.54	143145.4053	2146596.6924
P.O.E. STA. (6467)	386+02.88	143149.3848	2146607.3112
Tangent Direction:	N 69°27'23.15" E		
Tangent Length:	11.34		

Project Name: EC-1060*Crossroads
Description: survey alg for Crossroads Interchange
Horizontal Alignment Name: A021
Description: SANTA FE/SHIELDS BLVD
Style: Default

	STATION	NORTHING	EASTING
Element: Circular			
PC. STA. (6444)	379+28.21	143003.5201	2145936.2304
P.I. STA. ( )	380+49.71	143004.6719	2146057.7251
C.C. STA. (6450)		141093.7469	2145954.3356
P.T. STA. (6451)	381+70.88	142990.4184	2146178.3862
Radius:	1909.86		
Delta:	7°16'48.71" Right		
Degree of Curvature(Arc):	3°00'00.00"		
Length:	242.67		
Tangent:	121.50		
Chord:	242.51		
Middle Ordinate:	3.85		
External:	3.86		
Tangent Direction:	N 89°27'24.60" E		
Radial Direction:	S 0°32'35.40" E		
Chord Direction:	S 86°54'11.04" E		
Radial Direction:	S 6°44'13.32" W		
Tangent Direction:	S 83°15'46.68" E		
Element: Linear			
P.T. STA. (6451)	381+70.88	142990.4184	2146178.3862
PC. STA. (6452)	383+45.25	142969.9626	2146351.5522
Tangent Direction:	S 83°15'46.70" E		
Tangent Length:	174.37		
Element: Circular			
PC. STA. (6452)	383+45.25	142969.9626	2146351.5522
P.I. STA. ( )	383+68.99	142967.1776	2146375.1284
C.C. STA. (6453)		142758.4442	2146326.5660
P.T. STA. (6454)	383+92.54	142959.2697	2146397.5127
Radius:	212.99		
Delta:	12°43'12.23" Right		
Degree of Curvature(Arc):	26°54'02.94"		
Length:	47.29		
Tangent:	23.74		
Chord:	47.19		
Middle Ordinate:	1.31		
External:	1.32		
Tangent Direction:	S 83°15'46.81" E		
Radial Direction:	S 6°44'13.19" W		
Chord Direction:	S 76°54'10.70" E		
Radial Direction:	S 19°27'25.41" W		
Tangent Direction:	S 70°32'34.59" E		

SDS 23 OF 46

Project Name: EC-1060*Crossroads
Description: survey alg for Crossroads Interchange
Horizontal Alignment Name: A021 *CONTINUED
Description: SANTA FE/SHIELDS BLVD
Style: Default

	STATION	NORTHING	EASTING
Element: Linear			
P.T. STA. (6454)	383+92.54	142959.2697	2146397.5127
P.O.E. STA. (6455)	384+03.88	142955.4924	2146408.2051
Tangent Direction:	S 70°32'34.70" E		
Tangent Length:	11.34		

Project Name: EC-1060*Crossroads
Description: survey alg for Crossroads Interchange
Horizontal Alignment Name: A022
Description: SHIELDS BLVD/BYERS AVE
Style: Default

	STATION	NORTHING	EASTING
Element: Linear			
P.O.B. STA. (6481)	402+02.75	143155.8771	2148209.8436
PC. STA. (6482)	402+14.09	143152.0997	2148220.5360
Tangent Direction:	S 70°32'35.38" E		
Tangent Length:	11.34		
Element: Circular			
PC. STA. (6482)	402+14.09	143152.0997	2148220.5360
P.I. STA. ( )	402+36.54	143144.6217	2148241.7040
C.C. STA. (6498)		143326.4878	2148282.1422
P.T. STA. (6483)	402+58.77	143142.4251	2148264.0464
Radius:	184.95		
Delta:	13°50'30.97" Left		
Degree of Curvature(Arc):	30°58'44.63"		
Length:	44.68		
Tangent:	22.45		
Chord:	44.57		
Middle Ordinate:	1.35		
External:	1.36		
Tangent Direction:	S 70°32'35.40" E		
Radial Direction:	S 19°27'24.60" W		
Chord Direction:	S 77°27'50.88" E		
Radial Direction:	S 5°36'53.64" W		
Tangent Direction:	S 84°23'06.36" E		
Element: Linear			
P.T. STA. (6483)	402+58.77	143142.4251	2148264.0464
PC. STA. (6484)	404+03.38	143128.2763	2148407.9626
Tangent Direction:	S 84°23'06.38" E		
Tangent Length:	144.61		
Element: Circular			
PC. STA. (6484)	404+03.38	143128.2763	2148407.9626
P.I. STA. ( )	405+06.11	143118.2247	2148510.2029
C.C. STA. (6406)		145028.9717	2148594.8264
P.T. STA. (6485)	406+08.65	143119.1986	2148612.9316
Radius:	1909.86		
Delta:	6°09'29.03" Left		
Degree of Curvature(Arc):	3°00'00.00"		
Length:	205.27		
Tangent:	102.73		
Chord:	205.17		
Middle Ordinate:	2.76		
External:	2.76		
Tangent Direction:	S 84°23'06.36" E		
Radial Direction:	S 5°36'53.64" W		
Chord Direction:	S 87°27'50.88" E		
Radial Direction:	S 0°32'35.40" E		
Tangent Direction:	N 89°27'24.60" E		

POE & ASSOCIATES, OKLAHOMA CITY, OK

Project Name: EC-1060*Crossroads
Description: survey alg for Crossroads Interchange
Horizontal Alignment Name: A023
Description: SHIELDS BLVD/BYERS AVE
Style: Default

	STATION	NORTHING	EASTING
Element: Linear			
P.O.B. STA. (6475)	403+50.48	142973.9626	2148359.2990
PC. STA. (6476)	403+61.82	142977.9419	2148369.9178
Tangent Direction:	N 69°27'24.62" E		
Tangent Length:	11.34		
Element: Circular			
PC. STA. (6476)	403+61.82	142977.9419	2148369.9178
P.I. STA. ( )	403+85.80	142986.3566	2148392.3722
C.C. STA. (6408)		142773.4435	2148446.5523
P.T. STA. (6477)	404+09.59	142989.6984	2148416.1175
Radius:	218.39		
Delta:	12°31'55.92" Right		
Degree of Curvature(Arc):	26°14'09.65"		
Length:	47.77		
Tangent:	23.98		
Chord:	47.67		
Middle Ordinate:	1.30		
External:	1.31		
Tangent Direction:	N 69°27'24.66" E		
Radial Direction:	S 20°32'35.34" E		
Chord Direction:	N 75°43'22.62" E		
Radial Direction:	S 8°00'39.42" E		
Tangent Direction:	N 81°59'20.58" E		
Element: Linear			
P.T. STA. (6477)	404+09.59	142989.6984	2148416.1175
PC. STA. (6478)	404+79.63	142999.4593	2148485.4740
Tangent Direction:	N 81°59'20.62" E		
Tangent Length:	70.04		
Element: Circular			
PC. STA. (6478)	404+79.63	142999.4593	2148485.4740
P.I. STA. ( )	406+04.27	143016.8293	2148608.8973
C.C. STA. (6407)		141108.2377	2148751.6362
P.T. STA. (6479)	407+28.55	143018.0109	2148733.5312
Radius:	1909.86		
Delta:	7°28'04.03" Right		
Degree of Curvature(Arc):	3°00'00.00"		
Length:	248.93		
Tangent:	124.64		
Chord:	248.75		
Middle Ordinate:	4.05		
External:	4.06		
Tangent Direction:	N 81°59'20.61" E		
Radial Direction:	S 8°00'39.39" E		
Chord Direction:	N 85°43'22.62" E		
Radial Direction:	S 0°32'35.37" E		
Tangent Direction:	N 89°27'24.63" E		

Project Name: EC-1060*Crossroads
Description: survey alg for Crossroads Interchange
Horizontal Alignment Name: A024
Description: NE of Pole Rd
Style: Default

	STATION	NORTHING	EASTING
Element: Circular			
PC. STA. (6591)	454+00.27	142973.5321	2153403.7572
P.I. STA. ( )	459+07.74	142977.1456	2153911.2149
C.C. STA. (6347)		143048.5302	2153403.2231
P.T. STA. (6592)	456+13.88	143120.4766	2153424.4063
Radius:	75.00		
Delta:	163°11'09.67" Left		
Degree of Curvature(Arc):	76°23'39.74"		
Length:	213.61		
Tangent:	507.47		
Chord:	148.39		
Middle Ordinate:	64.03		
External:	437.98		
Tangent Direction:	N 89°35'31.27" E		
Radial Direction:	S 0°24'28.73" E		
Chord Direction:	N 7°59'56.44" E		
Radial Direction:	N 16°24'21.60" E		
Tangent Direction:	N 73°35'38.40" W		

PLS		POE & ASSOCIATES, OKLAHOMA CITY, OK SURVEY DIVISION
DRAWN		**SURVEY DATA SHEET**
CHECKED		
APPROVED		
CREW	POE	SWO 292311 PROJECT NO. 09032(17) SHEET NO. SDS3

OKLAHOMA COUNTY

Project Name: EC-1060*Crossroads
Description: survey alg for Crossroads Interchange
Horizontal Alignment Name: A025
Description: SE of Pole Rd
Style: Default

	STATION	NORTHING	EASTING
Element: Circular			
PC. STA. (6575)	452+14.60	142861.2069	2153218.8859
P.I. STA. ( )	457+45.46	142865.0042	2153749.7368
C.C. STA. (6338)		142636.2127	2153220.4953
P.T. STA. (6574)	457+41.06	142480.9001	2153383.2928
Radius:	225.00		
Delta:	134°03'43.01" Right		
Degree of Curvature(Arc):	25°27'53.25"		
Length:	526.46		
Tangent:	530.86		
Chord:	414.32		
Middle Ordinate:	137.20		
External:	351.58		
Tangent Direction:	N 89°35'24.58" E		
Radial Direction:	S 0°24'35.42" E		
Chord Direction:	S 23°22'43.92" E		
Radial Direction:	N 46°20'52.41" W		
Tangent Direction:	S 43°39'07.59" W		

Project Name: EC-1060*Crossroads
Description: survey alg for Crossroads Interchange
Horizontal Alignment Name: A026
Description: RAMP E of Eastern Ave
Style: Default

	STATION	NORTHING	EASTING
Element: Linear			
P.O.B. STA. (6637)	484+39.48	143279.5837	2156448.1402
PC. STA. (6638)	485+41.44	143177.6229	2156448.5358
Tangent Direction:	S 0°13'20.40" E		
Tangent Length:	101.96		
Element: Circular			
PC. STA. (6638)	485+41.44	143177.6229	2156448.5358
P.I. STA. ( )	486+78.83	143040.2382	2156449.0646
C.C. STA. (6361)		143178.2003	2156598.5347
P.T. STA. (6639)	487+63.90	143028.7277	2156585.9674
Radius:	150.00		
Delta:	84°58'24.46" Left		
Degree of Curvature(Arc):	38°11'49.87"		
Length:	222.46		
Tangent:	137.39		
Chord:	202.63		
Middle Ordinate:	39.38		
External:	53.41		
Tangent Direction:	S 0°13'13.94" E		
Radial Direction:	S 89°46'46.06" W		
Chord Direction:	S 42°42'26.17" E		
Radial Direction:	S 4°48'21.60" W		
Tangent Direction:	S 85°11'38.40" E		
Element: Linear			
P.T. STA. (6639)	487+63.90	143028.7277	2156585.9674
P.I. STA. (6640)	493+82.16	142976.9285	2157202.0536
Tangent Direction:	S 85°11'38.40" E		
Tangent Length:	618.26		
Element: Linear			
P.I. STA. (6640)	493+82.16	142976.9285	2157202.0536
P.O.E. STA. (6641)	497+84.73	142943.2003	2157603.2082
Tangent Direction:	S 85°11'38.40" E		
Tangent Length:	402.57		

Project Name: EC-1060*Crossroads
Description: survey alg for Crossroads Interchange
Horizontal Alignment Name: A027
Description: RAMP W of Eastern Ave
Style: Default

	STATION	NORTHING	EASTING
Element: Linear			
P.O.B. STA. (6636)	460+03.54	142948.3050	2154007.2193
PC. STA. (6635)	461+89.18	142949.6329	2154192.8546
Tangent Direction:	N 89°35'24.59" E		
Tangent Length:	185.64		
Element: Circular			
PC. STA. (6635)	461+89.18	142949.6329	2154192.8546
P.I. STA. ( )	463+03.77	142948.1609	2154307.4340
C.C. STA. (6360)		154407.8474	2154340.0543
P.T. STA. (6634)	464+18.35	142948.9806	2154422.0198
Radius:	11459.16		
Delta:	1°08'45.06" Left		
Degree of Curvature(Arc):	0°30'00.00"		
Length:	229.17		
Tangent:	114.59		
Chord:	229.17		
Middle Ordinate:	0.57		
External:	0.57		
Tangent Direction:	S 89°15'50.33" E		
Radial Direction:	S 0°44'09.67" W		
Chord Direction:	S 89°50'12.86" E		
Radial Direction:	S 0°24'35.39" E		
Tangent Direction:	N 89°35'24.61" E		

Project Name: EC-1060*Crossroads
Description: survey alg for Crossroads Interchange
Horizontal Alignment Name: A027 *CONTINUED
Description: RAMP W of Eastern Ave
Style: Default

	STATION	NORTHING	EASTING
Element: Linear			
P.T. STA. (6634)	464+18.35	142948.9806	2154422.0198
P.I. STA. (6633)	465+03.76	142949.5915	2154507.4277
Tangent Direction:	N 89°35'24.57" E		
Tangent Length:	85.41		
Element: Linear			
P.I. STA. (6633)	465+03.76	142949.5915	2154507.4277
PC. STA. (6632)	474+04.46	142964.0988	2155408.0108
Tangent Direction:	N 89°04'37.61" E		
Tangent Length:	900.70		
Element: Circular			
PC. STA. (6632)	474+04.46	142964.0988	2155408.0108
P.I. STA. ( )	474+82.01	142965.3478	2155485.5497
C.C. STA. (6359)		145828.5173	2155361.8719
P.C.C. STA. (6631)	475+59.52	142970.7898	2155562.9075
Radius:	2864.79		
Delta:	3°06'04.32" Left		
Degree of Curvature(Arc):	2°00'00.00"		
Length:	155.06		
Tangent:	77.55		
Chord:	155.04		
Middle Ordinate:	1.05		
External:	1.05		
Tangent Direction:	N 89°04'37.86" E		
Radial Direction:	S 0°55'22.14" E		
Chord Direction:	N 87°31'35.70" E		
Radial Direction:	S 4°01'26.46" E		
Tangent Direction:	N 85°58'33.54" E		
Element: Circular			
P.C.C. STA. (6631)	475+59.52	142970.7898	2155562.9075
P.I. STA. ( )	476+36.85	142976.2166	2155640.0452
C.C. STA. (6358)		143685.2239	2155512.6455
P.T. STA. (6630)	477+13.58	142997.9835	2155714.2468
Radius:	716.20		
Delta:	12°19'29.11" Left		
Degree of Curvature(Arc):	7°59'59.89"		
Length:	154.06		
Tangent:	77.33		
Chord:	153.76		
Middle Ordinate:	4.14		
External:	4.16		
Tangent Direction:	N 85°58'32.69" E		
Radial Direction:	S 4°01'27.31" E		
Chord Direction:	N 79°48'48.14" E		
Radial Direction:	S 16°20'56.41" E		
Tangent Direction:	N 73°39'03.59" E		
Element: Linear			
P.T. STA. (6630)	477+13.58	142997.9835	2155714.2468
PC. STA. (6629)	478+73.60	143043.0271	2155867.7964
Tangent Direction:	N 73°39'03.67" E		
Tangent Length:	160.02		
Element: Circular			
PC. STA. (6629)	478+73.60	143043.0271	2155867.7964
P.I. STA. ( )	479+67.58	143069.4790	2155957.9775
C.C. STA. (6357)		143162.9737	2155832.6137
P.T. STA. (6628)	480+34.77	143163.4587	2155957.6128
Radius:	125.00		
Delta:	73°52'29.62" Left		
Degree of Curvature(Arc):	45°50'11.84"		
Length:	161.17		
Tangent:	93.98		
Chord:	150.24		
Middle Ordinate:	25.09		
External:	31.39		
Tangent Direction:	N 73°39'09.18" E		
Radial Direction:	S 16°20'50.82" E		
Chord Direction:	N 36°42'54.37" E		
Radial Direction:	N 89°46'39.56" E		
Tangent Direction:	N 0°13'20.44" W		
Element: Linear			
P.T. STA. (6628)	480+34.77	143163.4587	2155957.6128
P.O.E. STA. (6627)	481+37.66	143266.3435	2155957.2135
Tangent Direction:	N 0°13'20.46" W		
Tangent Length:	102.89		

Project Name: EC-1060*Crossroads
Description: survey alg for Crossroads Interchange
Horizontal Alignment Name: A028
Description: RAMP SE of I-35
Style: Default

	STATION	NORTHING	EASTING
Element: Circular			
PC. STA. (6609)	61+24.30	141145.5900	2151069.7825
P.I. STA. ( )	62+45.08	141200.8776	2150962.3940
C.C. STA. (6362)		141323.4077	2151161.3296
P.T. STA. (6611)	63+41.62	141321.6579	2150961.3373
Radius:	200.00		
Delta:	62°15'27.49" Right		
Degree of Curvature(Arc):	28°38'52.40"		
Length:	217.32		
Tangent:	120.78		
Chord:	206.79		
Middle Ordinate:	28.80		
External:	33.64		
Tangent Direction:	N 62°45'32.11" W		
Radial Direction:	N 27°14'27.89" E		
Chord Direction:	N 31°37'48.37" W		
Radial Direction:	N 89°29'55.37" E		
Tangent Direction:	N 0°30'04.63" W		

Project Name: EC-1060*Crossroads
Description: survey alg for Crossroads Interchange
Horizontal Alignment Name: A029
Description: SE 59TH ST
Style: Default

	STATION	NORTHING	EASTING
Element: Linear			
P.O.B. STA. (6432)	95+00.00	148281.8565	2150629.0492
P.I. STA. (3169)	97+60.93	148284.7529	2150889.9611
Tangent Direction:	N 89°21'50.32" E		
Tangent Length:	260.93		
Element: Linear			
P.I. STA. (3169)	97+60.93	148284.7529	2150889.9611
P.I. STA. (1076)	100+00.01	148285.8404	2151129.0452
Tangent Direction:	N 89°44'21.76" E		
Tangent Length:	239.09		
Element: Linear			
P.I. STA. (1076)	100+00.01	148285.8404	2151129.0452
P.O.E. STA. (6433)	105+00.01	148288.1146	2151629.0400
Tangent Direction:	N 89°44'21.83" E		
Tangent Length:	500.00		

Project Name: EC-1060*Crossroads
Description: survey alg for Crossroads Interchange
Horizontal Alignment Name: A030
Description: SE 66TH ST
Style: Default

	STATION	NORTHING	EASTING
Element: Linear			
P.O.B. STA. (6434)	204+02.99	145632.8756	2150308.8319
P.I. STA. (6007)	209+02.99	145637.9859	2150808.8068
Tangent Direction:	N 89°24'51.81" E		
Tangent Length:	500.00		
Element: Linear			
P.I. STA. (6007)	209+02.99	145637.9859	2150808.8068
P.I. STA. (3040)	210+00.01	145638.9775	2150905.8228
Tangent Direction:	N 89°24'51.84" E		
Tangent Length:	97.02		
Element: Linear			
P.I. STA. (3040)	210+00.01	145638.9775	2150905.8228
P.O.E. STA. (6431)	214+02.99	145641.3027	2151308.7961
Tangent Direction:	N 89°40'09.86" E		
Tangent Length:	402.98		

Project Name: EC-1060*Crossroads
Description: survey alg for Crossroads Interchange
Horizontal Alignment Name: A031
Description: SE 82ND ST
Style: Default

	STATION	NORTHING	EASTING
Element: Linear			
P.O.B. STA. (6435)	10+00.00	140344.3985	2150347.8788
P.I. STA. (6436)	15+00.00	140349.2465	2150847.8553
Tangent Direction:	N 89°26'40.01" E		
Tangent Length:	500.00		
Element: Linear			
P.I. STA. (6436)	15+00.00	140349.2465	2150847.8553
P.I. STA. (6437)	15+97.21	140350.1890	2150945.0567
Tangent Direction:	N 89°26'40.00" E		
Tangent Length:	97.21		
Element: Linear			
P.I. STA. (6437)	15+97.21	140350.1890	2150945.0567
P.O.E. STA. (6438)	20+00.00	140353.1779	2151347.8356
Tangent Direction:	N 89°34'29.43" E		
Tangent Length:	402.79		

PLS		
DRAWN		
CHECKED		
APPROVED		
CREW	POE	

POE & ASSOCIATES, OKLAHOMA CITY, OK
SURVEY DIVISION

SURVEY DATA SHEET

SWO 2923(1) PROJECT NO. 03032(17) SHEET NO. SD24

OKLAHOMA COUNTY

Project Name: EC-1060*Crossroads
Description: survey alg for Crossroads Interchange
Horizontal Alignment Name: A032
Description: RAMP N of 66TH ST
Style: Default

		STATION	NORTHING	EASTING
Element: Linear				
P.O.B. STA.	(6519)	108+36.33	145854.8320	2150697.5039
PC. STA.	(6520)	108+50.48	145867.1285	2150704.5051
Tangent Direction:		N 29°39'20.67" E		
Tangent Length:		14.15		
Element: Circular				
PC. STA.	(6520)	108+50.48	145867.1285	2150704.5051
P.I. STA.	( )	108+56.33	145872.2159	2150707.4017
C.C. STA.	(6332)		145879.4980	2150682.7797
P.T. STA.	(6521)	108+61.98	145878.0604	2150707.7383
Radius:		25.00		
Delta:		26°21'31.33" Left		
Degree of Curvature(Arc):		229°10'59.22"		
Length:		11.50		
Tangent:		5.85		
Chord:		11.40		
Middle Ordinate:		0.66		
External:		0.68		
Tangent Direction:		N 29°39'18.84" E		
Radial Direction:		S 60°20'41.16" E		
Chord Direction:		N 16°28'33.17" E		
Radial Direction:		S 86°42'12.50" E		
Tangent Direction:		N 3°17'47.50" E		
Element: Linear				
P.T. STA.	(6521)	108+61.98	145878.0604	2150707.7383
PC. STA.	(6522)	114+45.63	146460.7450	2150741.2951
Tangent Direction:		N 3°17'45.67" E		
Tangent Length:		583.65		
Element: Circular				
PC. STA.	(6522)	114+45.63	146460.7450	2150741.2951
P.I. STA.	( )	115+27.47	146542.4496	2150746.0004
C.C. STA.	(6333)		146350.9383	2152647.9948
P.T. STA.	(6523)	116+09.21	146623.4523	2150757.6780
Radius:		1909.86		
Delta:		4°54'26.64" Right		
Degree of Curvature(Arc):		3°00'00.00"		
Length:		163.58		
Tangent:		81.84		
Chord:		163.53		
Middle Ordinate:		1.75		
External:		1.75		
Tangent Direction:		N 3°17'45.67" E		
Radial Direction:		S 86°42'14.33" E		
Chord Direction:		N 5°44'58.99" E		
Radial Direction:		S 81°47'47.69" E		
Tangent Direction:		N 8°12'12.31" E		
Element: Linear				
P.T. STA.	(6523)	116+09.21	146623.4523	2150757.6780
P.O.E. STA.	(6524)	117+22.19	146735.2762	2150773.7989
Tangent Direction:		N 8°12'12.31" E		
Tangent Length:		112.98		

Project Name: EC-1060*Crossroads
Description: survey alg for Crossroads Interchange
Horizontal Alignment Name: A033
Description: RAMP SE 59TH ST
Style: Default

		STATION	NORTHING	EASTING
Element: Circular				
PC. STA.	(6551)	118+98.74	146912.5656	2150877.5204
P.I. STA.	( )	121+16.91	147129.7417	2150898.3511
C.C. STA.	(6334)		146730.2164	2152778.6543
P.T. STA.	(6550)	123+33.20	147336.6247	2150967.6242
Radius:		1909.86		
Delta:		13°02'01.92" Right		
Degree of Curvature(Arc):		3°00'00.00"		
Length:		434.46		
Tangent:		218.17		
Chord:		433.53		
Middle Ordinate:		12.34		
External:		12.42		
Tangent Direction:		N 5°28'43.77" E		
Radial Direction:		S 84°31'16.23" E		
Chord Direction:		N 11°59'44.73" E		
Radial Direction:		S 71°29'14.31" E		
Tangent Direction:		N 18°30'45.69" E		
Element: Linear				
P.T. STA.	(6550)	123+33.20	147336.6247	2150967.6242
P.I. STA.	(6549)	123+52.20	147342.6575	2150949.6074
Tangent Direction:		N 71°29'14.30" W		
Tangent Length:		19.00		
Element: Linear				
P.I. STA.	(6549)	123+52.20	147342.6575	2150949.6074
PC. STA.	(6548)	125+65.37	147544.7967	2151017.2920
Tangent Direction:		N 18°30'45.70" E		
Tangent Length:		213.17		
Element: Circular				
PC. STA.	(6548)	125+65.37	147544.7967	2151017.2920
P.I. STA.	( )	126+31.63	147607.6266	2151038.3301
C.C. STA.	(6335)		148013.5352	2149617.4112
P.T. STA.	(6547)	126+97.80	147672.0887	2151053.6550
Radius:		1476.27		
Delta:		5°08'22.89" Left		
Degree of Curvature(Arc):		3°52'52.00"		
Length:		132.43		
Tangent:		66.26		
Chord:		132.38		
Middle Ordinate:		1.48		
External:		1.49		
Tangent Direction:		N 18°30'45.71" E		
Radial Direction:		S 71°29'14.29" E		
Chord Direction:		N 15°56'34.26" E		
Radial Direction:		S 76°37'37.19" E		
Tangent Direction:		N 13°22'22.81" E		

Project Name: EC-1060*Crossroads
Description: survey alg for Crossroads Interchange
Horizontal Alignment Name: A036
Description:
Style: Default

		STATION	NORTHING	EASTING
Element: Linear				
P.O.B. STA.	(6662)	121+03.47	147128.1840	2150795.2048
P.O.E. STA.	(6663)	126+27.61	147647.8237	2150863.7415
Tangent Direction:		N 7°30'48.72" E		
Tangent Length:		524.14		

Project Name: EC-1060*Crossroads
Description: survey alg for Crossroads Interchange
Horizontal Alignment Name: A036-1
Description:
Style: Default

		STATION	NORTHING	EASTING
Element: Linear				
P.O.B. STA.	(6664)	125+41.98	147565.9896	2150864.0401
PC. STA.	(6665)	126+22.81	147645.5052	2150878.5574
Tangent Direction:		N 10°20'47.73" E		
Tangent Length:		80.83		
Element: Circular				
PC. STA.	(6665)	126+22.81	147645.5052	2150878.5574
P.I. STA.	( )	127+53.12	147773.6985	2150901.9619
C.C. STA.	(6668)		147895.6423	2149508.4761
P.T. STA.	(6666)	128+82.68	147904.0104	2150901.1789
Radius:		1392.73		
Delta:		10°41'27.07" Left		
Degree of Curvature(Arc):		4°06'50.13"		
Length:		259.87		
Tangent:		130.31		
Chord:		259.49		
Middle Ordinate:		6.06		
External:		6.08		
Tangent Direction:		N 10°20'47.74" E		
Radial Direction:		S 79°39'12.26" E		
Chord Direction:		N 5°00'04.21" E		
Radial Direction:		N 89°39'20.67" E		
Tangent Direction:		N 0°20'39.33" W		
Element: Linear				
P.T. STA.	(6666)	128+82.68	147904.0104	2150901.1789
P.O.E. STA.	(6667)	129+43.46	147964.7893	2150900.8138
Tangent Direction:		N 0°20'39.33" W		
Tangent Length:		60.78		

PLS			POE & ASSOCIATES, OKLAHOMA CITY, OK SURVEY DIVISION
DRAWN			**SURVEY DATA SHEET**
CHECKED			
APPROVED			
CREW	POE		SWO 292311 PROJECT NO. 0903211 SHEET NO. SD25

OKLAHOMA COUNTY

POE & ASSOCIATES, OKLAHOMA CITY, OK

SEC.28, T-11-N, R-3-W

SEC.27, T-11-N, R-3-W

SEC.33, T-11-N, R-3-W

SEC.34, T-11-N, R-3-W

END.A011
P.O.T. STA.105+96.72 ℄ A011
•STA.105+96.72 FAP IR-240-1(323)
X•2145,637.0388 Y•143,544.2060

BEG.A034 SURVEY
P.O.T. STA.371+39.31 ℄ A034 SURVEY
•STA.371+39.60 FAP IR-240-1(323)
X•2145,147.3663 Y•143,039.5414

P.O.T. STA.371+39.31 ℄ A034 SURVEY
(•376+33.72 FAP IR-240-1(323))
376+33.43

P.O.T. STA.376+33.43 ℄ A034 SURVEY
• STA.376+33.72 FAP IR-240-1(323)
P.I. STA.100+96.72 ℄ A011 SURVEY
N-S SEC.LINE 96.724' S.TO SEC.COR.
2,736,652' S.TO 1/4 SEC.COR.
2,534,495' N.TO 1/4 SEC.COR.
X•2,145,641.4636 Y•143,044.2256

N-S SEC.LINE N5308

BEG. ℄ A001
P.O.T. STA.376+33.52 ℄ A001 142'LT
•STA.376+32.46 FAP IR-240-1(323)
X•2,145,640.2073 Y•143,186.1800

N 0°30'25.38" W 300.00'

N 0°30'25.38" W 142.22'

N 0°30'25.38" W 2631.29'

N 0°28'36.84" W 2639.928'

N 0°28'36.84" W 401.38'

S17°45'00.92"W 200.000'

MODJESKA DEV.CO.TRUSTEE

SANTA FE AVE.

50'

S 43°30'15.31" E 72.26'

BM#14 -"□" ON N.W. COR. WTR. VAULT
E. OF SANTA FE 152.94' LT. ℄ A034
A034 STA. 377+02.13

BM#13 -"□" ON CONC. BASE TRAFFIC
CONTROL BOX. 136.04' LT. ℄ A034
A034 STA. 379+06.84

BM#12 -"□" ON CURB ⊕ P.I. OF S. SIDE OF
PARKING LOT S. OF PAYLESS SHOES.
152.24' LT. ℄ A034
A034 STA. 385+73.15

BM#15 -"X" ON CURB ⊕ P.I. OF
PARKING LOT N.W. OF BATTERIES
PLUS. 157.07' RT. ℄ A034
A034 STA. 377+33.76

BM#16 -"X" ON N. CURB OF PARKING
LOT OF WALMART 148.89' RT. ℄ A034
A034 STA. 383+25.73

PRES.R/W

℄ A001

℄ A003

℄ SURVEY A034

℄ A020

℄ A021

E-W SEC.LINE

N 89°27'24.62" E 2360.69

N 89°27'41.44" E 2640.876'

S 88°02'20.27" E 405.32

S88°05'29.53"E

501.40'

575.48'

CURVE NO. A001-1

N 89°27'24.62" E 466.65

S89°27'24.62"E

350.00'

CURVE NO. A020-2

144.61

N83°11'54.5"E

11.34

N69°27'23.5"E

CURVE NO. A020-1

CURVE NO. A021-1

174.37

S83°15'46.7"O E

11.34

S7°03'23.47"O E

CURVE NO. A003-1

N 86°53'40.16" E 150.21'

N 86°56'08.72" E 425.382'

N85°41'01.3"E 375.51'

N 89°27'41.44" E 391.715'

523.50

N89°27'24.62"E

CALCULATED POINT

CALCULATED POINT

*4 REBAR

*4 REBAR

*4 REBAR

*4 REBAR

*4 REBAR

*4 REBAR

100.000'

100.000'

105.000'

150.000'

174.959'

S 89°09'49.9"E

N 43°12'32.16" E 72.31'

15' OKC ESMNT

50' OKC EASEMENT

15' OKC U/E

10' OGE U/E

10' ONG U/E

'X' ON CONC.

*4 REBAR

BEG. ℄ A011
P.O.T. STA.95+96.72 ℄ A011
•STA.95+96.72 FAP IR-240-1(323)
X•2,145,645.5762 Y•142,544.2397

BEG. ℄ A020
P.O.T. STA.381+96.97 ℄ A020
•STA.0+00 FAP U-386(1)
X•2,146,204.9783 Y•143,050.679

P.C. STA.380+38.84 ℄ A001
X•2,146,045.3005 Y•143,172.6818

P.T. STA.381+61.42 ℄ A001
X•2,146,167.8638 Y•143,171.2215

P.I. STA.384+02.25 ℄ A020
X•2,146,409.7514 Y•143,180.3114

P.T. STA.384+02.25 ℄ A020
X•2,146,409.7514 Y•143,180.3114

P.C. STA.385+46.86 ℄ A020
X•2,146,553.3733 Y•143,134.9073

P.C. STA.385+91.54 ℄ A020
X•2,146,596.6924 Y•143,145.4053

END. ℄ A020
P.O.T. STA.386+02.88 ℄ A020 96'LT.
•STA.4+06.67 FAP U-386(1)
X•2,146,607.3112 Y•143,149.3848

235.000'

*4 REBAR

BM#12

BM#16

P.I. STA.380+17.88 ℄ A021
X•2,146,178.3862 Y•142,990.4184

P.T. STA.381+92.46 ℄ A003
X•2,146,200.7356 Y•142,927.5220

P.C. STA.380+08.81 ℄ A003
X•2,146,017.2679 Y•142,918.8975

P.I. STA.383+45.25 ℄ A021
X•2,146,351.5522 Y•142,969.9626

P.I. STA.383+92.54 ℄ A021
X•2,146,397.5127 Y•142,959.2697

END. ℄ A021
P.O.T. STA.384+03.88 ℄ A021 96'LT.
•STA.4+76.39 FAP U-386(1)
X•2,146,408.2051 Y•142,955.4924

Curve No.A020-1
P.I. Sta. 382+99.71
N: 143106.0418
E: 2146307.7135
Δ= 6°09'30.44" LT.
D= 3°00'00.00"
T= 102.74'
L= 205.28'
R= 1909.86'
LC= 205.1830'
C= N86°22'39.38"E

Curve No.A020-2
P.I. Sta. 385+69.31
N: 143137.5272
E: 2146575.6700
Δ= 13°50'31.24" LT.
D= 30°58'45.23"
T= 22.45'
L= 44.68'
R= 184.95'
LC= 44.573'
C= N76°22'38.65E

CURVE NO. A001-1
P.I. STA. 381+00.14
N: 143170.6403
E: 2146106.5565
Δ= 2°27'05.86" LT.
D= 2°00'00.00"
T= 61.30'
L= 122.58'
R= 2864.79'
LC= 122.5620'
C= S89°19'02.45"E

CURVE NO. A021-1
P.I. Sta. 380+49.71
N: 143004.6719
E: 2146057.7251
Δ= 7°16'48.71" RT.
D= 3°00'00.00"
T= 121.50'
L= 242.67'
R= 1909.86'
LC= 242.51'
C= S86°54'11.04E.

Curve A003-1
P.I. Sta. 381+00.67
N: 142926.6512
E: 2146108.8795
Δ= 3°40'23.34" RT.
D= 2°00'00.00"
T= 91.86'
L= 183.66'
R= 2864.79'
LC= 183.626'
C= N87°37'12.97E

Curve A021-2
P.I. Sta. 383+68.99
N: 142967.1776
E: 2146375.1284
Δ= 12°43'12.23" RT.
D= 26°54'02.94"
T= 23.74'
L= 47.29'
R= 212.99'
LC= 47.188'
C= S76°54'10.7E

SCALE: 1" = 50'

PLS			POE & ASSOCIATES, OKLAHOMA CITY, OK
DRAWN			SURVEY DIVISION
CHECKED			**SURVEY DATA SHEET**
APPROVED			
CREW	POE		SWO 29231(1) PROJECT NO. 09031(17) SHEET NO. SD26

SDS 26 OF 46

OKLAHOMA COUNTY

POE & ASSOCIATES, OKLAHOMA CITY, OK

SEC. 27, T-11-N, R-3-W

BM#11 -"X" ON CURB IN PARKING LOT W. OF SHIELDS 453.49' LT. ℄ A034 (CONTROL PT. "O-55-1838") A034 STA. 391+00.77

BM#10 - "X" ON CURB @ P.I. S. COR. PARKING LOT OF VALERO GAS STA. 176.68' LT, ℄ A034 A034 STA. 394+01.73

BM#9 - "X" ON CURB @ INLET S. PARKING LOT OF HOME DEPOT 175.60' LT, ℄ A034 A034 STA. 399+94.10

CURVE NO. A001-2
P.I. STA. 387+50.12
N: 143167.9547
E: 2146756.5375
Δ= 2°26'26.28" LT.
D= 1°00'00.00"
T= 122.05'
L= 244.06'
R= 5729.58'
LC= 244.045'
C= N88°14'11.48"E

CURVE NO. A001-3
P.I. STA. 400+04.34
N: 143179.9811
E: 2148009.8505
Δ= 1°54'06.00" LT.
D= 1°00'00.00"
T= 95.09'
L= 190.17'
R= 5729.58'
LC= 190.1580'
C= S89°35'32.38"E

Curve NO. A003-2
P.I. Sta. 388+00.60
N: 142933.2871
E: 2146808.8480
Δ= 2°32'19.60" RT.
D= 1°30'00.00"
T= 84.64'
L= 169.25'
R= 3819.72'
LC= 169.238
C= S89°16'25.57"E

BM#18 -"X" ON E. CURB OF 3RD ENTR. FROM W. ON N. SIDE NISSAN DEALERSHIP. 139.51' RT. ℄ A034 A034 STA. 389+27.33

BM#20- "X" ON CONC. BASE OF LIGHT POLE N. OF ENTERPRISE RENTAL. 155.12' RT. ℄ A034 A034 STA. 395+58.73

SCALE: 1" = 50'

SDS 27 OF 46

PLS			POE & ASSOCIATES, OKLAHOMA CITY, OK SURVEY DIVISION
DRAWN			SURVEY DATA SHEET
CHECKED			
APPROVED			
CREW	POE		SWO 292311 PROJECT NO. 0803(117) SHEET NO. 5027

OKLAHOMA COUNTY

POE & ASSOCIATES, OKLAHOMA CITY, OK

SEC.27, T-11-N, R-3-W

BM8 - "X" ON CURB @ 521 S.E.
72ND STREET 317.43' LT. ℄ A034
A034 STA. 406+48.06

BM#7- "X" ON CURB @ 521 S.E.
73RD STREET 323.22' LT. ℄ A034
A034 STA. 412+45.47

PLATTED 15' U/E

CLOVER LEAF MANOR ADDITION

BYERS AVE.

72ND STREET

73RD STREET

BLOCKLINE

PRES.R/W

Curve No. A022-2
P.I. Sta. 405+06.11
N: 143118.2247
E: 2148510.2029
Δ= 6°09'29.03" LT.
D= 3°00'00.00"
T= 102.73'
L= 205.27'
R= 1909.86'
LC= 205.170'
C= S87°27'50.88"E

Curve No. A022-1
P.I. Sta. 402+36.54
N: 143144.6217
E: 2148241.7040
Δ= 13°50'30.97" LT.
D= 30°58'44.63"
T= 22.45'
L= 44.68'
R= 184.95'
LC= 44.573'
C= S77°27'50.88"E

Curve No. A022-1
P.I. Sta. 402+18.09
N: 142946.6236
E: 2148218.0553
Δ= 13°50'30.97" RT.
D= 30°58'44.63"
T= 22.45'
L= 44.68'
R= 184.95'
LC= 44.573'
C= S77°27'50.88"E

Curve No. A022-1
P.I. Sta. 403+85.80
N: 142986.3566
E: 2148392.3722
Δ= 12°31'55.92" RT.
D= 26°14'09.65"
T= 23.98'
L= 47.77'
R= 218.39'
LC= 47.672'
C= N75°43'22.62"E

Curve No. A022-2
P.I. Sta. 406+04.27
N: 143016.8293
E: 2148608.8973
Δ= 7°28'04.03" RT.
D= 3°00'00.00"
T= 124.64'
L= 248.93'
R= 1909.86'
LC= 248.75'
C= N85°43'22.62"E

Curve No. A003-3
P.I. Sta. 401+62.12
N: 142946.1614
E: 2148169.3099
Δ= 1°56'58.97" RT.
D= 2°00'00.00"
T= 48.75'
L= 97.49'
R= 2864.79'
LC= 97.481'
C= N88°28'55.12"E

BM#21-"X" ON CURB @ P.I. OF W. ENTRANCE TO CAR DEALERSHIP. 157.12' RT. ℄ 240 A034 STA. 402+17.71

BM#22-"X" ON HEADWALL DRAINAGE STRUCTURE 271.68' RT. ℄ 240 A034 STA. 408+36.59

BM#23-"X" ON CURB OF SIDEWALK ON N. SIDE BUILDING. 319.36' RT. ℄ A034A034 STA. 413+98.14

CURVE NO. A022-1

CURVE NO. A022-2

CURVE NO. A023-1

CURVE NO. A023-2

CURVE NO. A003-3

℄ SURVEY A034

℄ A022

℄ A023

℄ A003

N 89° 27' 24.62" E
2016.49

N 89°27'24.62" E
1920.42

N 89°27'29.39" E
2638.20'

N 89°27'59.02" E
528.24'

N 89°27'19.79" E
1087.763'

N 89°27'29.39" E
2639.27'

N 0°32'30.61" W
2639.30'

N 0°25'42.38" W
2639.30'

N 0°21'42.21" W
2639.27'

N 0°32'30.61" W
627.00'

N 0°30'55.31" W
627.00'

S 45°24'47.52" E
141.36'

S 84°23'06.38" E
144.61'

S 0°32'34.18" E
125.00'

S 89°27'24.62" W
1707.25'

S 0°32'30.61" E
95.000'

S 0°32'30.61" E
120.000'

S 0°32'30.61" E
140.00'

S 0°32'30.61" E
140.00'

N 44°41'40.45" E
35.393'

S 70°32'35.38" E
11.34'

N 69°27'24.62" E
11.34'

N 81°59'20.62" E
70.04'

S 0°32'30.61" E
100.000'

N 0°32'30.61" W
100.000'

S 0°32'30.61" E
100.000'

N 0°32'30.61" W
95.56'

N 0°32'30.61" W
147.013'

S 0°32'30.61" E
147.013'

N 0°32'30.61" W
140.00'

S 0°32'30.61" E
140.00'

N 0°32'30.61" W
175.00'

S 0°32'30.61" E
175.00'

N 0°32'30.61" W
150.00'

S 0°32'30.61" E
150.00'

N 0°32'30.61" W
87.50'

S 0°32'30.61" E
87.50'

N 0°32'30.61" W
438.587'

S 0°32'30.61" E
438.587

SEC.27, T-11-N, R-3-W

SEC.26, T-11-N, R-3-W

SEC.34, T-11-N, R-3-W

SEC.35, T-11-N, R-3-W

SEARS TERR.

13

PRES.R/W

L=889.315'
LC=87°31'14"
R=1,142.390'
C=S70°27'33"W

8226

Curve No.A005-1
P.I. Sta. A 421+82.51
N: 143166.9547
E: 2150196.4186
Δ= 20°40'47.97" LT.
D= 15°59'59.78"
T= 65.34'
L= 129.25'
R= 358.10'
LC= 128.55'
C= N67°7'1.29"E

CURVE NO. A005-1A
P.I. STA. A 420+67.31
N: 143141.8263
E: 2150083.5366
Δ= 12°01'24.23" LT.
Ts= 150.29'
Sc= 231.99

BM#6- "D" ON TOP E. SIDE OF CONCRETE DRAINAGE DITCH
406.13' LT. ℄ A034
A034 STA. 418+82.24

50305

BM#6
BEG. ℄ A005
T.S. STA.A 419+66.88 ℄ A005
•STA.419+66.88 FAP I-38(14)
X-2,149,983.1129 Y-143,140.8879

P.O.T. STA.A 420+19.84 ℄ A001
X-2,150,025.2720 Y-143,190.0877

+55.85
483.24'

420

S.C. STA.A 421+17.17 ℄ A005
X-2,150,132.6419 Y-143,152.7655

C.S. STA.A 422+46.42 ℄ A005
X-2,150,251.0751 Y-143,202.7522

P.T. STA.A 422+99.09 ℄ A001
X-2,150,276.0760 Y-143,304.9437

S.T. STA.A 423+96.72 ℄ A005
X-2,150,363.8955 Y-143,301.6035

3020
CC BL ASHBY TERR.

CURVE NO. A001-4
P.I. STA. A 421+66.99
N: 143200.4825
E: 2150172.4244
Δ= 44°40'47.38" LT.
D= 15°59'59.78"
T= 147.16'
L= 279.25'
R= 358.10'
LC= 272.2260'
C= N67°7'01.3105"E

CURVE NO. A005-1B
P.I. STA. A 422+96.73
N: 143230.3049
E: 2150293.1685
Δ= 12°01'24.22" LT.
St= 150.29'
Cs= 231.99

6558
6688
6687
6686
6685
6470

℄ A001
℄ A005
CURVE NO. A001-4
CURVE NO. A005-1B
CURVE NO. A005-1
℄ A005 CURVE NO. A005-1A

420

85

P.O.T. STA. 85+00.00 ℄ A035 SURVEY
X-2,150,821.5375 Y-143,519.2099

1361

SCALE:
1" = 50'

℄ SURVEY A035
N 0°20'39.33" W

POE & ASSOCIATES OKLAHOMA CITY, OK

S 45°25'10.0" E
183.260'

*4 REBAR

N 0°20'38.20" W
2641.746'

99.998'

3036
CC E RR ROW

100.000'

N-S SEC. LINE
NS309

P.I. STA.A 429+11.77 ℄ A034 SURVEY
& E-W SEC. LINE 17.17'4" N. TO SEC. COR.
2658.920' N. TO 1/4 SEC. COR. 2621.315'
S. TO 1/4 SEC. COR. Δ=0°00'00.14" LT.
X-2,150,921.8313 Y-142,900.053

N20°10'57.85" E
299.999'

N24°39'23.52" E
230.000'

+79.43
585.31'

425

430

416+00

N 89° 27' 24.62" E
2016.49

1234

℄ SURVEY A034

CURVE 1

P.O.T. STA. 425+09.86
X-2,150,524.2414
Y-143,046.6284

P.I. STA.A 428+14.28 ℄ A034 SURVEY
• P.O.T. STA. 79+77.15 ℄ A035 SURVEY
& E-W SEC. LINE 97.000' E. TO SEC. COR.
2,745.363' E. TO 1/4 SEC. COR. Δ= 0°00'00.14" RT.
W. TO 1/4 SEC. COR.
X-2,150,824.6854 Y-142,996.3594
P.O.T. STA. ℄ 428+14.28
428+14.27 FAP I-38(41)

1237

CALCULATED POINT

S 80°30'05.40" E
304.62

CALCULATED POINT

80

1084
1106

P.O.T. STA. 79+77.15 ℄ A035 SURVEY
- P.I. STA.A 428+14.28 ℄ A034 SURVEY
& E-W SEC. LINE 97.000' E. TO SEC. COR.
2,745.363' E. TO 1/4 SEC. COR. 2,541.720
W. TO 1/4 SEC. COR.
X-2,150,824.6854 Y-142,996.3594

P.I. STA. A 79+79.44 ℄ A035 SURVEY
Δ= 0°09'33.96" RT.
X-2,150,824.6653 Y-142,998.6493

1103
1227

S 80°30'05.26" E
314.08

CALCULATED POINT

S 80°30'05.40" E
300.000'

100.000'

100.013'

*4 REBAR

431+00

℄ SURVEY A035
N 0°30'05.37" W

CALCULATED POINT

P.O.T. STA. 75+00.00 ℄ A035 SURVEY
X-2,150,824.6653 Y-142,998.6493

6671

75

1234

℄ A007

6658

+00.00
130.00'

160.00'

180.17'

CURVE NO. A007-7B

6659

+15.70

104.00'

CURVE NO. A007-7

CURVE NO. A007-7A

N 89°27'29.39 E
2,638.720'

6660

E-W SEC. LINE
EW112

CURVE I
℄ EXIST. A034 SURVEY
P.I. STA.A 422+59.2614
X-2,150,276.0058
Y-143,088.1621
Δ-10°02'30.00" Rt.
D- 2°00'00.00"
R=2,864.789'
T= 251.886'
L= 502.083'
C= S85°31'20.38"E
LC= 501.441'

*4 REBAR

53.90

275.97'

S9°29'50.35"W
94.999'

125.00'

6473

℄ A003

8337

5280

5259

PRES.R/W

96.00'

30'

17' U/E

8360

20' U/E

5264

104.00'

18.96'

5273

S 84°32'30.61" E
11.77'

5243

5244

5248

R=310.00'
L=251.886'
C=S66°39'56.74"E
LC=245.02'

5249

5275

5276

CURVE NO. A007-7B
P.I. STA. 83+70.09
N: 143029.9289
E: 2149986.5130
Δ= 12°01'24.49" LT.
St= 150.29'
Cs= 231.99

TRACT 60
STATE OF OKLAHOMA

℄

N 0°30'2.50" W
627.00'

END. ℄ A007
ST. STA.84+70.07 ℄ A007 55.50'LT
•STA.418+60.80 FAP I-38(14)
X-2,149,886.0896 Y-143,028.9631

P.C. STA.A 419+18.11 ℄ A003
X-2,149,925.2286 Y-142,962.8080

C.S. STA.83+19.78 ℄ A007
X-2,150,035.8169 Y-143,019.9226

S.C. STA.81+75.88 ℄ A007
X-2,150,067.5044 Y-142,964.3351

P.C. STA.A 420+07.57
X-2,150,024.3309
Y-143,085.7762

N 0°30'55.31" W
10' SS EASEMENT

578.04'

6670
6576

5183

77+24.32
657.17' TO A035

5289

S 43°39'55.50" E
260.02'

10' U/E

℄ A007

*4 REBAR

462.32
S43°12'41.01"E

537.99
S44°48'13.83"E

P.T. STA.A 422+10.97 ℄ A003
X-2,150,187.5772 Y-142,852.0661

T.S. STA.80+25.58 ℄ A007
X-2,150,278.4216 Y-142,863.3533

CURVE NO. A007-7A
P.I. STA. 81+26.01
N: 142935.9859
E: 2150209.0654
Δ= 12°01'24.49" LT.
Ts= 150.29'
Sc= 231.99

5245
5301

S 44°10'41.01" E
87.245'

5281

S 65°39'12.05" E
75.128'

5282

℄ A003

℄ N 0°30'2.50" W
302.450'

CURVE NO. A007-7
P.I. STA. 82+48.81
N: 143005.5397
E: 2150107.3216
Δ= 23°01'29.16" LT.
D= 15°59'59.78"
T= 72.94'
L= 143.91'
R= 358.10'
LC= 142.9390
C= N67°6'52.55"W

50332

BM#24

Curve No.A003-4
P.I. Sta. A 420+73.29
N: 142964.2786
E: 2150080.3967
Δ= 46°51'25.05" RT.
D= 15°59'59.78"
T= 155.18'
L= 292.86'
R= 358.10'
LC= 284.7640'
C= S67°6'52.38"E

3004
CC R/W

BM#24-"X" ON BASE OF LIGHT POLE
E. SIDE OF PARKING LOT.
439.75' RT. ℄ A034
A034 STA. 416+99.26

SDS 29 OF 46

PLS			POE & ASSOCIATES, OKLAHOMA CITY, OK SURVEY DIVISION
DRAWN			SURVEY DATA SHEET
CHECKED			
APPROVED			
CREW	POE		SWO 2923(11) PROJECT NO. 0903217.1 SHEET NO. SD29

OKLAHOMA COUNTY

POE & ASSOCIATES OKLAHOMA CITY, OK

SEC. 26, T-11-N, R-3-W

BM#54 - "X" ON TOP OF CURB IN E. PARKING LOT OF TEXAS ROADHOUSE 209.30' RT. ℄ A034 A034 STA. 439+22.55

BM#53-BAR & CAP (CONTROL POINT "O-55-1841") 286.71' LT. ℄ A034 A034 STA. 444+45.20

BM#52 - "X" ON TOP OF CURB S. OF LIGHT POLE S.E. OF THEATRE 308.74' RT. ℄ A034 A034 STA. 445+56.60

BM#56- "X" ON TOP OF CURB S.E. PARKING LOT OF TIRE REPAIR 541.94' RT. ℄ A034 A034 STA. 433+59.70

BM#57- "T" ON TOP CONCRETE HEADWALL. 490.12' LT. ℄ A034 A034 STA. 431+23.73= 388.69' RT. ℄ A035 STA. 84+07.16

BM#38- #6 REBAR 6' W. OF O.G.&E. FENCE, 3RD LIGHT POLE FROM N. 954.34' RT. ℄ A035 A035 STA. 71+85.21= 693.64' RT. ℄ A034 STA. 437+77.03

CURVE 2
℄ EXIST. A034 SURVEY
P.I. STA. A 433+76.68
X=2,151,379.3795
Y=142,903.5503
Δ=9°54'29.99" LT.
D=2°00'00.00"
R=2,864.789'
T=248.327'
L=495.411'
C=S85°27'20.36"E
LC=494.80'

SCALE: 1" = 50'

Curve No. A006-1
P.I. Sta. 81+50.98
N: 142984.6150
E: 2151562.6074
Δ= 20°59'25.39" RT.
D= 15°59'59.78"
T= 66.34'
L= 131.19'
R= 358.10'
LC= 130.46'
C= N67°54'53.07"W

Curve No. A006-1A
P.I. STA. 80+34.78
N: 142961.1659
E: 2151676.8741
Δ= 12°01'24.49" RT.
Tx= 150.29'
Sc= 231.99

Curve No. A006-1B
P.I. STA. 82+66.14
N: 143047.4163
E: 2151464.3082
Δ= 12°01'24.49" RT.
St= 150.29'
Cs= 231.99

CURVE NO. A002-1
P.I. STA. 77+72.82
N: 143027.0285
E: 2151585.5593
Δ= 44°59'20.18" RT.
D= 15°59'59.78"
T= 148.29'
L= 281.18'
R= 358.10'
LC= 274.014'
C= S67°54'54.87"E

CURVE NO. A009-1
P.I. STA. A 441+22.91
N: 143015.0277
E: 2152126.0592
Δ= 12°56'24.70" LT.
D= 5°59'59.99"
T= 108.30'
L= 215.67'
R= 954.93'
LC= 215.2119'
C= N83°07'12.9517"E

CURVE NO. A008-3
P.I. STA. 80+43.81
N: 142848.5942
E: 2151455.4703
Δ= 43°03'00.76" RT.
D= 7°30'00.13"
T= 301.31'
L= 574.00'
R= 763.94'
LC= 560.59'
C= N68°3'54.978"E

CURVE NO. A004-4
P.I. STA. A 458+90.06
N: 142773.9006
E: 2151428.9884
Δ= 43°02'58.73" RT.
D= 12°29'59.63"
T= 180.79'
L= 344.40'
R= 458.37'
LC= 336.3558'
C= N68°3'53.9637"E

PC. STA. A 457+09.27 ℄ A004
X=2,151,297.7635 Y=142,649.5476

SEC. 35, T-11-N, R-3-W

PLS			POE & ASSOCIATES, OKLAHOMA CITY, OK SURVEY DIVISION
DRAWN			SURVEY DATA SHEET
CHECKED			
APPROVED			
CREW	POE		SWO 29231(1) PROJECT NO. 09032(17) SHEET NO. 5032

SDS 30 OF 46

OKLAHOMA COUNTY

POE & ASSOCIATES, OKLAHOMA CITY, OK

SEC. 26, T-11-N, R-3-W

BM#46 - "X" ON CURB @ S.W. COR. PARKING LOT. 317.36' LT. ℄ A034 A034 STA. 453+12.44

BM#39- "X" ON W. CURB EAST OF LIGHT POLE @ O.G.&E. MAIN PARKING LOT. 262.04' RT. ℄ A034 A034 STA. 446+16.87

BM#40- "T" ON CONCRETE FOOTING OF N.E. FENCE CORNER OF O.G.&E. YARD. 606.19' RT. ℄ A034 A034 STA. 455+69.01

BM#42- #6 REBAR @ N.W. FENCE CORNER OF BUDWIESER PROPERTY 196.39' RT. ℄ A034 A034 STA. 460+94.99

BM#37 - "T" ON CONCRETE FOOTING OF N.N.E. FENCE OF O.G.&E. YARD. 326.25' RT. ℄ A034 A034 STA. 450+89.25

SCALE: 1" = 50'

CURVE NO. A009-2
P.I. STA. A 450+97.27
N: 143240.2178
E: 2153074.9930
Δ= 29°45'21.94" RT.
D= 4°00'00.05"
T= 380.54'
L= 743.90'
R= 1432.39'
LC= 735.5681'
C= S88°28'18.4322"E

CURVE NO. A024-1
P.I. STA. A 459+07.74
N: 142977.1456
E: 2153911.2149
Δ=163°11'09.67" LT.
D= 76°23'39.74"
T= 507.47'
L= 213.61'
R= 75.00'
LC= 148.39'
C= S7°59'56.4351"W

CURVE NO. A009-3
P.I. STA. A 459+09.33
N: 143006.0015
E: 2153870.4757
Δ= 16°48'58.04" LT.
D= 7°00'00.03"
T= 120.98'
L= 240.23'
R= 818.51'
LC= 239.3687'
C= S82°0'06.378"E

CURVE NO. A015-1
P.I. STA. 20576+48.20
N: 144093.4798
E: 2153994.2466
Δ= 26°47'49.38" LT.
D= 1°00'00.00"
T= 1364.82'
L= 2679.70'
R= 5729.58'
LC= 2655.35'
C= S13°5'28.2417"E

CURVE NO. A004-5
P.I. STA. A 472+93.36
N: 142784.0622
E: 2152849.4253
Δ= 29°59'59.58" RT.
D= 4°59'59.93"
T= 307.05'
L= 600.00'
R= 1145.92'
LC= 593.1696'
C= S75°24'35.6078"E

CURVE NO. A025-1
P.I. STA. A 457+45.46
N: 142865.0042
E: 2153749.7368
Δ=134°03'43.01" RT.
D= 25°27'53.25"
T= 530.86'
L= 526.46'
R= 225.00'
LC= 414.32'
C= S23°22'43.9171"E

SEC. 35, T-11-N, R-3-W

SDS 31 OF 46

PLS		
DRAWN		
CHECKED		
APPROVED		
CREW	POE	

POE & ASSOCIATES, OKLAHOMA CITY, OK
SURVEY DIVISION

SURVEY DATA SHEET

SWO 2923(1) PROJECT NO. 03032(17) SHEET NO. SD31

OKLAHOMA COUNTY

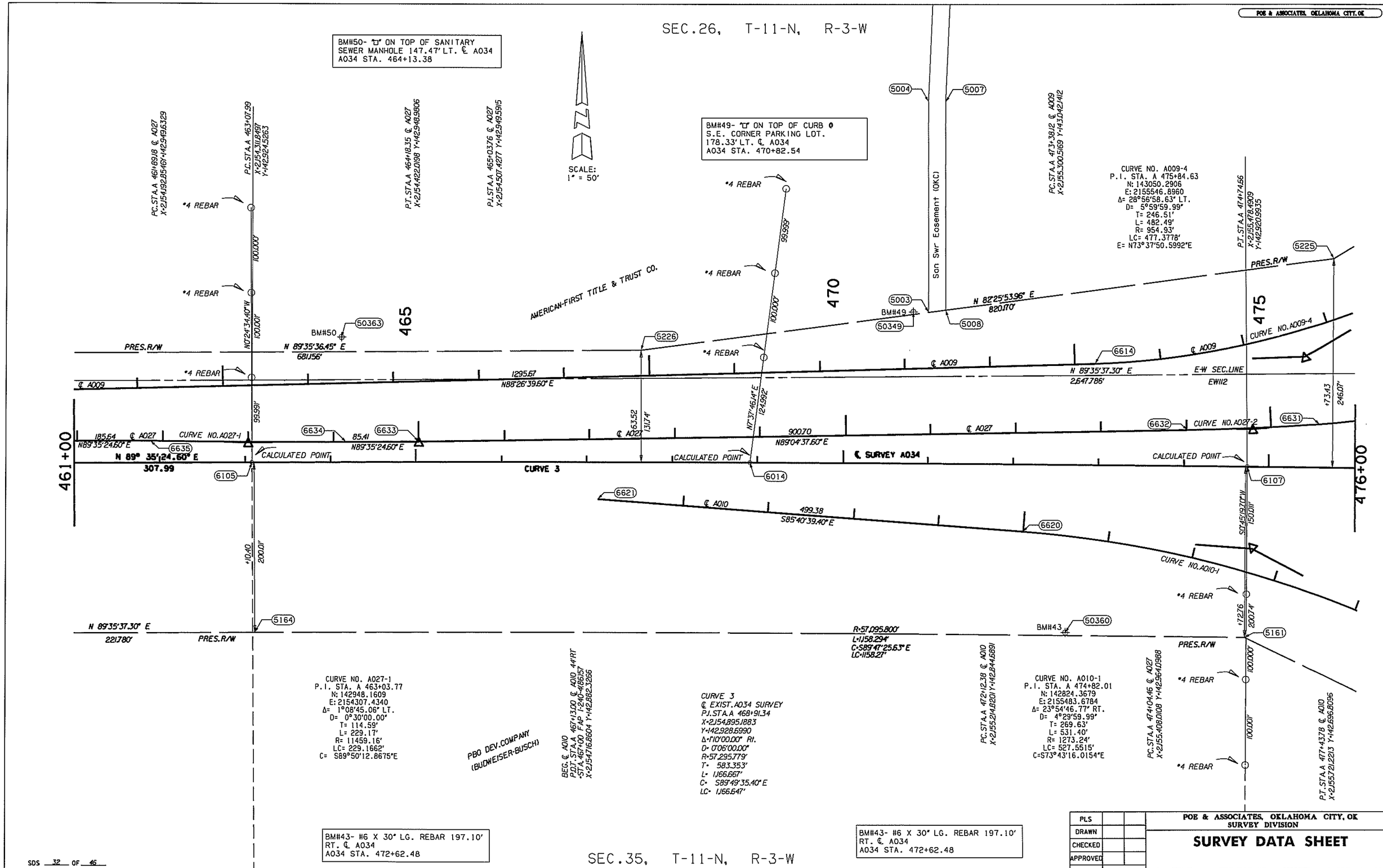

POE & ASSOCIATES, OKLAHOMA CITY, OK
SEC.26, T-11-N, R-3-W
BM#50- "□" ON TOP OF SANITARY SEWER MANHOLE 147.47' LT. ℄ A034 A034 STA. 464+13.38
BM#49- "□" ON TOP OF CURB @ S.E. CORNER PARKING LOT. 178.33' LT. ℄ A034 A034 STA. 470+82.54
SCALE: 1" = 50'
San Swr Easement (OKC)
AMERICAN-FIRST TITLE & TRUST CO.
CURVE NO. A009-4
P.I. STA. A 475+84.63
N: 143050.2906
E: 2155546.8960
Δ= 28°56'58.63" LT.
D= 5°59'59.99"
T= 246.51'
L= 482.49'
R= 954.93'
LC= 477.3778'
E= N73°37'50.5992"E
PRES.R/W
℄ A009
℄ A027
℄ A010
℄ SURVEY A034
CURVE NO. A027-1
CURVE NO. A027-2
CURVE NO. A010-1
CURVE 3
CALCULATED POINT
E-W SEC.LINE
EW112
N 89° 35'24.60" E
307.99
N 89°35'37.30" E
221.780'
N 89°35'36.45" E
681.156'
N 82°25'53.96" E
820.170'
N 89°35'37.30" E
2,647.786'
N 89°04'37.60" E
S85°40'39.40" E
499.38
N0°24'34.40"W
100.000'
99.991'
99.999'
N7°37'46.14"E
124.992'
S0°45'19.70"W
150.011'
+10.40
200.01'
+73.43
246.07'
+72.76
200.74'
100.000'
100.001'
461+00
465
470
475
476+00
BM#50
BM#49
BM#43
50363
50349
50360
5004
5007
5003
5008
5225
5226
6614
6635
6634
6633
6632
6631
6105
6014
6107
6621
6620
5164
5161
CURVE NO. A027-1
P.I. STA. A 463+03.77
N: 142948.1609
E: 2154307.4340
Δ= 1°08'45.06" LT.
D= 0°30'00.00"
T= 114.59'
L= 229.17'
R= 11459.16'
LC= 229.1662'
C= S89°50'12.8675"E
PBO DEV.COMPANY (BUDWEISER-BUSCH)
CURVE 3
℄ EXIST. A034 SURVEY
P.I. STA. A 468+91.34
X=2,154,895.1883
Y=142,928.6990
Δ=1°10'00.00" Rt.
D= 0°06'00.00"
R=57,295.779'
T= 583.353'
L= 1,166.667'
C= S89°49'35.40"E
LC= 1,166.647'
R=57,095.800'
L=1,158.294'
C=S89°47'25.63"E
LC=1158.27'
CURVE NO. A010-1
P.I. STA. A 474+82.01
N: 142824.3679
E: 2155483.6784
Δ= 23°54'46.77" RT.
D= 4°29'59.99"
T= 269.63'
L= 531.40'
R= 1273.24'
LC= 527.5515'
C=S73°43'16.0154"E
BM#43- #6 X 30" LG. REBAR 197.10' RT. ℄ A034 A034 STA. 472+62.48
BM#43- #6 X 30" LG. REBAR 197.10' RT. ℄ A034 A034 STA. 472+62.48
SEC.35, T-11-N, R-3-W
SDS 32 OF 46
PLS
DRAWN
CHECKED
APPROVED
CREW
POE
POE & ASSOCIATES, OKLAHOMA CITY, OK
SURVEY DIVISION
SURVEY DATA SHEET
SWO 2923(1)
PROJECT NO. 09032(17)
SHEET NO. SD32
OKLAHOMA COUNTY

POE & ASSOCIATES, OKLAHOMA CITY, OK

SEC.26, T-11-N, R-3-W

SEC.25, T-11-N, R-3-W

SEC.35, T-11-N, R-3-W

SEC.36, T-11-N, R-3-W

N-S SEC.LINE N5310

E-W SEC.LINE EW112

BM#48- "X" ON SIGN BASE
WEST OF EASTERN AVE.
312.21' LT. ℄ A034
A034 STA. 478+91.48

BM#44- #6 X 30" LG.
REBAR 372.48' RT. ℄ A034
A034 STA. 478+44.22

BM#45- "X" ON HEADWALL
W. SIDE OF EASTERN AVE.
511.12' RT. ℄ A034
A034 STA. 481+79.75

CURVE NO. A009-4
P.I. STA. A 475+84.63
N: 143050.2906
E: 2155546.8960
Δ= 28°56'58.63" LT.
D= 5°59'59.99"
T= 246.51'
L= 482.49'
R= 954.93'
LC= 477.3778'
E= N73°37'50.5992"E

CURVE NO. A009-5
P.I. STA. A 480+67.13
N: 143303.0677
E: 2155970.1926
Δ= 28°56'58.62" RT.
D= 5°59'59.99"
T= 246.51'
L= 482.49'
R= 954.93'
LC= 477.3777
C= N73°37'50.6008"

CURVE NO. A009-6
P.I. STA. A 485+42.11
N: 143308.0905
E: 2156455.5543
Δ= 28°06'10.97" RT.
D= 5°59'59.99"
T= 239.00'
L= 468.38'
R= 954.93'
LC= 463.7032'
C= S75°11'56.0828"E

CURVE NO. A009-7
P.I. STA. A 490+10.49
N: 143075.1276
E: 2156872.9406
Δ= 28°06'10.97" LT.
D= 5°59'59.99"
T= 239.00'
L= 468.38'
R= 954.93'
LC= 463.7032'
C= S74°34'5.7172"E

CURVE NO. A010-1
P.I. STA. A 474+82.01
N: 142824.3679
E: 2155483.6784
Δ= 23°54'46.77" RT.
D= 4°29'59.99"
T= 269.63'
L= 531.40'
R= 1273.24'
LC= 527.5515'
C=S73°43'16.0154"E

CURVE NO. A010-2
P.I. STA. A 481+37.37
N: 142510.6015
E: 2156067.9828
Δ= 28°28'12.98" LT.
D= 9°32'57.47"
T= 152.21'
L= 298.14'
R= 600.00'
LC= 295.0822'
C= S75°59'58.9089"E

CURVE NO. A010-3
P.I. STA. A 484+57.61
N: 142511.9399
E: 2156394.5045
Δ= 32°23'55.87" LT.
D= 9°32'57.47"
T= 174.31'
L= 339.28'
R= 600.00'
LC= 334.1004'
C= N73°33'56.5362"E

CURVE NO. A010-4
P.I. STA. A 490+18.84
N: 142819.6299
E: 2156875.0027
Δ= 29°08'38.00" RT.
D= 7°59'59.89"
T= 186.18'
L= 364.30'
R= 716.20'
LC= 360.3853'
C= N71°56'17.5981"E

CURVE NO. A010-5
P.I. STA. A 492+74.51
N: 142835.6839
E: 2157138.2442
Δ= 3°06'04.32" RT.
D= 2°00'00.00"
T= 77.55'
L= 155.06'
R= 2864.79'
LC= 155.0411'
C= N88°03'37.758"E

CURVE NO. A027-3
P.I. STA. A 476+36.85
N: 142976.2166
E: 2155640.0452
Δ= 12°19'29.11" LT.
D= 7°59'59.89"
T= 77.33'
L= 154.06'
R= 716.20'
LC= 153.7631'
C= N79°48'48.1546"E

CURVE NO. A027-4
P.I. STA. A 479+67.58
N: 143069.4790
E: 2155957.9775
Δ= 73°52'29.62" LT.
D= 45°50'11.84"
T= 93.98'
L= 161.17'
R= 125.00'
LC= 150.2357'
C= N36°42'54.3953"E

SURVEY DATA SHEET

PLS			POE & ASSOCIATES, OKLAHOMA CITY, OK SURVEY DIVISION
DRAWN			
CHECKED			
APPROVED			
CREW	POE		SWO 292311 PROJECT NO. 02031811 SHEET NO. 5033

OKLAHOMA COUNTY

SOS 33 OF 46

POE & ASSOCIATES, OKLAHOMA CITY, OK

SCALE:
1" = 50'

BEG.℄ A016
T.S.STA.80+51.88 ℄ A016 41.24'LT.
•TS STA.89+18.19 FAP I-38I(4)
X•2,150,635.8849 Y•143,069.7619

S.C.STA.82+02.58 ℄ A016
X•2,150,495.5564 Y•143,119.4141

C.S.STA.86+86.72 ℄ A016
X•2,150,705.4157 Y•143,298.5751

END.℄ A016
S.T.STA.88+36.55 ℄ A016
•ST STA.81+33.66 FAP I-38I(4)
X•2,150,733.8074 Y•143,153.4000

CURVE NO. A016-1B
P.I. STA. 87+38.07
N: 143254.8219
E: 2150732.2986
Δ= 30°42'54.74" RT.
St= 149.83'
Cs= 144.70

℄ A016
CURVE NO.A016-1
CURVE NO.A016-1B
6643
6642
6644
6645
CURVE NO.A016-1A

Curve No. A016-1
Δ= 198°29'56.22" RT.
D= 40°59'59.79"
T= -1.00'
L= 484.14'
R= 139.75'
LC= 275.86'
C= N 49°29'54.53" E

P.T.STA.A 425+09.66
X•2,150,522.2414
Y• 143,046.8284

425

CURVE NO. A016-1A
P.I. STA. 81+53.92
N: 143086.1216
E: 2150535.1661
Δ= 30°53'34.35" RT.
Ts= 150.70'
Sc= 145.12

421+00

CURVE 1
℄ SURVEY A034

℄ SURVEY A034

1237

85

80

S 80°30'05.40" E
304.62

1084

S 80°30'05.26" E
314.08

1103

1227

℄ SURVEY A035

N 0°20'39.33" W
520.57

1361

P.O.T. STA.85+00.00 ℄ A035 SURVEY
X•2,150,821.5375 Y•143,519.2099

BEG.℄ A017
T.S.STA.80+53.38 ℄ A017
FAP I-38I(4)
X•2,150,911.5169 Y•143,073.1298

S.C.STA.82+03.59 ℄ A017
X•2,150,937.9175 Y•143,219.4020

C.S.STA.87+36.52 ℄ A017
X•2,151,109.2306 Y•143,018.7604

END.℄ A017
S.T.STA.88+85.89 ℄ A017 43'LT
•ST STA.88+84.36 FAP I-38I(4)
X•2,150,961.8249 Y•143,016.5705

CURVE NO. A017-1A
P.I. STA. 81+55.08
N: 143174.8210
E: 2150912.1527
Δ= 30°47'36.96" RT.
Ts= 150.21'
Sc= 144.88

℄ A017
CURVE NO.A017-1
CURVE NO.A017-1B
6647
6646
6649
6648

P.I.STA.A 428+14.28 ℄ A034 SURVEY
• P.O.T. STA.79+77.15 ℄ A035 SURVEY
& E-W SEC.LINE 97.000' E.TO SEC.COR.
2,745.363' E.TO 1/4 SEC.COR. 2,541.720
W.TO 1/4 SEC.COR. • Δ0°00'00.14" Rt.
X•2,150,824.6854 Y•142,996.3594
P.O.T. STA.℄ 428+14.28
428+14.27 FAP I-38I(4)

P.I.STA.A 429+12.77 ℄ A034 SURVEY
& E-W SEC.LINE 17.174' N.TO SEC.COR.
2,658.920' N.TO 1/4 SEC.COR. 2,621.319'
S.TO 1/4 SEC.COR. Δ0°00'00.14" Lt.
X•2,150,921.8313 Y•142,980.1033

430

Curve No. A017-1
Δ= 218°29'52.52" RT.
D= 40°59'59.79"
T= -1.00'
L= 532.92'
R= 139.75'
LC= 263.87'
C= S 40°30'05.27" E

CURVE NO. A017-1B
P.I. STA. 87+87.70
N: 143000.1760
E: 2151061.5983
Δ= 30°37'14.80" RT.
St= 149.37'
Cs= 144.48

P.C.STA.A 431+28.35
X•2,151,134.5663
Y• 142,944.5298

℄ SURVEY A034

CURVE 2

436+00

435

85

6656
6657
CURVE NO.A018-1B
℄ A018

CURVE NO. A018-1B
P.I. STA. 86+36.07
N: 142993.4835
E: 2150587.3819
Δ= 30°44'58.69" RT.
St= 150.00'
Cs= 144.78

P.O.T.STA.79+77.15 ℄ A035 SURVEY
•79+75.83 FAP I-38I(4)
P.I.STA.79+79.44 ℄ A035 SURVEY
Δ• 0°09'33.96" Rt.
X•2,150,824.6653 Y•142,998.6493

P.O.T.STA.79+77.15 ℄ A035 SURVEY
• P.I.STA.A 428+14.28 ℄ A034 SURVEY
& E-W SEC.LINE 97.000' E.TO SEC.COR.
2,745.363' E.TO 1/4 SEC.COR. 2,541.720
W.TO 1/4 SEC.COR.
X•2,150,824.6854 Y•142,996.3594

6654
6655
CURVE NO.A018-1A
CURVE NO.A018-1

CURVE 1
℄ EXIST.A034 SURVEY
P.I.STA.A 422+59.2614
X•2,150,276.0058
Y•143,088.1621
Δ•10°02'30.00" Rt.
D• 2°00'00.00"
R•2,864.789'
T• 251.686'
L• 502.083'
C• S85°31'20.38"E
LC• 501.441'

Curve No. A018-1
Δ= 218°29'52.52" RT.
D= 40°59'59.79"
T= -1.00'
L= 532.92'
R= 139.75'
LC= 263.87'
C= N 40°30'05.27" W

C.S.STA.85+84.66 ℄ A018
X•2,150,539.4644 Y•142,974.8501

S.C.STA.80+51.74 ℄ A018
X•2,150,710.8374 Y•142,774.2084

BEG.℄ A018
T.S.STA.79+01.74 ℄ A018
•TS STA.79+00.42 FAP I-38I(4)
X•2,150,687.5396 Y•142,976.7222

END.℄ A018
S.T.STA.87+34.66 ℄ A018 42'RT
•ST STA.70+67.49 FAP I-38I(4)
X•2,150,735.8489 Y•142,920.1689

CURVE NO. A018-1A
P.I. STA. 80+03.29
N: 142818.6217
E: 2150736.7371
Δ= 30°44'59.37" RT.
Ts= 150.00'
Sc= 144.78

80

N 0°30'05.37" W
479.43

6653
6652
℄ A019
CURVE NO.A019-1B
CURVE NO.A019-1

CURVE NO. A019-1B
P.I. STA. 85+86.51
N: 142736.7179
E: 2150916.7058
Δ= 30°32'24.85" RT.
St= 148.98'
Cs= 144.29

6650
6651
CURVE NO.A019-1B

Curve No. A019-1
Δ= 198°29'56.22" RT.
D= 40°059'59.79"
T= -1.00'
L= 484.14'
R= 139.75'
LC= 275.86'
C= S 49°29'54.53" W

BEG.℄ A019
T.S.STA.79+01.32 ℄ A019 42'LT
•TS STA.78+17.23 FAP I-38I(4)
X•2,151,013.4926 Y•142,922.1852

C.S.STA.85+35.46 ℄ A019
X•2,150,943.1327 Y•142,693.0485

S.C.STA.80+51.32 ℄ A019
X•2,151,152.8920 Y•142,872.2095

END.℄ A019
S.T.STA.86+84.44 ℄ A019
•ST STA.70+33.08 FAP I-38I(4)
X•2,150,915.5789 Y•142,837.5469

CURVE 2
℄ EXIST.A034 SURVEY
P.I.STA.A 433+76.68
X•2,151,379.3795
Y•142,903.5503
Δ•9°54'29.99" Lt.
D• 2°00'00.00"
R•2,864.789'
T• 248.327'
L• 495.417'
C• S85°27'20.36"E
LC• 494.80'

CURVE NO. A019-1A
P.I. STA. 80+02.87
N: 142905.4273
E: 2151113.6508
Δ= 30°44'58.60" RT.
Ts= 150.00'
Sc= 144.78

85

P.O.T.STA.75+00.00 ℄ A035 SURVEY
X•2,150,824.6653 Y•142,998.6493

1355

75

PLS			POE & ASSOCIATES, OKLAHOMA CITY, OK SURVEY DIVISION
DRAWN			SURVEY DATA SHEET
CHECKED			
APPROVED			
CREW	POE		SWO 29231(I) PROJECT NO. 09032I(7) SHEET NO. SD34

SDS 34 OF 46

OKLAHOMA COUNTY

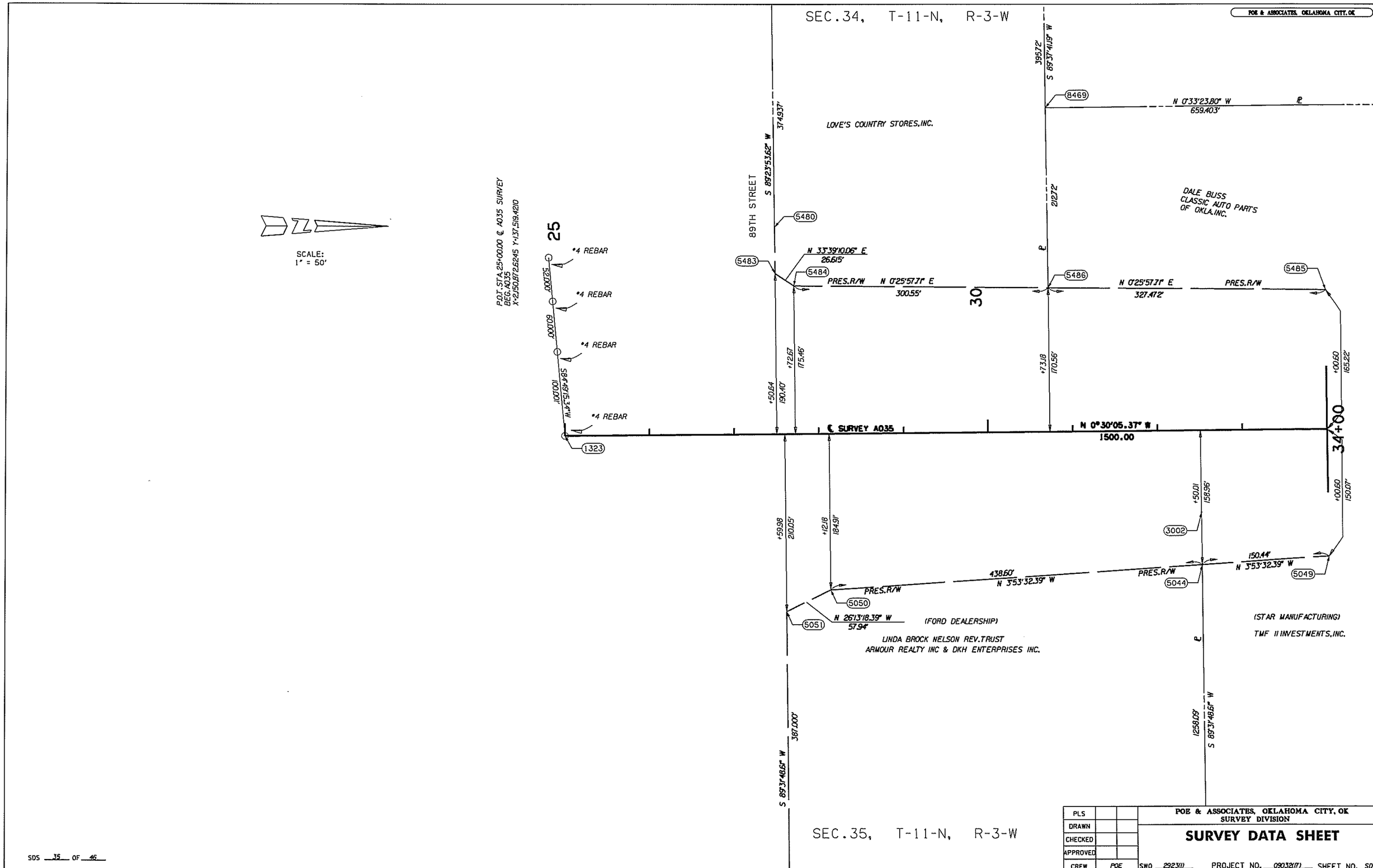

PLS		POE & ASSOCIATES, OKLAHOMA CITY, OK SURVEY DIVISION
DRAWN		**SURVEY DATA SHEET**
CHECKED		
APPROVED		
CREW	POE	SWO 2923(1) PROJECT NO. 09032(17) SHEET NO. SD35

OKLAHOMA COUNTY

SDS 35 OF 46

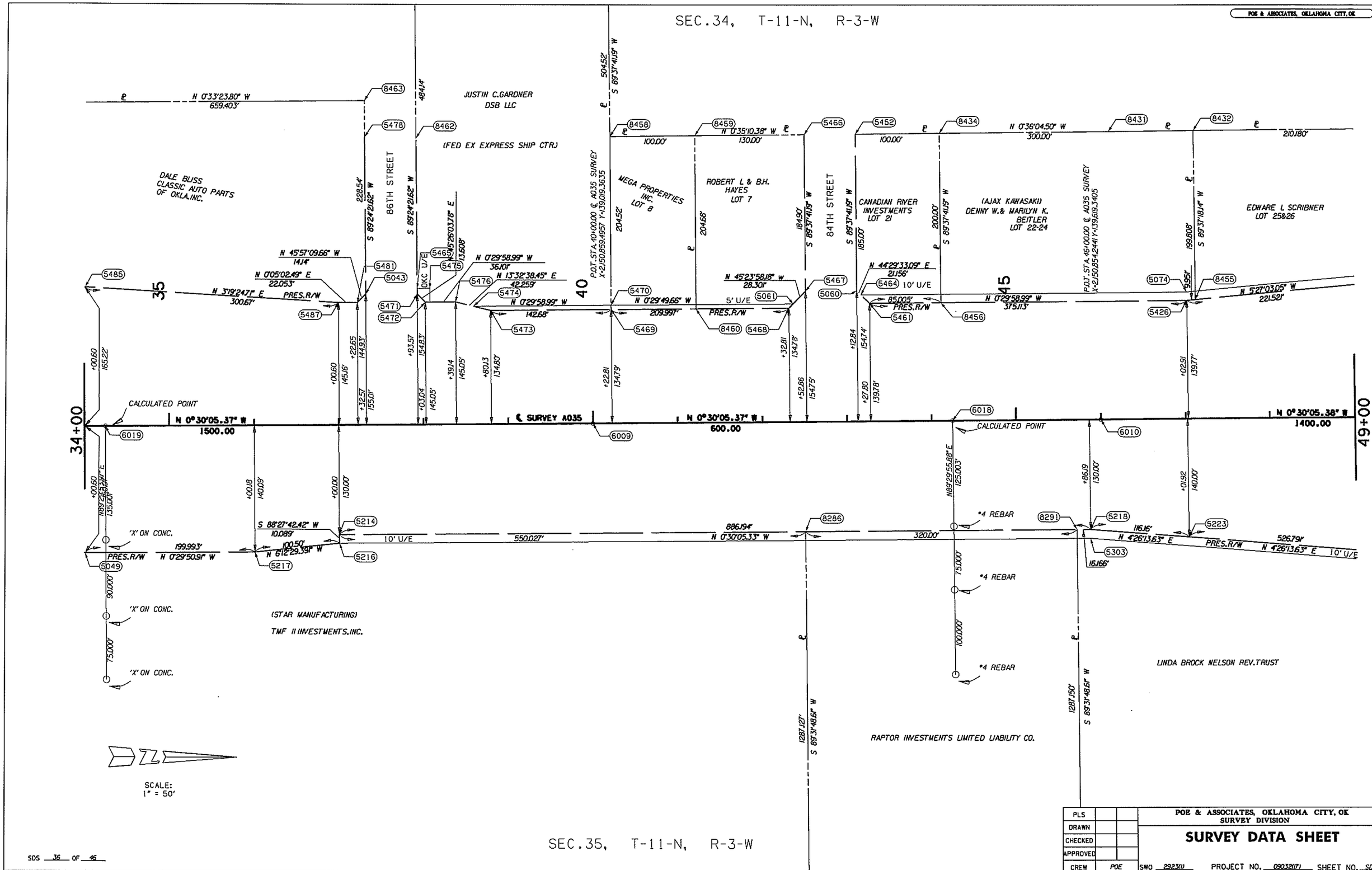

SEC.34, T-11-N, R-3-W
POE & ASSOCIATES, OKLAHOMA CITY, OK
JUSTIN C.GARDNER
DSB LLC
(FED EX EXPRESS SHIP CTR.)
DALE BLISS
CLASSIC AUTO PARTS
OF OKLA.INC.
86TH STREET
MEGA PROPERTIES
INC.
LOT 8
ROBERT L & B.H.
HAYES
LOT 7
84TH STREET
CANADIAN RIVER
INVESTMENTS
LOT 21
(AJAX KAWASAKI)
DENNY W.& MARILYN K.
BEITLER
LOT 22-24
EDWARE L SCRIBNER
LOT 25&26
P.O.T. STA.40+00.00 ℄ A035 SURVEY
X=2,150,859.4957 Y=139,019.3635
P.O.T. STA.46+00.00 ℄ A035 SURVEY
X=2,150,854.2441 Y=139,619.3405
N 0°33'23.80" W
659.403'
N 0°35'10.38" W
130.00'
N 0°36'04.50" W
300.00'
N 45°57'09.66" W
14.14'
N 0°05'02.49" E
22.053'
N 3°19'24.71" E
300.67'
N 0°29'58.99" W
36.101'
N 13°32'38.45" E
42.259'
N 0°29'58.99" W
142.68'
N 0°29'49.66" W
209.997'
N 45°23'58.18" W
28.301'
N 44°29'33.09" E
21.156'
N 0°29'58.99" W
375.113'
N 5°27'03.05" W
221.521'
CALCULATED POINT
N 0°30'05.37" W
1500.00
℄ SURVEY A035
N 0°30'05.37" W
600.00
N 0°30'05.38" W
1400.00
34+00
49+00
35
40
45
'X' ON CONC.
PRES.R/W
N 0°29'50.91" W
199.993'
S 88°27'42.42" W
10.089'
N 6°12'29.39" W
100.50'
10' U/E
550.027'
886.194'
N 0°30'05.33" W
320.00'
N 4°26'13.63" E
526.791'
N 4°26'13.63" E
10' U/E
*4 REBAR
(STAR MANUFACTURING)
TMF II INVESTMENTS,INC.
LINDA BROCK NELSON REV.TRUST
RAPTOR INVESTMENTS LIMITED LIABILITY CO.
S 89°31'48.61" W
1287.127'
1287.150'
SCALE:
1" = 50'
SEC.35, T-11-N, R-3-W
SDS 36 OF 46
PLS
DRAWN
CHECKED
APPROVED
CREW
POE
POE & ASSOCIATES, OKLAHOMA CITY, OK
SURVEY DIVISION
SURVEY DATA SHEET
SWO 2923(1)
PROJECT NO. 09032(17)
SHEET NO. SD36
OKLAHOMA COUNTY

POE & ASSOCIATES, OKLAHOMA CITY, OK

SEC. 34, T-11-N, R-3-W

BM#33- #5 IRON ROD IN MEDIAN OF 82ND ST. (CONTROL PT. "HOSPICE") 629.22' LT ℄ A035 A035 STA. 53+30.60

BM#32-"X" ON CURB P.I. @ S.E COR. OF S. PARKING LOT OF DAYS INN HOTEL 230.16' LT. ℄ A035 A035 STA. 53+66.62

BM#30-"X" ON EAST CURB OF PARKING LOT. 154.01' LT. ℄ A035 A035 STA. 59+00.05

(LA QUINTA) BRE/LO PROPERTIES LLC

ADVANCED INVESTMENTS LLC

W.RAY PELFREY REV.TRUST (DEPT.OF CORRECTIONS)

SAMAY HOTEL ENTERPRISES INC. TRACT 80 (DAYS INN)

(MARSHALL PARK) M.A.& E.K.MARSHALL TRACT 79

82ND STREET

80TH STREET

BEG. ℄ A031 P.O.B. STA. 94+02.99 ℄ A031 •STA. 94+02.99 FAP I-IR-35-3(74)121 X•2,150,347.8788 Y•140,344.3985

P.O.T. STA. 53+38.63 ℄ A035 SURVEY E-W SEC. LINE 97.206' E. TO 1/4 SEC. COR. 2,739.444' E. TO CEN. SEC. 2,545.085' W. TO CEN. SEC. X•2,150,847.7792 Y•140,357.9462 P.I. STA. 99+02.99 ℄ A031 •STA. 99+02.99 FAP I-IR-35-3(74)121 X•2,150,347.8788 Y•140,344.3985

BEG. ℄ A031 P.O.B. STA. 53+38.63 ℄ A035 SURVEY E-W SEC. LINE 97.206' E. TO 1/4 SEC. COR. 2,739.444' E. TO CEN. SEC. 2,545.085' W. TO CEN. SEC. X•2,150,847.7792 Y•140,357.9462 P.I. STA. 99+02.99 ℄ A031 •STA. 99+02.99 FAP I-IR-35-3(74)121 X•2,150,347.8788 Y•140,344.3985

Curve No.A003-8 P.I. Sta. A 448+88.50 N: 140361.4928 E: 2150670.7574 Δ= 11°42'08.01" LT. D= 4°59'59.99" T= 117.43' L= 234.04' R= 1145.92' LC= 233.6380' C= S0°24'24.63"W

CURVE NO. A007-1 P.I. STA. 55+97.56 N: 140611.9701 E: 2150741.0631 Δ= 30°00'00.41" LT. D=229°10'59.22" T= 6.70' L= 13.09' R= 25.00' LC= 12.94' C= N21°15'28.63"E

CURVE NO. A007-2 P.I. STA. 58+07.69 N: 140821.1520 E: 2150764.0016 Δ= 2°36'57.99" LT. D= 4°00'00.00" T= 32.71' L= 65.40' R= 1432.39' LC= 65.40' C= N4°56'59.63"E

Curve NO. A003-7 P.I. Sta. A 444+21.61 N: 140825.8581 E: 2150721.6789 Δ= 6°45'33.99" RT. D= 3°00'00.00" T= 112.79' L= 225.31' R= 1909.86' LC= 225.1840' C= S2°52'41.6019"W

CURVE NO. A007-3 P.I. STA. 63+08.98 N: 141321.4423 E: 2150795.8440 Δ= 4°08'36.00" LT. D= 3°00'00.00" T= 69.09' L= 138.11' R= 1909.86' LC= 138.08' C= N1°34'12.63"E

CURVE NO. A003-3 P.I. STA. 55+77.56 ℄ A007 X•2,150,683.5580 Y•140,478.2238

CURVE NO. A003-7 P.I. STA. 56+03.95 ℄ A007 X•2,150,737.1013 Y•140,686.5685

CURVE NO. A003-8 P.I. STA. 55+90.86 ℄ A007 X•2,150,737.1013 Y•140,686.5685

CURVE NO. A003-7 P.I. STA. 56+03.95 ℄ A007 X•2,150,741.7933 Y•140,618.6290

CURVE NO. A003-8 P.I. STA. 55+82.58 FAP I-38(14) X•2,150,729.2354 Y•140,595.8439

P.T. STA. A 445+34.14 ℄ A003 X•2,150,709.3845 Y•140,713.7420

P.C. STA. 57+14.98 ℄ A007 X•2,150,760.4364 Y•140,788.6398

P.T. STA. 58+40.38 ℄ A007 X•2,150,766.0791 Y•140,853.7929

P.C. STA. A 443+08.82 ℄ A003 X•2,150,720.6918 Y•140,936.6419

P.O.T. STA. 60+00.00 ℄ A035 SURVEY X•2,150,841.3904 Y•141,019.2910

P.C. STA. 62+39.89 ℄ A007 X•2,150,791.4558 Y•141,252.4962

P.T. STA. 63+78.00 ℄ A007 X•2,150,795.2394 Y•141,390.5253

P.I. STA. 63+87.39 ℄ A007 X•2,150,795.1572 Y•141,399.9150

P.C. STA. 62+00.00 ℄ A028 X•2,150,936.7789 Y•141,288.2754

BEG. ℄ A004 P.O.B. STA. A 432+87.86 ℄ A004 •STA. 53+73.24 FAP I-240-4186(87) X•2,151,008.0977 Y•140,350.6568

BEG. ℄ A008 P.O.B. STA. 57+10.31 ℄ A008 •STA. 57+00 FAP I-240(86)87 X•2,150,888.1031 Y•140,720.9889

P.I. STA. 15+00.00 ℄ A031 X•2,150,847.8553 Y•140,349.2465

P.I. STA. 100+00.20 ℄ A031 X•2,150,945.0567 Y•140,350.1890

END. ℄ A003 P.O.T. STA. 450+05.11 ℄ A003 •P.C. STA. 52+21.61 FAP I-38(14) X•2,150,681.2990 Y•140,244.5911

END. ℄ A031 P.O.E. STA. 104+02.99 ℄ A031 •STA. 104+02.99 FAP I-IR-35-3(74)121 X•2,151,347.8356 Y•140,353.1779

CURVE NO. A028-1 P.I. STA. 62+45.08 N: 141200.8776 E: 2150962.3940 Δ= 62°15'27.49" RT. D= 28°38'52.40" T= 120.78' L= 217.32' R= 200.00' LC= 206.79' C= S31°37'48.37"E

CURVE NO. A004-1 P.I. STA. A 443+16.88 N: 141376.5912 E: 2151087.7076 Δ= 23°33'28.00" LT. D= 7°29'59.46" T= 159.31' L= 314.11' R= 763.96' LC= 311.9021' V= 57°20'30.3879"E

CURVE NO. A008-1 P.I. STA. 64+04.37 N: 141421.5348 E: 2150947.4722 Δ= 5°20'44.15" LT. D= 2°00'00.00" T= 133.74' L= 267.28' R= 2864.79' LC= 267.18' C= S2°10'16.63"W

BM#34-"X" ON CURB S.W. RETURN OF S.E. SERVICE ROAD & S.E. 82ND STREET 148.34' RT. ℄ A035 A035 STA. 53+58.07

BM#35- "X" ON CURB E. SIDE OF MEDIAN ON 80TH STREET 348.75' RT. ℄ A035 A035 STA. 59+58.93

LINDA BROCK NELSON REV.TRUST

KWL PROPERTIES LLC.

MVP INVESTMENTS LLC

MVP INVESTMENTS LLC (BLAZERS ICE CTR)

OKC 15' FIRE LINE U/E

STREET EASEMENT

SCALE: 1" = 50'

SEC. 35, T-11-N, R-3-W

PLS			POE & ASSOCIATES, OKLAHOMA CITY, OK SURVEY DIVISION
DRAWN			SURVEY DATA SHEET
CHECKED			
APPROVED			
CREW	POE		SWO 29231(1) PROJECT NO. 09032(17) SHEET NO. SD37

SDS 37 OF 46

OKLAHOMA COUNTY

•STA. 104+02.99 FAP I-IR-35-3(74)121

SEC. 34, T-11-N, R-3-W

POE & ASSOCIATES, OKLAHOMA CITY, OK

BM#28-"X" ON EAST CURB OF PARKING LOT. 136.00' LT. ℄ A035
A035 STA. 65+16.94

BM#27-"X" IN DRIVEWAY EAST OF FRONT DOOR BODYWORKS INC.
177.72' LT. ℄ A035
A035 STA. 68+21.51

BM#26- #6 X 30" LG. REBAR
526.25' LT. ℄ A035
A035 STA. 72+81.56

Curve No. A003-6
P.I. Sta. A 434+21.88
N: 141825.8207
E: 2150712.9264
Δ= 5°56'11.01" RT.
D= 2°00'00.00"
T= 148.54'
L= 296.82'
R= 2864.79'
LC= 296.6870'
C= S3°28'10.87"E

CURVE NO. A007-5
P.I. STA. 70+59.97
N: 142070.7722
E: 2150751.2824
Δ= 5°56'14.93" RT.
D= 4°29'59.99"
T= 66.03'
L= 131.94'
R= 1273.24'
LC= 131.89'
C= N3°28'12.87"W

H&H ASSOCIATES OF NORMAN LIMITED PARTNERSHIP

Curve No.A003-5
P.I. Sta. A 428+69.64
N: 142383.0775
E: 2150650.0467
Δ= 37°14'52.21" RT.
D= 15°59'59.78"
T= 120.68'
L= 232.80'
R= 358.10'
LC= 228.7220'
C= S25°03'42.87"E

CURVE NO. A007-4
P.I. STA. 66+19.26
N: 141631.3205
E: 2150781.1312
Δ= 4°17'21.02" RT.
D= 3°00'00.00"
T= 71.52'
L= 142.97'
R= 1909.86'
LC= 142.94'
C= N2°38'45.87"W

W.RAY PELFREY REV.TRUST (DEPT.OF CORRECTIONS)

(BODYWORKS INC.)

MID AMERICA CHRISTIAN UNIV.

MVP INVESTMENTS LLC (BLAZERS ICE CTR.)

OKLAGAS & ELEC. FOUNDATION INC.

79TH STREET

CURVE NO. A007-6A
P.I. STA. 72+42.64
N: 142253.5445
E: 2150749.6963
Δ= 12°01'24.49" LT.
Ts= 150.29'
Sc= 231.99

CURVE NO. A007-6B
P.I. STA. 74+63.28
N: 142456.5707
E: 2150667.2820
Δ= 12°01'24.49" LT.
Sf= 150.29'
Cs= 231.99

CURVE NO. A007-6
P.I. STA. 73+53.31
N: 142362.0345
E: 2150725.6767
Δ= 19°16'28.87" LT.
D= 15°59'59.78"
T= 60.81'
L= 120.47'
R= 358.10'
LC= 119.90'
C= N22°5'37.2"W

CURVE NO. A008-1
P.I. STA. 64+04.37
N: 141421.5348
E: 2150947.4722
Δ= 5°20'44.15" LT.
D= 2°00'00.00"
T= 133.74'
L= 267.28'
R= 2864.79'
LC= 267.18'
C= S2°10'16.63"W

CURVE NO. A004-1
P.I. STA. A 443+16.88
N: 141376.5912
E: 2151087.7076
Δ= 23°33'28.00" LT.
D= 7°29'59.46"
T= 159.31'
L= 314.11'
R= 763.96'
LC= 311.9021'
V= S7°20'30.3879"E

CURVE NO. A004-2
P.I. STA. A 445+96.92
N: 141645.4330
E: 2150994.5042
Δ= 18°37'09.04" RT.
D= 7°29'59.53"
T= 125.23'
L= 248.26'
R= 763.96'
LC= 247.1691'
C= S9°48'39.87"E

CURVE NO. A008-2
P.I. STA. 73+75.59
N: 142380.0152
E: 2150955.7160
Δ= 47°02'30.05" RT.
D= 16°47'04.95"
T= 148.57'
L= 280.27'
R= 341.36'
LC= 272.46'
C= N24°25'13.33"E

CURVE NO. A004-3
P.I. STA. A 453+05.57
N: 142356.2692
E: 2150988.2824
Δ= 47°02'27.11" RT.
D= 12°29'59.63"
T= 199.50'
L= 376.33'
R= 458.37'
LC= 365.8490'
C= S23°1'08.1847"W

BM#36- "T" ON S. CURB OF S.E. 79TH ST. & S.E. SERVICE ROAD
234.04' RT. ℄ A035
A035 STA. 66+79.07

BM#37- "X" ON N. HEADWALL @ S.W. ENTR. OF O.G.&E. YARD.
865.26' RT. ℄ A035
A035 STA. 67+15.69

BM#38- #6 REBAR 6' W. OF O.G.&E. FENCE, 3RD LIGHT POLE FROM N. 954.34' RT. ℄ A035
A035 STA. 71+85.21=
693.64' RT. ℄ A034 STA. 437+77.03

CALCULATED POINT

*4 REBAR

SCALE: 1" = 50'

PLS		
DRAWN		
CHECKED		
APPROVED		
CREW	POE	

POE & ASSOCIATES, OKLAHOMA CITY, OK
SURVEY DIVISION

SURVEY DATA SHEET

SWO 2923(1) PROJECT NO. 03032(17) SHEET NO. SD38

OKLAHOMA COUNTY

SDS 38 OF 46

SEC. 35, T-11-N, R-3-W

SEC.27, T-11-N, R-3-W

SEC.34 T-11-N R-3-W

SEC.35 T-11-N R-3-W

SEC.26, T-11-N R-3-W

BM#4- "X" ON CURB S. SIDE OF 73ST STREET 520.15' LT. ℄ A035 A035 STA. 89+03.86

BM#5- "X" ON CURB @ CNTR. OF STORM INLET 258.21' LT ℄ A035 A035 STA. 85+81.41= 551.64' LT. ℄ A034 STA. 424+65.14

BM#3- "X" ON CURB N. SIDE OF 71ST STREET 326.63' LT. ℄ A035 A035 STA. 92+35.03

BM#58- "X" ON TOP OF CURB IN N.W. PARKING LOT OF BEST BUY 171.55' RT. ℄ A035 A035 STA. 88+25.03 EL=1289.40

POE & ASSOCIATES, OKLAHOMA CITY, OK

CLOVER LEAF MANOR ADDITION

PLATTED 15' U/E

71ST STREET

BLOCK LINE

ASHBY TERR.

CC BL ASHBY TERR.

℄ SURVEY A034

℄ SURVEY A035

CURVE NO. A007-7
P.I. STA. 82+48.81
N: 143005.5397
E: 2150107.3216
Δ= 23°01'29.16" LT.
D= 15°59'59.78"
T= 72.94'
L= 143.91'
R= 358.10'
LC= 142.9390
C= N67°6'52.55"W

CURVE NO. A007-7A
P.I. STA. 81+26.01
N: 142935.9859
E: 2150209.0654
Δ= 12°01'24.49" LT.
Ts= 150.29'
Sc= 231.99

Curve No.A003-4
P.I. Sta. A 420+73.29
N: 142964.2786
E: 2150080.3967
Δ= 46°51'25.05" RT.
D= 15°59'59.78"
T= 155.18'
L= 292.86'
R= 358.10'
LC= 284.7640'
C= S67°6'52.38"E

Curve No.A005-1
P.I. Sta. A 421+82.51
N: 143166.9547
E: 2150196.4186
Δ= 20°40'47.97" LT.
D= 15°59'59.78"
T= 65.34'
L= 129.25'
R= 358.10'
LC= 128.55'
C= N67°7'1.29"E

CURVE NO. A005-1B
P.I. STA. A 422+96.73
N: 143230.3049
E: 2150293.1685
Δ= 12°01'24.22" LT.
Sf= 150.29'
Cs= 231.99

CURVE NO. A001-4
P.I. STA. A 421+66.99
N: 143200.4825
E: 2150172.4244
Δ= 44°40'47.38" LT.
D= 15°59'59.78"
T= 147.16'
L= 279.25'
R= 358.10'
LC= 272.2280'
C= N67°7'01.3105"E

CURVE NO. A001-5
P.I. STA. A 428+07.95
N: 143666.1653
E: 2150634.4983
Δ= 37°40'30.20" LT.
D= 15°59'59.78"
T= 122.17'
L= 235.47'
R= 358.10'
LC= 231.2507'
C= N25°56'22.719"E

Curve No.A005-2A
P.I. STA. A 428+32.51
N: 143627.6006
E: 2150652.7958
Δ= 12°01'24.18" LT.
Ts= 150.29'
Sc= 231.99

Curve No.A005-2
P.I. Sta. A 429+49.14
N: 143726.0371
E: 2150716.1588
Δ= 21°07'11.73" LT.
D= 15°59'59.78"
T= 66.76'
L= 132.00'
R= 358.10'
LC= 131.25'
C= N22°12'57"E

Curve No.A005-2B
P.I. STA. A 430+64.69
N: 143840.6869
E: 2150739.8235
Δ= 12°01'24.69" LT.
St= 150.29'
Cs= 231.99

Curve No.A005-3
P.I. Sta. A 432+79.92
N: 144056.3571
E: 2150738.5139
Δ= 4°49'36.85" RT.
D= 3°31'59.91"
T= 68.35'
L= 136.61'
R= 1621.59'
LC= 373.45'
C= S3°22'44.1485"W

CURVE NO. A001-6
P.I. STA. A 432+47.35
N: 144110.9869
E: 2150689.9205
Δ= 7°26'46.96" LT.
D= 1°59'33.05"
T= 187.12'
L= 373.72'
R= 2875.55'
LC= 373.4540'
C= S3°22'44.1485"W

CURVE NO. A002-2
P.I. STA. 86+11.17
N: 143621.1908
E: 2150972.5032
Δ= 41°14'48.62" RT.
D= 15°59'59.78"
T= 134.77'
L= 257.79'
R= 358.10'
LC= 252.2630'
C= S24°47'49.83"E

Curve No.A006-3
P.I. Sta. 93+36.35
N: 143899.7346
E: 2150892.4278
Δ= 6°44'27.10" RT.
D= 4°59'59.93"
T= 67.49'
L= 134.82'
R= 1145.92'
LC= 134.74'
C= N3°42'49.71"W

Curve No.A006-4
P.I. Sta. 95+57.74
N: 144120.0961
E: 2150873.0243
Δ= 6°44'24.00" RT.
D= 3°24'00.00"
T= 99.23'
L= 198.24'
R= 1685.17'
LC= 198.12'
C= N3°42'51.33"W

Curve No.A006-5
P.I. Sta. 97+47.51
N: 144309.8469
E: 2150866.5174
Δ= 4°34'25.95" RT.
D= 3°24'00.00"
T= 67.30'
L= 134.53'
R= 1685.17'
LC= 134.49'
C= N2°37'52.33"W

CURVE NO. A002-3
P.I. STA. 90+95.15
N: 144115.5961
E: 2150936.4243
Δ= 3°49'46.02" RT.
D= 2°00'00.00"
T= 95.77'
L= 191.47'
R= 2864.79'
LC= 191.4370'
C= S2°15'32.33"

Curve No.A006-2A
P.I. STA. 89+30.53
N: 143514.0636
E: 2150990.7747
Δ= 12°01'24.49" RT.
Ts= 150.29'
Sc= 231.99

Curve No.A006-2B
P.I. STA. 91+62.43
N: 143725.8868
E: 2150901.3776
Δ= 12°01'24.49" RT.
St= 150.29'
Cs= 231.99

Curve No.A006-2
P.I. Sta. 90+47.01
N: 143611.6654
E: 2150926.3862
Δ= 21°04'36.47" RT.
D= 15°59'59.78"
T= 66.62'
L= 131.73'
R= 358.10'
LC= 130.99'
C= N22°52'53.41"W

P.O.T. STA.79+77.14 ℄ A035 SURVEY
• P.I. STA.428+14.28 ℄ A034 SURVEY
& E-W SEC.LINE 97.000' E.TO SEC.COR.
2745.363' E.TO 1/4 SEC.COR.2,541.720
W.TO 1/4 SEC.COR.
X-2,150.824.6854 Y-142.996.3594

P.I. STA.79+79.44 ℄ A035 SURVEY
Δ=0°09'33.96" Rt.
X-2,150.824.6854 Y-142.996.3594

P.O.T. STA.79+77.15 ℄ A035 SURVEY
•79+15.83 FAP I-38(41)
P.I. STA.79+79.44 ℄ A035 SURVEY
• 0°09'33.96" Rt.
X-2,150.824.6853 Y-142.986.6493

P.I. STA.428+14.28 ℄ A034 SURVEY
& E-W SEC.LINE 97.000' E.TO SEC.COR.
2745.363' E.TO 1/4 SEC.COR.
W.TO 1/4 SEC.COR.
X-2,150.824.6854 Y-142.996.3594

P.I. STA.429+12.77 ℄ A034 SURVEY
& E-W SEC.LINE 11.74' N.TO SEC.COR.
2,658.920' N.TO 1/4 SEC.COR.
S.TO 1/4 SEC.COR. Δ= 0°00'00.14" Lt.
X-2,150.921.8313 Y-142.980.1053

P.O.T. STA.85+00.00 ℄ A035 SURVEY
X-2,150.821.5375 Y-143,519.2099

S.C. STA.A 421+11.17 ℄ A005
X-2,150.132.6419 Y-143,152.7655

C.S. STA.A 422+46.42 ℄ A005
X-2,150.251.0751 Y-143,202.7522

P.T. STA.A 422+99.09 ℄ A001
X-2,150.276.0760 Y-143,304.9437

S.T. STA.A 423+96.72 ℄ A005
X-2,150.363.8955 Y-143,301.8035

P.C. STA.A 426+85.79 ℄ A001
X-2,150.548.4484 Y-143,357.9435

T.S. STA.A 427+32.09 ℄ A005
X-2,150.582.0510 Y-143,566.3197

S.C. STA.A 428+82.38 ℄ A005
X-2,150.680.0193 Y-143,669.9076

P.T. STA.A 429+21.26 ℄ A001
X-2,150.649.6031 Y-143,787.3969

C.S. STA.A 430+14.38 ℄ A005
X-2,150.729.6460 Y-143,791.4181

S.T. STA.A 431+64.67 ℄ A005
X-2,150.739.2063 Y-143,941.1131

P.C. STA.A 430+60.23 ℄ A001
X-2,150.666.7851 Y-143,925.3006

P.C. STA.A 432+11.57 ℄ A005
X2,150.738.9245 Y-143,988.0122

P.O.T. STA.90+00.00 ℄ A035 SURVEY
X-2,150.818.5333 Y-144,019.2009

P.I. STA.A 433+48.18 ℄ A005
X-2,150.743.8557 Y-144,124.4912

P.T. STA.A 434+33.94 ℄ A001
X-2,150.688.7962 Y-144,298.1055

P.I. STA.A 436+36.11 ℄ A005
X-2,150.766.3597 Y-144,411.5434

T.S. STA.88+30.10 ℄ A006
X-2,151.062.3159 Y-143,443.5820

PC. STA.84+76.40 ℄ A002
X2-151.068.4955 Y-143,526.5975

SC. STA.89+80.39 ℄ A006
X-2,150.963.0776 Y-143,556.0621

C.S. STA.91+12.12 ℄ A006
X-2,150.912.1455 Y-143,676.7437

P.T. STA.87+34.20 ℄ A002
X-2,150.962.6946 Y-143,755.6014

S.T. STA.92+62.42 ℄ A006
X-2,150.900.7895 Y-143,826.3132

P.C. STA.92+68.87 ℄ A006
X-2,150.900.7508 Y-143,832.7631

P.T. STA.94+03.68 ℄ A006
X-2,150.892.0234 Y-143,967.2201

PC. STA.89+99.38 ℄ A002
X-2,150.943.3946 Y-144,020.0781

P.C. STA.94+58.50 ℄ A006
X-2,150.885.2625 Y-144,021.6216

P.T. STA.91+90.85 ℄ A002
X-2,150.935.8469 Y-144,211.3663

P.T. STA.96+56.74 ℄ A006
X-2,150.872.4281 Y-144,219.3265

P.C. STA.96+80.21 ℄ A006
X-2,150.872.2870 Y-144,242.7960

P.C. STA.98+30.62 ℄ A006
X-2,150.866.1130 Y-144,377.1442

P.C. STA.94+31.50 ℄ A002
X-2,150.937.2948 Y-144,452.0120

P.T. STA.99+65.14 ℄ A006
X-2,150.858.5775 Y-144,527.3140

T.S. STA.80+25.58 ℄ A007
X-2,150.278.4218 Y-142,863.3533

P.T. STA.A 422+10.97 ℄ A003
X-2,150.187.5772 Y-142,852.0661

S.C. STA.81+75.88 ℄ A007
X-2,150.167.5044 Y-142,964.3351

P.O.T. STA.A 425+09.66
X-2,150.524.2414
Y-143,046.6284

CALCULATED POINT

*4 REBAR

BEST BUY REALTY INCOME CORP

15' OKC. W/L U/E

10' DNG U/E

10' U/E OG&E

CROSSROADS SOUTH LIMITED TRACT D

SCALE: 1" = 50'

PLS			POE & ASSOCIATES, OKLAHOMA CITY, OK SURVEY DIVISION
DRAWN			SURVEY DATA SHEET
CHECKED			
APPRDVED			
CREW	POE	SWO 29231(1)	PROJECT NO. 09032(17) SHEET NO. SD39

SDS 39 OF 46

OKLAHOMA COUNTY

SEC.27, T-11-N, R-3-W

SEC.26, T-11-N, R-3-W

POE & ASSOCIATES, OKLAHOMA CITY, OK

BM#1- "X" ON CURB E. SIDE OF PARKING LOT OF ARBY'S 155.87' LT, ℄ A035 A035 STA. 105+35.58

BM#2 - #5 REBAR 295.24' LT, ℄ A035 (CONTROL PT. "O-55-1837") A035 STA. 101+11.28

BM#59 - "□" ON TOP CONCRETE HEADWALL. (CONTROL PT. "RAMADA") 131.47' RT. ℄ A035 A035 STA. 94+25.50

BM#60 "X" ON CURB W. SIDE OF RAMADA HOTEL PARKING LOT. 176.35' RT. ℄ A035 A035 STA. 101+09.27

BM FIRESTONE- "□" ⌀ S.W. CORNER OF BLDG. JACKIE COOPER/ FIRESTONE 204.35' RT, ℄ A035 A035 STA. 107+92.56

CURVE NO. A001-7
P.I. STA. A 436+42.83
N: 144506.9863
E: 2150687.5429
Δ= 2°17'26.00" LT.
D= 2°59'40.34"
T= 38.25'
L= 76.49'
R= 1913.34'
LC= 76.4860'
C= S1°29'12.49"E

CURVE NO. A001-8
P.I. STA. A 441+51.12
N: 145014.9945
E: 2150670.5373
Δ= 2°17'26.03" RT.
D= 3°00'00.00"
T= 38.18'
L= 76.35'
R= 1909.86'
LC= 76.347'
C= S1°29'22.33"E

CURVE NO. A002-4
P.I. STA. 94+95.08
N: 144515.5946
E: 2150936.9128
Δ= 3°48'49.01" RT.
D= 3°00'00.00"
T= 63.58'
L= 127.12'
R= 1909.86'
LC= 127.0970'
C= S1°33'45.17"W

CURVE NO. A002-5
P.I. STA. 97+95.71
N: 144815.8374
E: 2150951.1984
Δ= 3°48'49.01" RT.
D= 3°00'00.00"
T= 63.58'
L= 127.12'
R= 1909.86'
LC= 127.0970'
C= S1°51'03.05"W

CURVE NO. A005-5
P.I. Sta. A 445+69.04
N: 145341.8198
E: 2150710.5847
Δ= 24°45'21.47" LT.
D=229°10'59.22"
T= 5.49'
L= 10.80'
R= 25.00'
LC= 10.72'
C= S17°57'57.38"E

Curve No.A005-4
P.I. Sta. A 441+51.63
N: 144926.3742
E: 2150751.2287
Δ= 2°19'40.01" LT.
D= 2°00'00.00"
T= 58.20'
L= 116.39'
R= 2864.79'
LC= 76.35'
C= S1°29'22.33"E

Curve No.A006-6
P.I. Sta. 98+97.91
N: 144460.0166
E: 2150858.9819
Δ= 4°34'25.95" RT.
D= 3°24'00.00"
T= 67.30'
L= 134.53'
R= 1685.17'
LC= 134.49'
C= N2°37'52.33"W

Curve No.A006-7
P.I. Sta. 100+57.84
N: 144620.0121
E: 2150857.9946
Δ= 5°01'27.04" RT.
D= 3°00'00.00"
T= 83.79'
L= 167.47'
R= 1909.86'
LC= 167.42'
C= N2°10'4.17"E

Curve No.A006-8
P.I. Sta. 107+02.89
N: 145263.0183
E: 2150910.6323
Δ= 24°58'35.66" RT.
D=229°10'59.22"
T= 5.54'
L= 10.90'
R= 25.00'
LC= 10.81'
C= N17°10'4.17"E

CURVE NO. A002-6
P.I. STA. 102+95.67
N: 145315.6976
E: 2150952.7434
Δ= 3°35'43.01" RT.
D= 3°00'00.00"
T= 59.94'
L= 119.84'
R= 1909.86'
LC= 119.8230'
C= S1°27'12.17"W

Curve No. A032-1
P.I. Sta. 108+56.33
N: 145872.2159
E: 2150707.4017
Δ= 26°21'31.33" LT.
D=229°10'59.22"
T= 5.85'
L= 11.50'
R= 25.00'
LC= 11.4'
C= S16°28'33.17"W

CURVE NO. A002-7
P.I. Sta. 106+18.55
N: 145638.0917
E: 2150971.0560
Δ= 6°35'41.96" LT.
D= 4°59'59.99"
T= 66.02'
L= 131.90'
R= 1145.92'
LC= 131.8270'
C= S0°02'47.33"E

SCALE:
1" = 50'

END. ℄ A030
P.O.T. STA. 214+02.99 ℄ A030
+ STA. 214+02.99 FAP IR -35-3(074)121
X=2,151,308.7961 Y=145,641.3027

PLS
DRAWN
CHECKED
APPROVED
CREW POE

POE & ASSOCIATES, OKLAHOMA CITY, OK
SURVEY DIVISION

SURVEY DATA SHEET

SWO 2923(1) PROJECT NO. 09032(11) SHEET NO. SD40

SDS 40 OF 46

OKLAHOMA COUNTY

SEC.27, T-11-N, R-3-W

POE & ASSOCIATES, OKLAHOMA CITY, OK

SCALE: 1" = 50'

Curve No.A032-1
P.I. Sta. 108+56.33
N: 145872.2159
E: 2150707.4017
Δ= 26°21'31.33" LT.
D=229°10'59.22"
T= 5.85'
L= 11.50'
R= 25.00'
LC= 11.4'
C= S16°28'33.17"W

CURVE NO. A001-9
P.I. STA. A 454+66.43
N: 146330.2904
E: 2150662.6343
Δ= 4°49'37.05" RT.
D= 3°00'00.00"
T= 80.50'
L= 160.90'
R= 1909.86'
LC= 160.8510'
C= S2°04'09.17"W

Curve No.A032-2
P.I. Sta. 115+27.47
N: 146542.4496
E: 2150746.0004
Δ= 4°54'26.64" RT.
D= 3°00'00.00"
T= 81.84'
L= 163.58'
R= 1909.86'
LC= 163.53'
C= S5°44'58.99"W

CURVE NO. A001-10
P.I. STA. A 463+76.74
N: 147237.9132
E: 2150733.7898
Δ= 9°15'10.99" RT.
D= 1°00'00.00"
T= 463.66'
L= 925.31'
R= 5729.58'
LC= 924.30'
C= S9°06'33.17"W

LONG TERM PROPERTIES LLC.
FEED THE CHILDREN / SPECIALTY INTERMEDIATE / STORM SAFE

BLUE BELL ICE CREAM
BLUE BELL OPERATING L.P.

BONE RANDALL & BONE GLORIA J.

PIERCE BILLIE JO TRS.
FIRST CASH PAWN

RANDALL PATRICIA TRS.
COLOR CREATION /
PRIME TIME MOTOR SPORTS

GARY OWENS CONSTRUCTION LLC.

NAJAFABADI MOHAMMADALI
EAGLE CARS

PKK HOLDINGS LLC.

TIO CHUYS
AUTO SALES LLC.

TIO CHUYS
AUTO SALES INC.

JHS HOMES &
HOLDINGS INC.

CURVE 4
℄ EXIST. A035 SURVEY
P.I. STA. 122+03.22
X=2,150,799.2871
Y=147,222.3501
Δ=17°34'17.16" RT.
D= 1°00'00.00"
R=5729.58'
T= 885.52'
L= 1,757.14'
C= N8°26'29.25"E
LC= 1,750.27'

CURVE NO. A002-8
P.I. STA. 109+96.64
N: 146015.6788
E: 2150948.7650
Δ= 3°00'02.32" RT.
D= 3°00'00.00"
T= 50.02'
L= 100.02'
R= 1909.86'
LC= 100.010'
C= S2°06'18.75"E

Curve No.A033-1
P.I. Sta. A 121+16.91
N: 147129.7417
E: 2150898.3511
Δ= 13°02'01.92" RT.
D= 3°00'00.00"
T= 218.17'
L= 434.46'
R= 1909.86'
LC= 433.5260'
C= S11°59'44.73"W

CURVE NO. A002-9
P.I. STA. 120+23.70
N: 147042.2975
E: 2150929.5169
Δ= 13°42'27.10" RT.
D= 2°00'00.00"
T= 344.33'
L= 685.38'
R= 2864.79'
LC= 683.7430'
C= N6°30'53.2723"E

CALCULATED POINT

*4 REBAR

*5 REBAR

"X" ON CURB

"X" ON CONC. IN LIGHT POLE

PLS			POE & ASSOCIATES, OKLAHOMA CITY, OK
DRAWN			SURVEY DIVISION
CHECKED			**SURVEY DATA SHEET**
APPROVED			
CREW	POE		SWO 29231(1) PROJECT NO. 09032(17) SHEET NO. SD41

OKLAHOMA COUNTY

SDS 41 OF 46

SEC.26, T-11-N, R-3-W

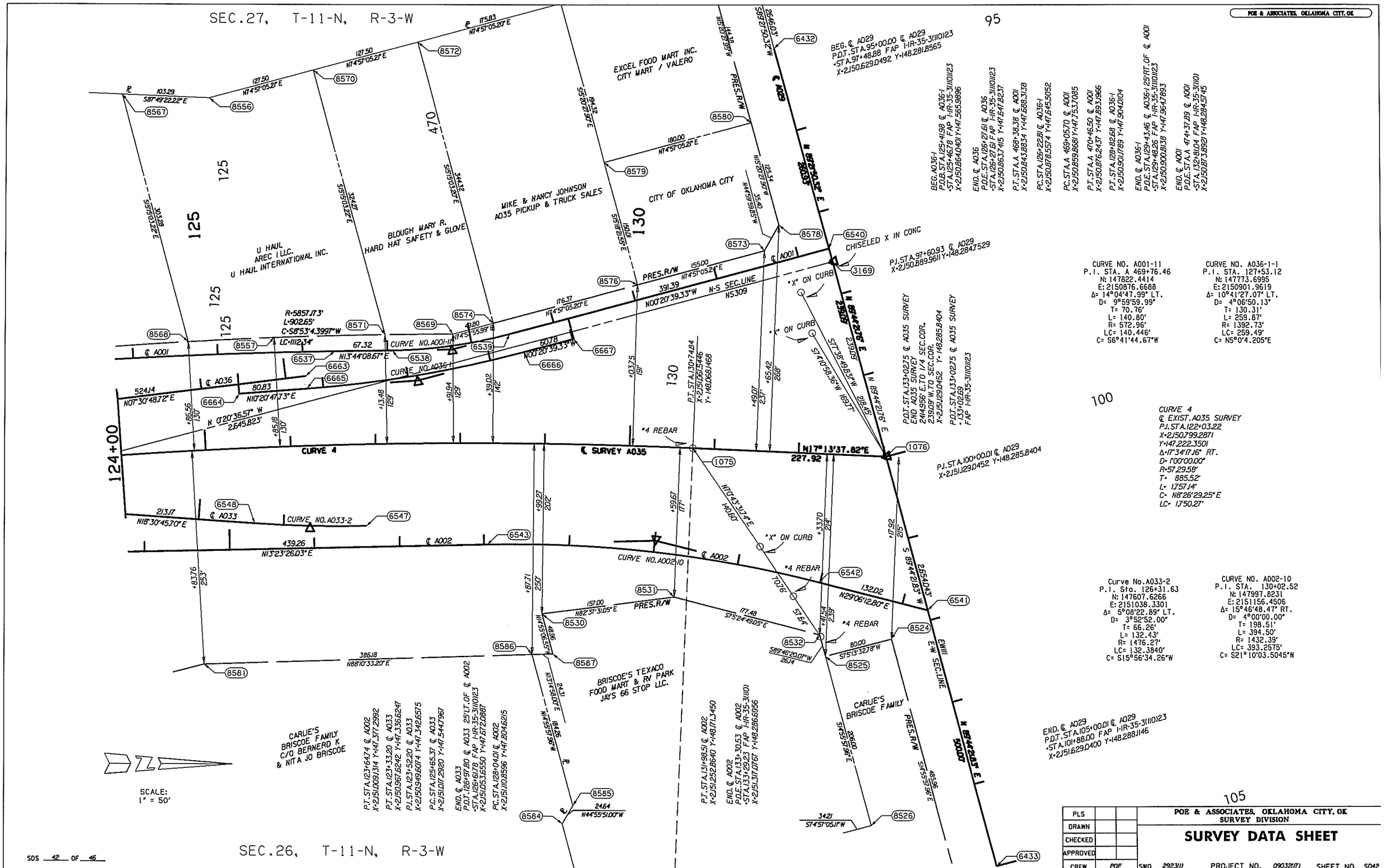

SEC.27, T-11-N, R-3-W
SEC.26, T-11-N, R-3-W
POE & ASSOCIATES, OKLAHOMA CITY, OK
EXCEL FOOD MART INC.
CITY MART / VALERO
MIKE & NANCY JOHNSON
A035 PICKUP & TRUCK SALES
CITY OF OKLAHOMA CITY
BLOUGH MARY R.
HARD HAT SAFETY & GLOVE
U HAUL
AREC I LLC.
U HAUL INTERNATIONAL INC.
BRISCOE'S TEXACO
FOOD MART & RV PARK
JAY'S 66 STOP LLC.
CARLIE'S
BRISCOE FAMILY
C/O BERNERD K
& NITA JO BRISCOE
CHISELED X IN CONC
CURVE 4
℄ SURVEY A035
N17°13'37.82"E
227.92
CURVE NO. A001-11
CURVE NO. A036-1
CURVE NO. A033-2
CURVE NO. A002-10
CURVE NO. A001-11
P.I. STA. A 469+76.46
N: 147822.4414
E: 2150876.6688
Δ= 14°04'47.99" LT.
D= 9°59'59.99"
T= 70.76'
L= 140.80'
R= 572.96'
LC= 140.446'
C= S6°41'44.67"W
CURVE NO. A036-1-1
P.I. STA. 127+53.12
N: 147773.6995
E: 2150901.9619
Δ= 10°41'27.07" LT.
D= 4°06'50.13"
T= 130.31'
L= 259.87'
R= 1392.73'
LC= 259.49'
C= N5°0'4.205"E
CURVE 4
℄ EXIST. A035 SURVEY
P.I. STA. 122+03.22
X=2,150,799.2871
Y=147,222.3501
Δ=17°34'17.16" RT.
D= 1°00'00.00"
R=57,29.58'
T= 885.52'
L= 1,757.14'
C= N8°26'29.25"E
LC= 1,750.27'
Curve No. A033-2
P.I. Sta. 126+31.63
N: 147607.6266
E: 2151038.3301
Δ= 5°08'22.89" LT.
D= 3°52'52.00"
T= 66.26'
L= 132.43'
R= 1476.27'
LC= 132.3840'
C= S15°56'34.26"W
CURVE NO. A002-10
P.I. STA. 130+02.52
N: 147997.8231
E: 2151156.4506
Δ= 15°46'48.47" RT.
D= 4°00'00.00"
T= 198.51'
L= 394.50'
R= 1432.39'
LC= 393.2575'
C= S21°10'03.5045"W
SCALE:
1" = 50'
SDS 42 OF 46
PLS
DRAWN
CHECKED
APPROVED
CREW
POE
POE & ASSOCIATES, OKLAHOMA CITY, OK
SURVEY DIVISION
SURVEY DATA SHEET
SWO 2923(1)
PROJECT NO. 09032(17)
SHEET NO. SD42
OKLAHOMA COUNT

SECTION CORNER
ODOT# O-55-97
SET SANDSTONE 14 X 12 X 3
G.L.O. NOTES APPROVED 09-23-1873
OKLAHOMA CERTIFIED CORNER RECORD DATED 07-30-2002
FOUND CHISELED X IN CONC
X=2150889.9611 Y= 148284.7529

1/4 SECTION CORNER
ODOT# O-55-1368
SET 14 X 10 X 4 SANDSTONE
GLO NOTES APPROVED 09-23-1873
OKLAHOMA CERTIFIED CORNER RECORD 01-13-1997
FOUND PK NAIL
X=2145619.0344 Y= 145578.6212

CENTER 1/4 SECTION CORNER
ODOT# O-55-1314
OKLAHOMA CERTIFIED CORNER RECORD 07-30-2002
FOUND PK NAIL
X=2148266.4141 Y= 145611.9997

1/4 SECTION CORNER
ODOT# O-55-99
SET SANDSTONE 15 X 13 X 4
G.L.O NOTES APPROVED 09-23-1873
OKLAHOMA CERTIFIED CORNER RECORD 07-30-2002
SET CHISELED X IN PAVEMENT FROM EXISTING REFERENCE POINTS
X=2150905.8228 Y= 145638.9775

SECTION CORNER
ODOT# O-55-1367
SET 16 X 12 X 3 SANDSTONE
G.L.O. NOTES APPROVED 09-23-1873
OKLAHOMA CERTIFIED CORNER RECORD 02-12-1985
FOUND 1/2" I.P.
X=2145642.3196 Y= 142947.5057

1/4 SECTION CORNER
ODOT# O-55-1313
SET 14 X 12 X 3 SANDSTONE
OKLAHOMA CERTIFIED CORNER RECORD 03-22-2006
FOUND PK NAIL
X=2148283.0793 Y= 142972.3253

SECTION CORNER
ODOT# O-55-634
SET 16 X 12 X 5 SANDSTONE
FOUND 1/2" IRON PIN
X=2150921.6810 Y= 142997.2789

SCALE:
1" = 400'

NOTE: REFERENCE'S SHOWN ARE NOT TO SCALE.

PLS			POE & ASSOCIATES, OKLAHOMA CITY, OK SURVEY DIVISION
DRAWN			SURVEY DATA SHEET
CHECKED			
APPROVED			
CREW	POE		SWO 23231(1) PROJECT NO. 09032(17) SHEET NO. SD43

SDS 43 OF 46

SECTION CORNER
ODOT# 0-55-1367
SET 16 X 12 X 3 SANDSTONE
G.L.O. NOTES APPROVED 09-23-1873
OKLAHOMA CERTIFIED CORNER RECORD 02-12-1985
FOUND 1/2" I.P.
X=2145642.3196 Y= 142947.5057

1/4 SECTION CORNER
ODOT# 0-55-1313
SET 14 X 12 X 3 SANDSTONE
OKLAHOMA CERTIFIED CORNER RECORD 03-22-2006
FOUND PK NAIL
X=2148283.0793 Y= 142972.3253

SECTION CORNER
ODOT# 0-55-634
SET 16 X 12 X 5 SANDSTONE
FOUND 1/2" IRON PIN
X=2150921.6810 Y= 142997.2789

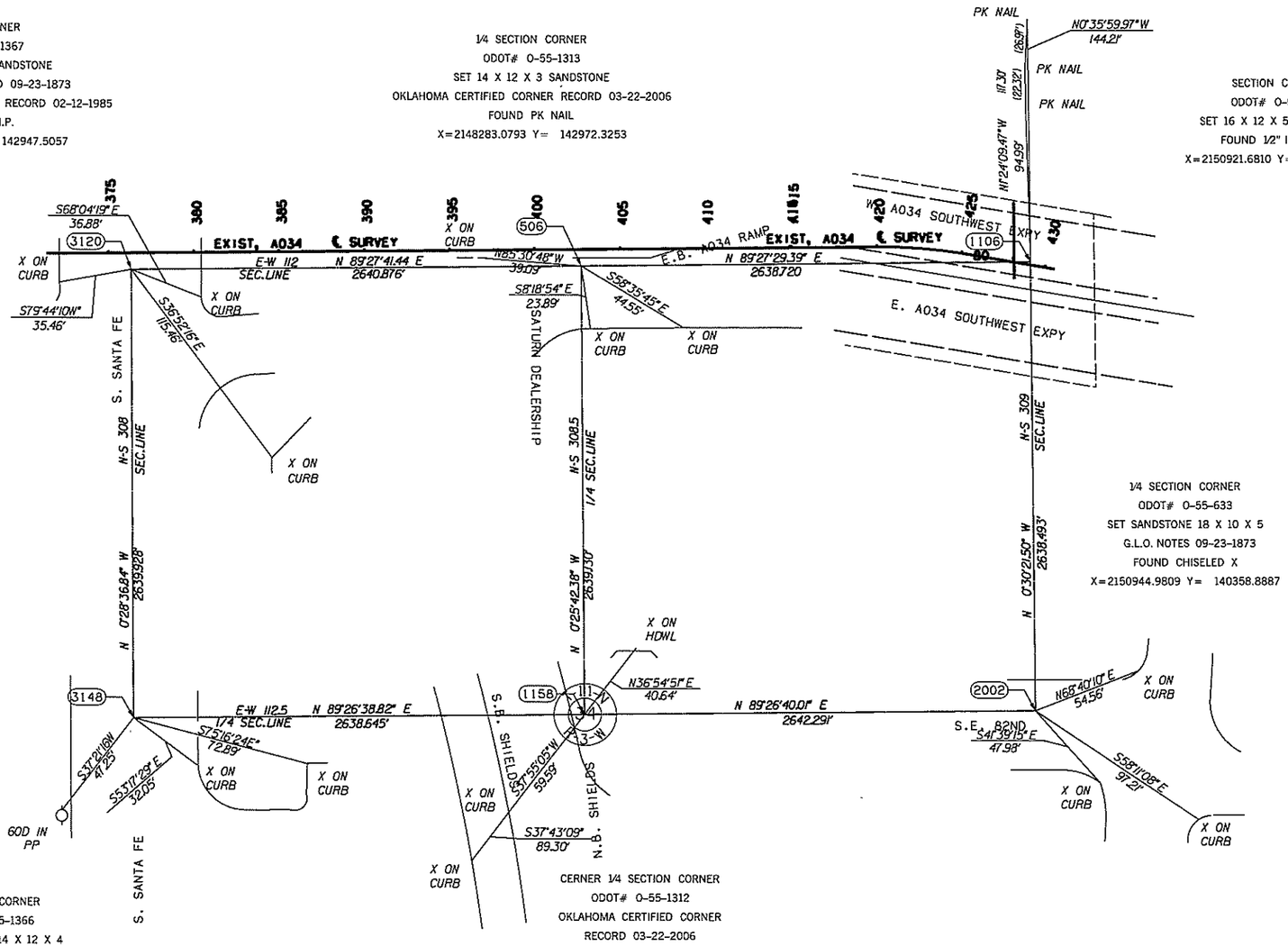

1/4 SECTION CORNER
ODOT# 0-55-633
SET SANDSTONE 18 X 10 X 5
G.L.O. NOTES 09-23-1873
FOUND CHISELED X
X=2150944.9809 Y= 140358.8887

1/4 SECTION CORNER
ODOT# 0-55-1366
SET SANDSTONE 14 X 12 X 4
G.L.O. NOTES 09-23-1873
OKLAHOMA CERTIFIED CORNER RECORD 02-12-1985
FOUND 3/8" IP
X=2145664.2927 Y= 140307.6692

CERNER 1/4 SECTION CORNER
ODOT# 0-55-1312
OKLAHOMA CERTIFIED CORNER
RECORD 03-22-2006
FOUND 1/2" I.P.
X=2148302.8137 Y= 140333.2689

SCALE:
1" = 400'

NOTE: REFERENCE'S SHOWN ARE NOT TO SCALE.

PLS			POE & ASSOCIATES, OKLAHOMA CITY, OK SURVEY DIVISION
DRAWN			**SURVEY DATA SHEET**
CHECKED			
APPROVED			
CREW	POE		SWO 2923(11) PROJECT NO. 03032(17) SHEET NO. SD44

SECTION CORNER
ODOT# 0-55-634
SET 16 X 12 X 5 SANDSTONE
FOUND 1/2" IRON PIN
X=2150921.6810 Y= 142997.2789

1/4 SECTION CORNER
ODOT# 0-55-627
SET SANDSTONE 14 X 12 X 3
G.L.O NOTES APPROVED 09-23-1873
OKLAHOMA CERTIFIED CORNER RECORD 07-30-2002
FOUND ODOT BRASS CAP MON. NO. 0-55-100
X=2153569.9771 Y= 143016.2160

SECTION CORNER
ODOT# 0-55-628
SET 18 X 15 X 3 FOR CORNER
G.L.O NOTES DATED 09-23-1873
OKLAHOMA CERTIFIED CORNER RECORD 02-12-2001
FOUND 1/2" I.P.
X=2156217.6966 Y= 143034.9922

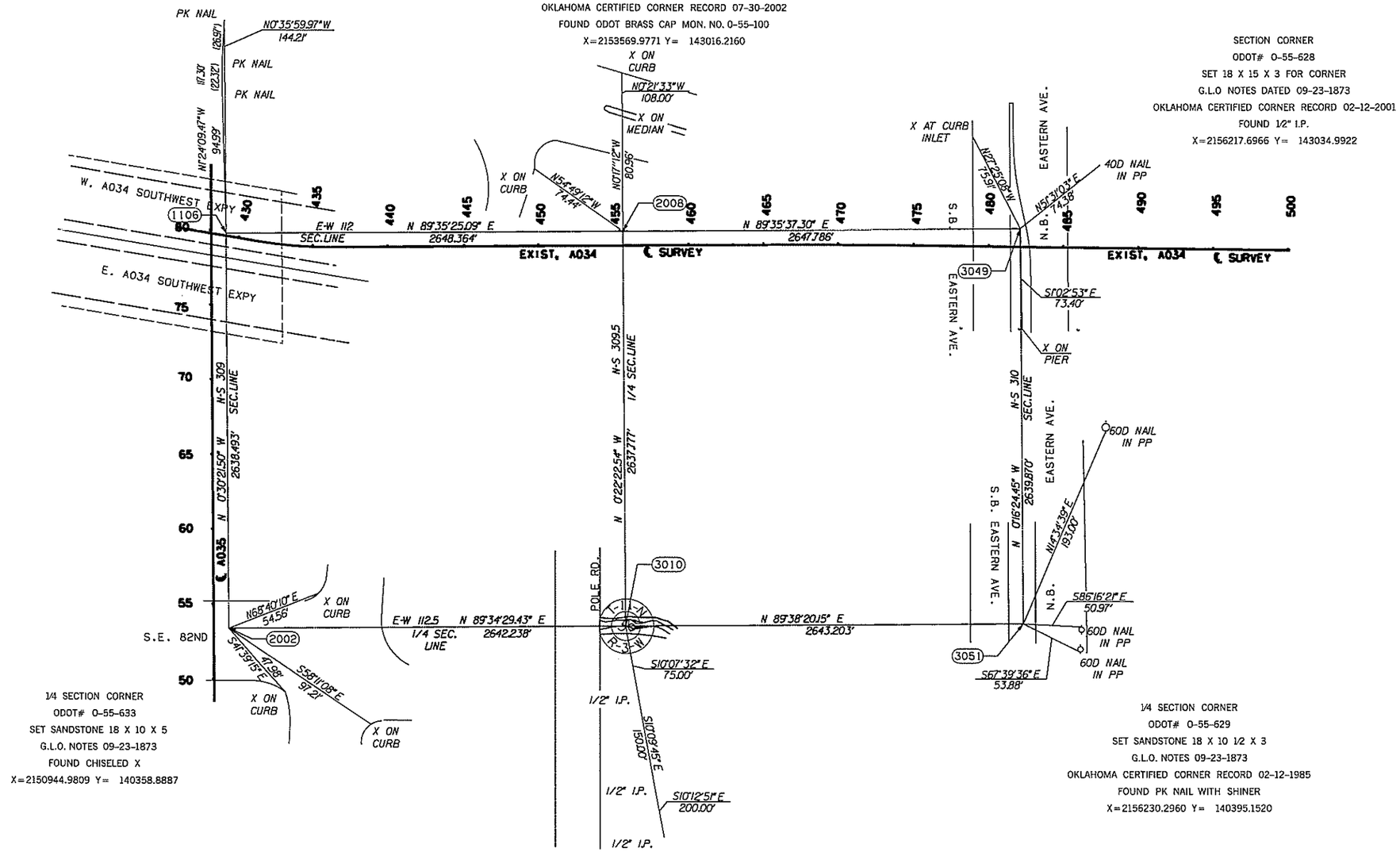

1/4 SECTION CORNER
ODOT# 0-55-633
SET SANDSTONE 18 X 10 X 5
G.L.O. NOTES 09-23-1873
FOUND CHISELED X
X=2150944.9809 Y= 140358.8887

CENTER 1/4 SECTION CORNER
ODOT# 0-55-635
OKLAHOMA CERTIFIED CORNER RECORD 07-30-2002
FOUND 3/8" I.P.
X=2153587.1457 Y= 140378.4950

1/4 SECTION CORNER
ODOT# 0-55-629
SET SANDSTONE 18 X 10 1/2 X 3
G.L.O. NOTES 09-23-1873
OKLAHOMA CERTIFIED CORNER RECORD 02-12-1985
FOUND PK NAIL WITH SHINER
X=2156230.2960 Y= 140395.1520

SCALE:
1" = 400'

NOTE: REFERENCE'S SHOWN ARE NOT TO SCALE.

PLS		
DRAWN		
CHECKED		
APPROVED		
CREW	POE	

POE & ASSOCIATES, OKLAHOMA CITY, OK
SURVEY DIVISION

SURVEY DATA SHEET

SWO 2323(11) PROJECT NO. 09032(17) SHEET NO. SD45

SECTION CORNER
ODOT# 0-55-97
SET SANDSTONE 14 X 12 X 3
G.L.O. NOTES APPROVED 09-23-1873
OKLAHOMA CERTIFIED CORNER RECORD DATED 07-30-2002
FOUND CHISELED X IN CONC
X=2150889.9611 Y= 148284.7529

1/4 SECTION CORNER
ODOT# 0-55-98
SET SANDSTONE 14 X 10 X 5
G.L.O. NOTES APPROVED 09-23-1873
OKLAHOMA CERTIFIED CORNER RECORD
DATED 08-30-2002
FOUND PK NAIL
X=2153543.9765 Y= 148296.8244

1/4 SECTION CORNER
ODOT# 0-55-99
SET SANDSTONE 15 X 13 X 4
G.L.O NOTES APPROVED 09-23-1873
OKLAHOMA CERTIFIED CORNER RECORD 07-30-2002
SET CHISELED X IN PAVEMENT FROM EXISTING REFERENCE POINTS
X=2150905.8228 Y= 145638.9775

CENTER 1/4 SECTION CORNER
ODOT# 0-55-1315
OKLAHOMA CERTIFIED CORNER RECORD 07-30-2002
FOUND IRON PIN UNDER CHAINLINK FENCE
X=2153554.6702 Y= 145654.2614

1/4 SECTION CORNER
ODOT# 0-55-1767
SET SANDSTONE 20 X 16 X 3
G.L.O NOTES APPROVED 09-23-1873
FOUND CHISELED X IN PAVEMENT
X=2156206.9662 Y= 145669.7401

SECTION CORNER
ODOT# 0-55-634
SET 16 X 12 X 5 SANDSTONE
FOUND 1/2" IRON PIN
X=2150921.6810 Y= 142997.2789

SECTION CORNER
ODOT# 0-55-628
SET 18 X 15 X 3 FOR CORNER
G.L.O NOTES DATED 09-23-1873
OKLAHOMA CERTIFIED CORNER RECORD 02-12-2001
FOUND 1/2" I.P.
X=2156217.6966 Y= 143034.9922

1/4 SECTION CORNER
ODOT# 0-55-627
SET SANDSTONE 14 X 12 X 3
G.L.O NOTES APPROVED 09-23-1873
OKLAHOMA CERTIFIED CORNER RECORD 07-30-2002.
FOUND ODOT BRASS CAP MON. NO. 0-55-100
X=2153569.9771 Y= 143016.2160

SCALE:
1" = 400'

NOTE: REFERENCE'S SHOWN ARE NOT TO SCALE.

PLS		POE & ASSOCIATES, OKLAHOMA CITY, OK SURVEY DIVISION
DRAWN		SURVEY DATA SHEET
CHECKED		
APPROVED		
CREW	POE	SWO 2923(11) PROJECT NO. 09032(17) SHEET NO. SDA6

SDS 46 OF 46

Area	
Cut	Fill

(CAUTION) THE LOCATION OF ALL UTILITIES AS SHOWN ARE APPROXIMATE. DUE TO RELOCATION'S PLANNED OR PRESENTLY UNDER CONSTRUCTION THERE ARE SOME UTILITIES THAT WILL BE RELOCATED AND NOT SHOWN ON THESE PLANS. THE CONTRACTOR SHALL BE RESPONSIBLE FOR ANY DAMAGE TO ALL UTILITIES.

DEPTH & LOCATION OF EXISTING UTILITIES SHALL BE FIELD VERIFIED BY THE CONTRACTOR PRIOR TO CONSTRUCTION.

Volume	
Cut	Fill

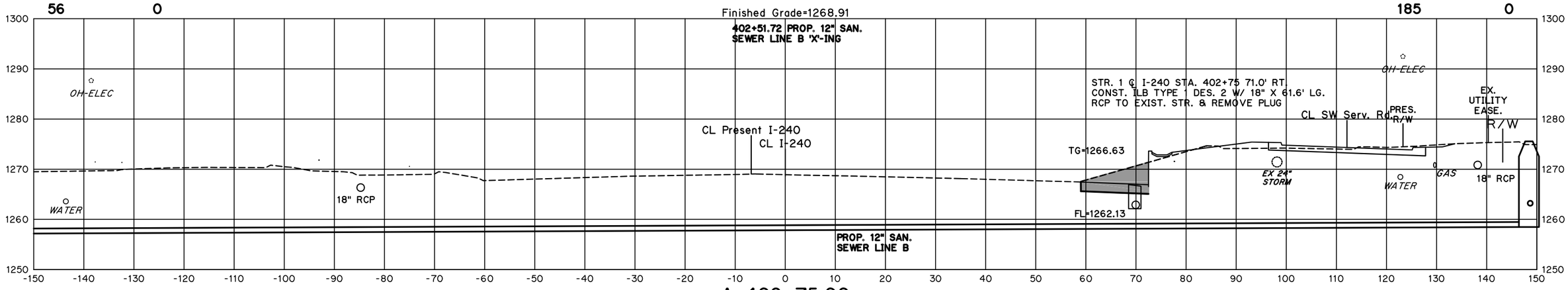

A 402+75.00

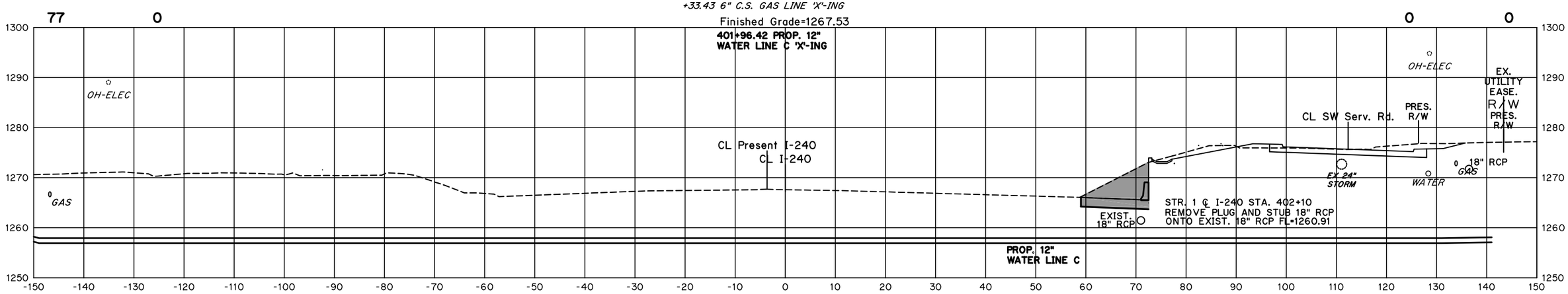

A 402+00.00
℄ I-240

I-240

I-35/I-240 INTERCHANGE

STATE JOB NO. 09032(17)

OKLAHOMA COUNTY SHEET NO. X1

SEPT 09, 2016 - 11:28:15
H:\PROJECTS\2789_CrossRoads_InterX_New\PHASE IA\Roadway\Drawings\XSections\XSEC-CL-I-240 PH1A.DWG

Area

Cut **Fill**

(CAUTION) THE LOCATION OF ALL UTILITIES AS SHOWN ARE APPROXIMATE. DUE TO RELOCATION'S PLANNED OR PRESENTLY UNDER CONSTRUCTION THERE ARE SOME UTILITIES THAT WILL BE RELOCATED AND NOT SHOWN ON THESE PLANS. THE CONTRACTOR SHALL BE RESPONSIBLE FOR ANY DAMAGE TO ALL UTILITIES.

DEPTH & LOCATION OF EXISTING UTILITIES SHALL BE FIELD VERIFIED BY THE CONTRACTOR PRIOR TO CONSTRUCTION.

Volume

Cut **Fill**

+10.48 6" C.S. GAS LINE 'X'-ING

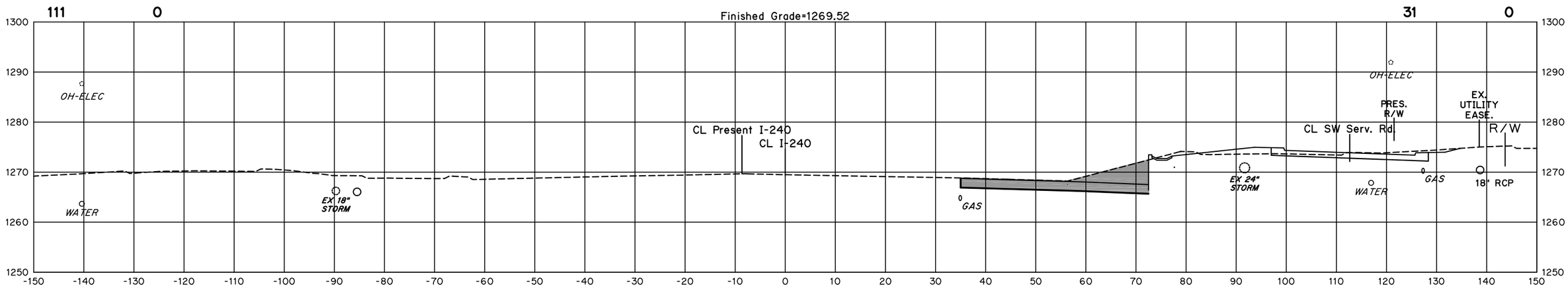

A 403+10.48

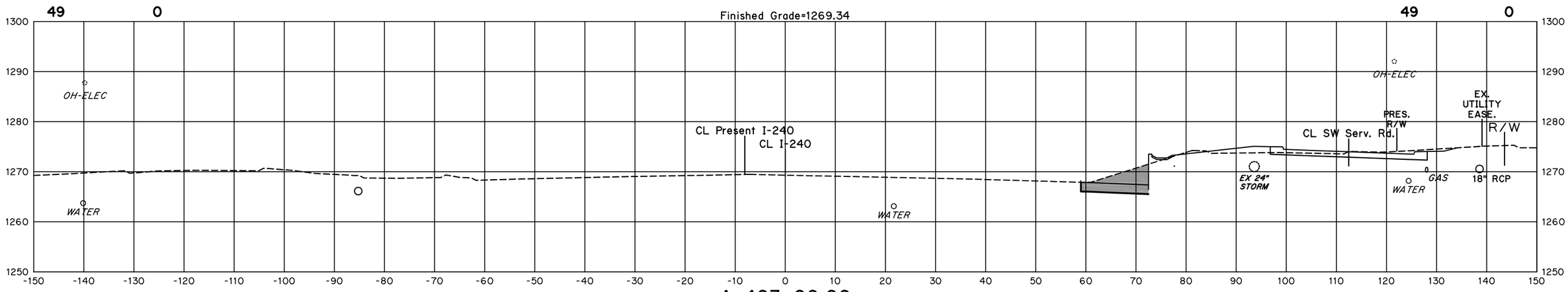

A 403+00.00

℄ I-240

I-240

I-35/I-240 INTERCHANGE

STATE JOB NO. 09032(17)

OKLAHOMA COUNTY SHEET NO. X2

SEPT 09, 2016 - 11:28:15
H:\PROJECTS\2789_CrossRoads_InterX_New\PHASE IA\Roadway\Drawings\XSections\XSEC-CL-I-240 PH1A.DWG

(CAUTION) THE LOCATION OF ALL UTILITIES AS SHOWN ARE APPROXIMATE. DUE TO RELOCATION'S PLANNED OR PRESENTLY UNDER CONSTRUCTION THERE ARE SOME UTILITIES THAT WILL BE RELOCATED AND NOT SHOWN ON THESE PLANS. THE CONTRACTOR SHALL BE RESPONSIBLE FOR ANY DAMAGE TO ALL UTILITIES.

DEPTH & LOCATION OF EXISTING UTILITIES SHALL BE FIELD VERIFIED BY THE CONTRACTOR PRIOR TO CONSTRUCTION.

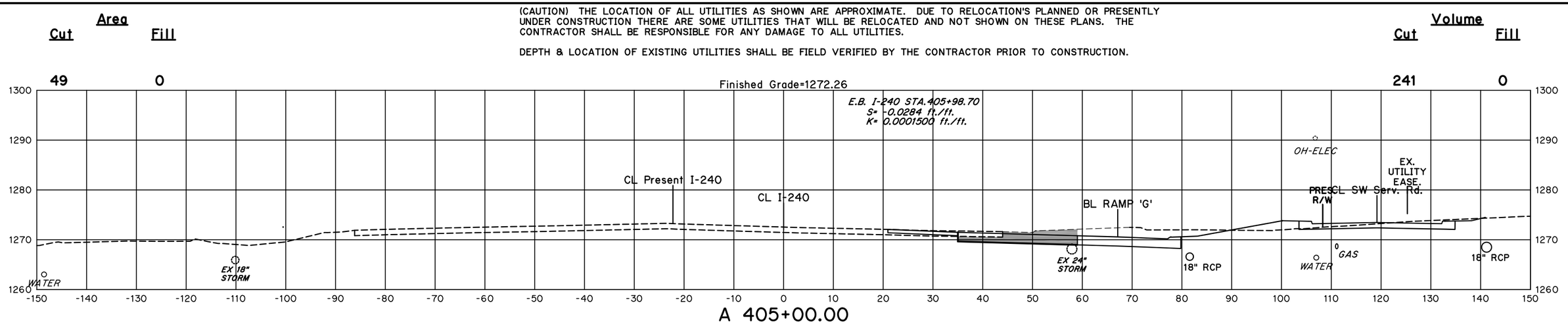

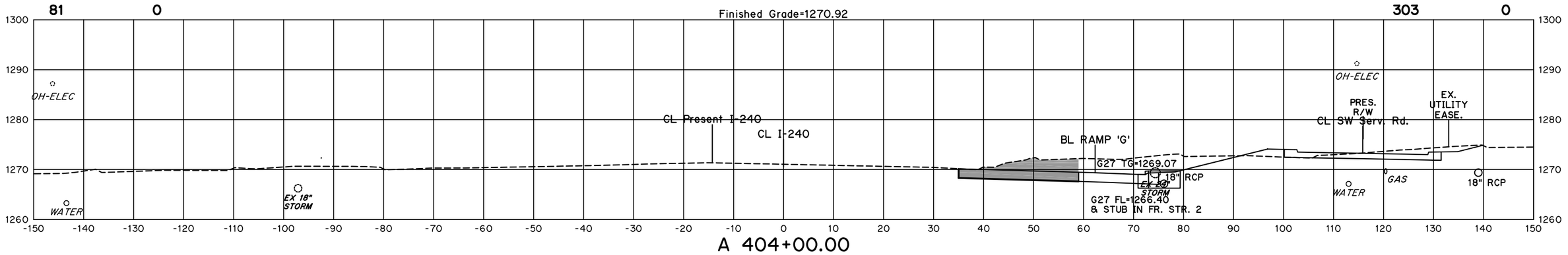

+17.87 8" SAN. SEWER LINE 'X'-ING

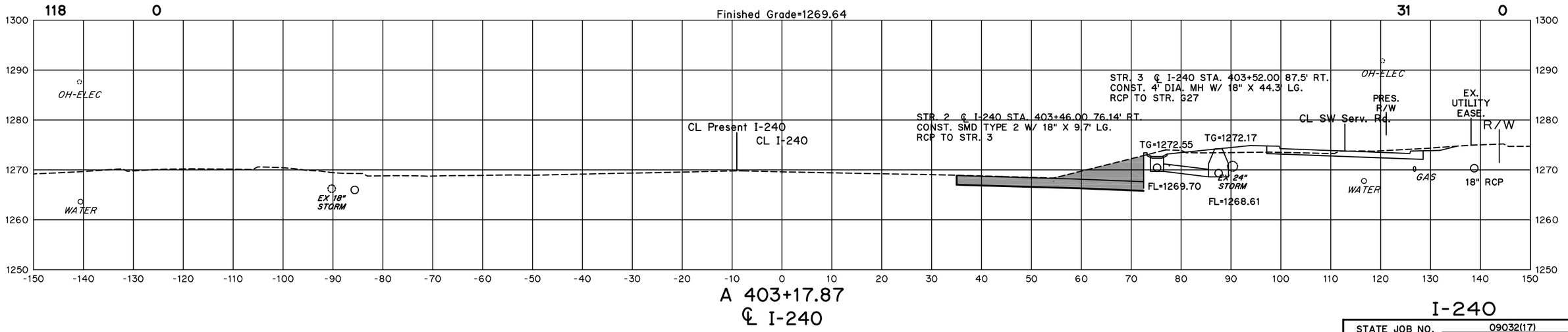

I-240

I-35/I-240 INTERCHANGE

STATE JOB NO. 09032(17)

OKLAHOMA COUNTY SHEET NO. X3

SEPT 09, 2016 - 11:28:15
H:\PROJECTS\2789_CrossRoads_InterX_New\PHASE IA\Roadway\Drawings\XSections\XSEC-CL-I-240 PH1A.DWG

(CAUTION) THE LOCATION OF ALL UTILITIES AS SHOWN ARE APPROXIMATE. DUE TO RELOCATION'S PLANNED OR PRESENTLY UNDER CONSTRUCTION THERE ARE SOME UTILITIES THAT WILL BE RELOCATED AND NOT SHOWN ON THESE PLANS. THE CONTRACTOR SHALL BE RESPONSIBLE FOR ANY DAMAGE TO ALL UTILITIES.

DEPTH & LOCATION OF EXISTING UTILITIES SHALL BE FIELD VERIFIED BY THE CONTRACTOR PRIOR TO CONSTRUCTION.

Area		Volume	
Cut	Fill	Cut	Fill
26	14	115	21

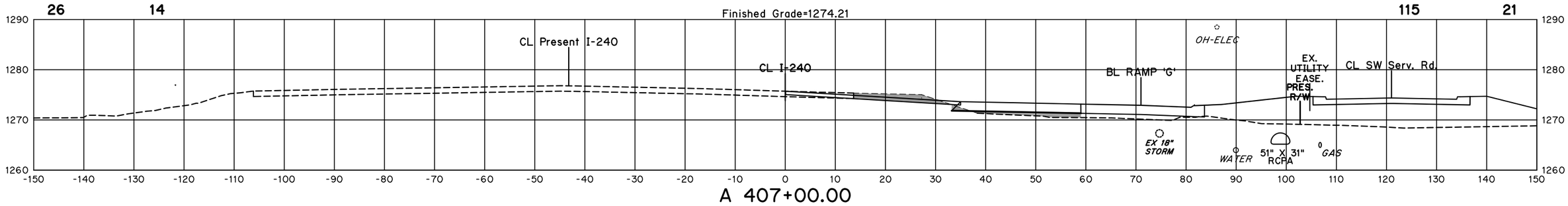

A 407+00.00

51	0	34	0

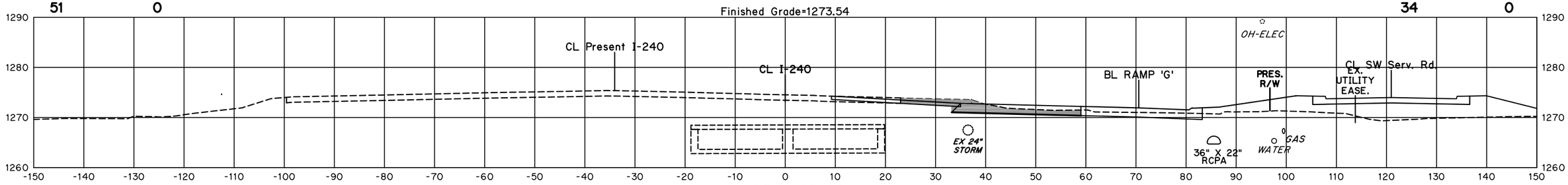

A 406+19.10

44	0	172	0

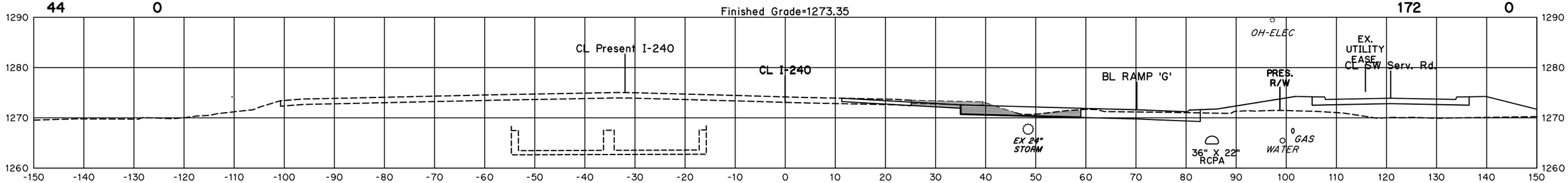

A 406+00.00
℄ I-240

I-240

I-35/I-240 INTERCHANGE

STATE JOB NO. 09032(17)

OKLAHOMA COUNTY SHEET NO. X4

SEPT 09, 2016 - 11:28:15
H:\PROJECTS\2789_CrossRoads_InterX_New\PHASE IA\Roadway\Drawings\XSections\XSEC-CL-I-240 PH1A.DWG

(CAUTION) THE LOCATION OF ALL UTILITIES AS SHOWN ARE APPROXIMATE. DUE TO RELOCATION'S PLANNED OR PRESENTLY UNDER CONSTRUCTION THERE ARE SOME UTILITIES THAT WILL BE RELOCATED AND NOT SHOWN ON THESE PLANS. THE CONTRACTOR SHALL BE RESPONSIBLE FOR ANY DAMAGE TO ALL UTILITIES.

DEPTH & LOCATION OF EXISTING UTILITIES SHALL BE FIELD VERIFIED BY THE CONTRACTOR PRIOR TO CONSTRUCTION.

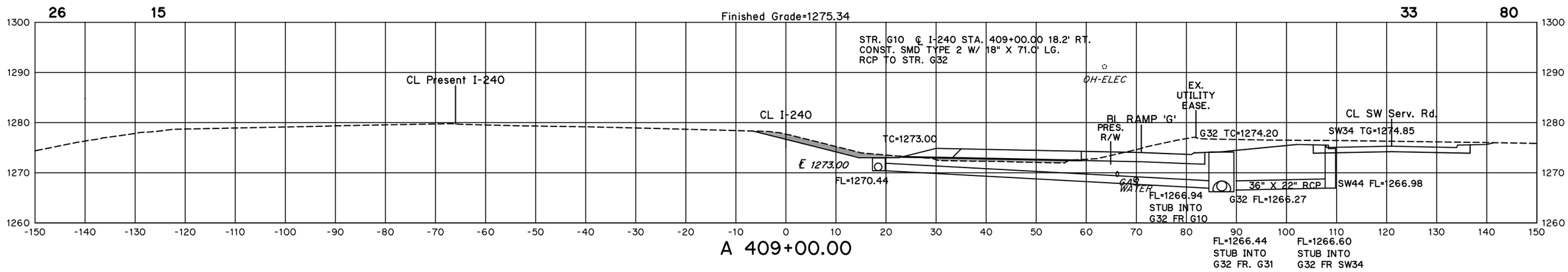

+32.11 PROP. SS LINE 'X'-ING

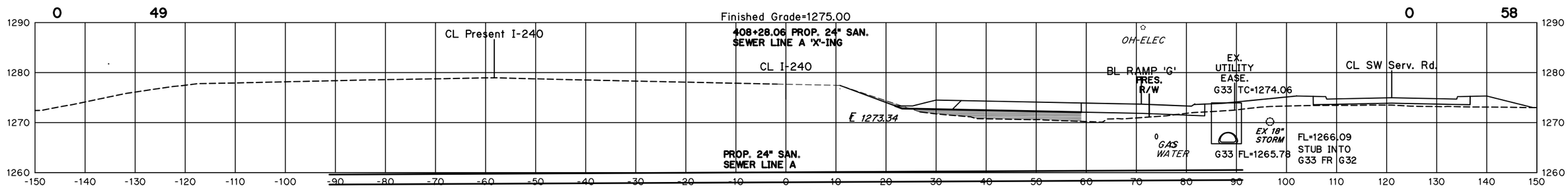

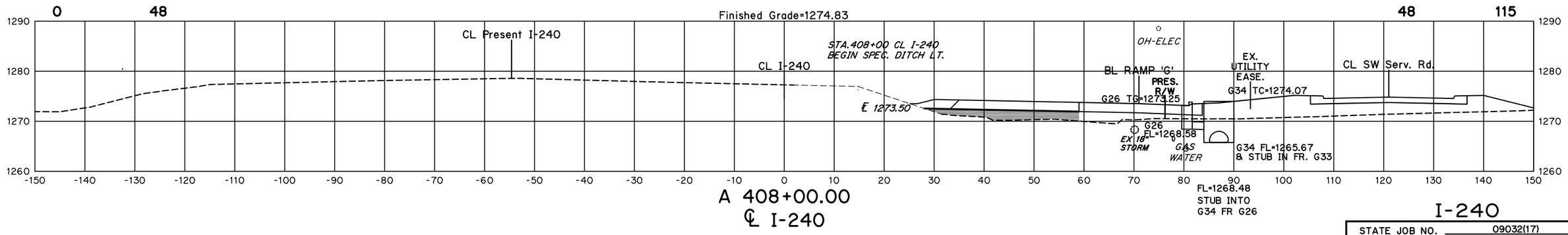

I-240

I-35/I-240 INTERCHANGE

STATE JOB NO. 09032(17)

OKLAHOMA COUNTY SHEET NO. X5

SEPT 09, 2016 - 11:28:15
H:\PROJECTS\2789_CrossRoads_InterX_New\PHASE IA\Roadway\Drawings\XSections\XSEC-CL-I-240 PH1A.DWG

Area	
Cut	Fill

(CAUTION) THE LOCATION OF ALL UTILITIES AS SHOWN ARE APPROXIMATE. DUE TO RELOCATION'S PLANNED OR PRESENTLY UNDER CONSTRUCTION THERE ARE SOME UTILITIES THAT WILL BE RELOCATED AND NOT SHOWN ON THESE PLANS. THE CONTRACTOR SHALL BE RESPONSIBLE FOR ANY DAMAGE TO ALL UTILITIES.

DEPTH & LOCATION OF EXISTING UTILITIES SHALL BE FIELD VERIFIED BY THE CONTRACTOR PRIOR TO CONSTRUCTION.

Volume	
Cut	Fill

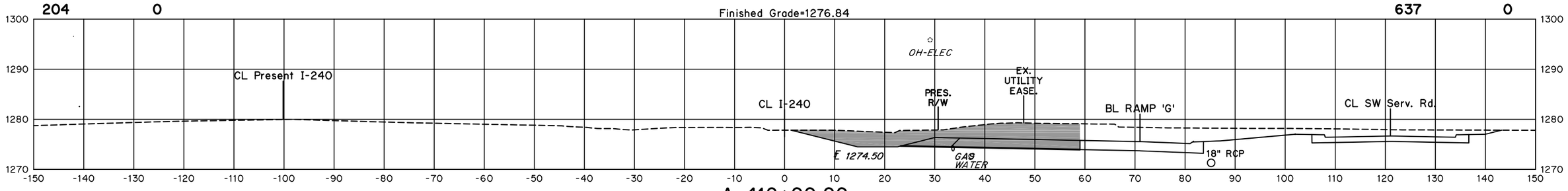

A 412+00.00

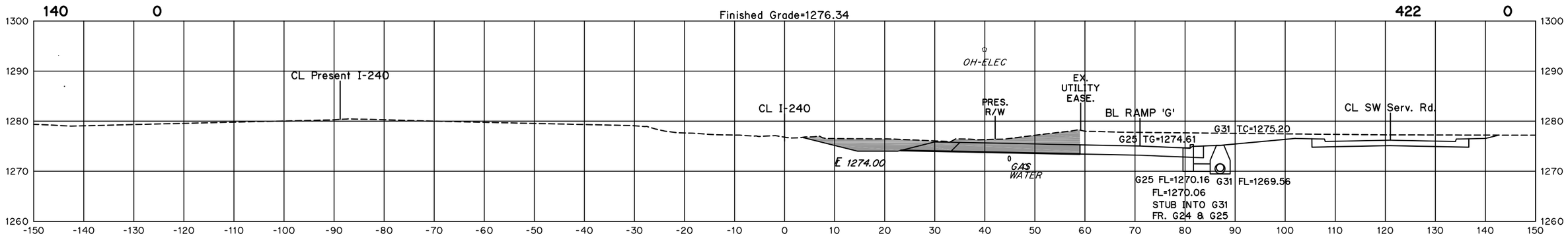

A 411+00.00

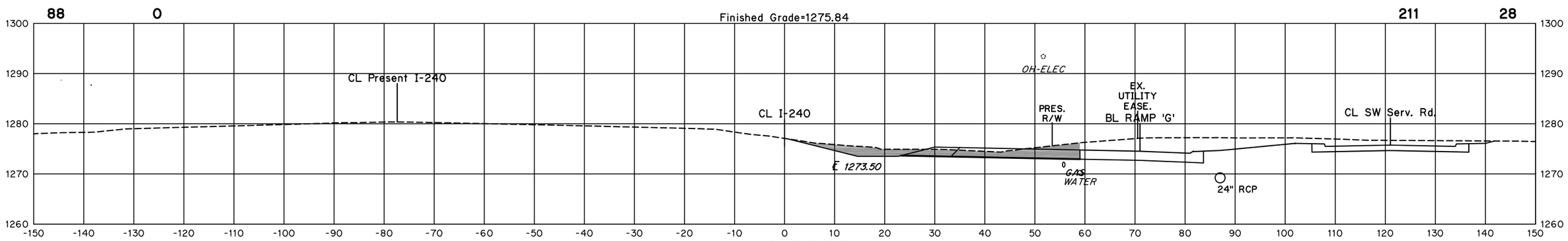

A 410+00.00

℄ I-240

I-240

I-35/I-240 INTERCHANGE

STATE JOB NO. 09032(17)

OKLAHOMA COUNTY SHEET NO. X6

SEPT 09, 2016 - 11:28:15
H:\PROJECTS\2789__CrossRoads__InterX__New\PHASE IA\Roadway\Drawings\XSections\XSEC-CL-I-240 PH1A.DWG

Area

Cut Fill

(CAUTION) THE LOCATION OF ALL UTILITIES AS SHOWN ARE APPROXIMATE. DUE TO RELOCATION'S PLANNED OR PRESENTLY UNDER CONSTRUCTION THERE ARE SOME UTILITIES THAT WILL BE RELOCATED AND NOT SHOWN ON THESE PLANS. THE CONTRACTOR SHALL BE RESPONSIBLE FOR ANY DAMAGE TO ALL UTILITIES.

DEPTH & LOCATION OF EXISTING UTILITIES SHALL BE FIELD VERIFIED BY THE CONTRACTOR PRIOR TO CONSTRUCTION.

Volume

Cut Fill

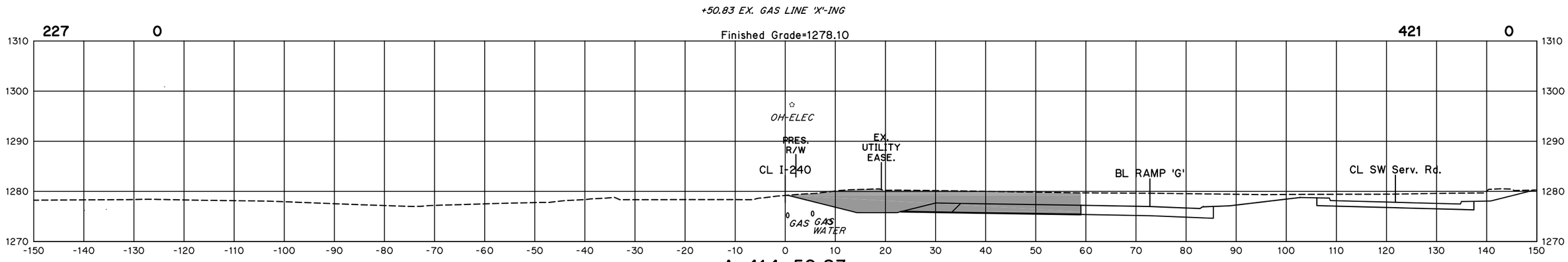

A 414+50.83

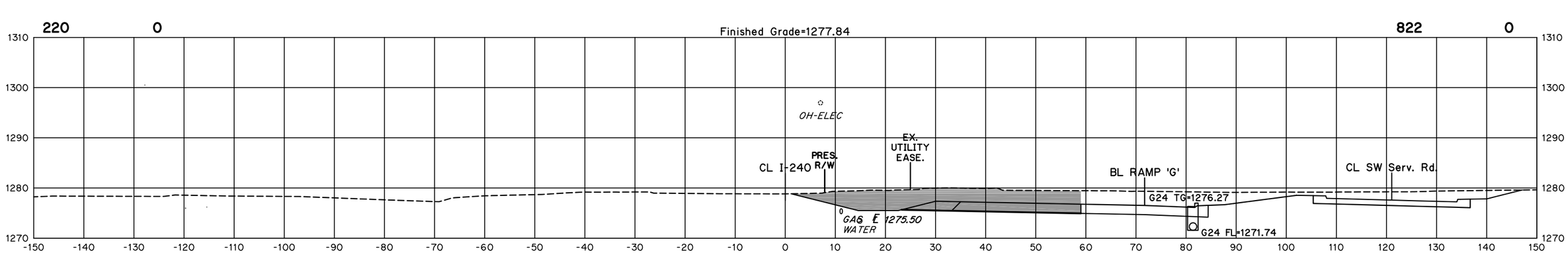

A 414+00.00

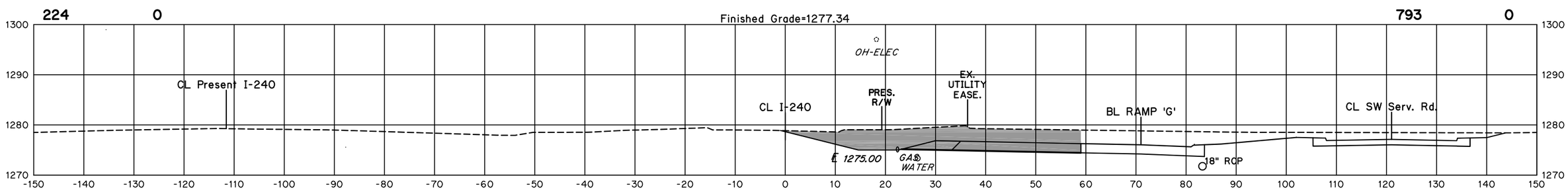

A 413+00.00

℄ I-240

I-240

I-35/I-240 INTERCHANGE

STATE JOB NO. 09032(17)

OKLAHOMA COUNTY SHEET NO. X7

SEPT 09, 2016 - 11:28:15
H:\PROJECTS\2789_CrossRoads_InterX_New\PHASE IA\Roadway\Drawings\XSections\XSEC-CL-I-240 PH1A.DWG

Area
Cut Fill

(CAUTION) THE LOCATION OF ALL UTILITIES AS SHOWN ARE APPROXIMATE. DUE TO RELOCATION'S PLANNED OR PRESENTLY UNDER CONSTRUCTION THERE ARE SOME UTILITIES THAT WILL BE RELOCATED AND NOT SHOWN ON THESE PLANS. THE CONTRACTOR SHALL BE RESPONSIBLE FOR ANY DAMAGE TO ALL UTILITIES.

DEPTH & LOCATION OF EXISTING UTILITIES SHALL BE FIELD VERIFIED BY THE CONTRACTOR PRIOR TO CONSTRUCTION.

Volume
Cut Fill

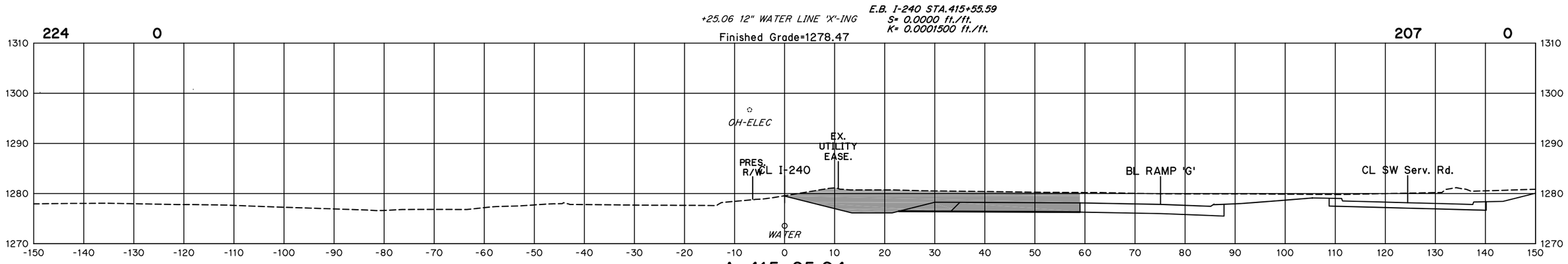

A 415+25.04

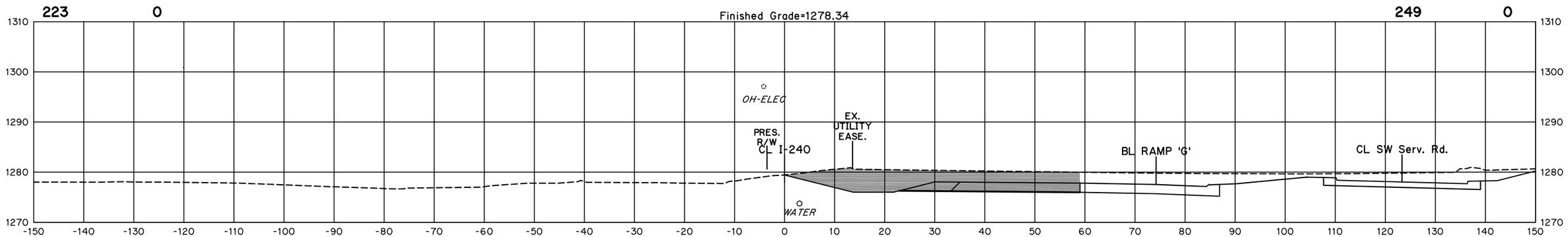

A 415+00.00

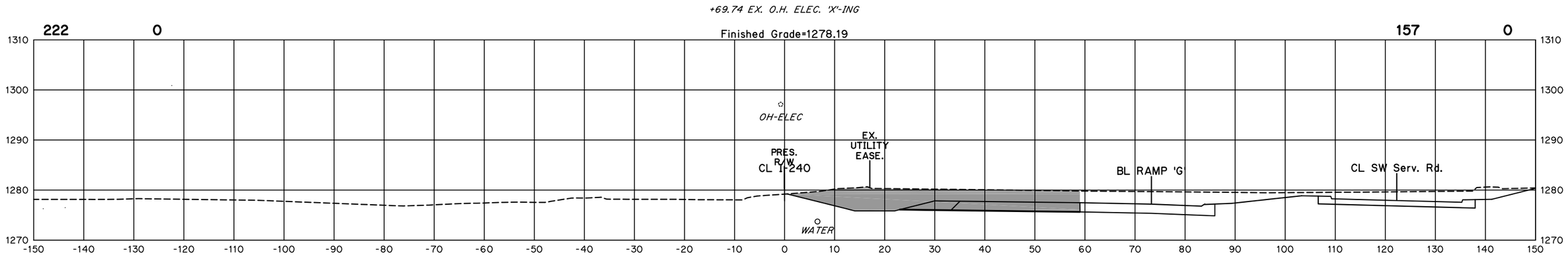

A 414+69.74
℄ I-240

I-240

I-35/I-240 INTERCHANGE

STATE JOB NO. 09032(17)
OKLAHOMA COUNTY SHEET NO. X8

SEPT 09, 2016 - 11:28:15
H:\PROJECTS\2789_CrossRoads_InterX_New\PHASE IA\Roadway\Drawings\XSections\XSEC-CL-I-240 PH1A.DWG

Area	
Cut	Fill

(CAUTION) THE LOCATION OF ALL UTILITIES AS SHOWN ARE APPROXIMATE. DUE TO RELOCATION'S PLANNED OR PRESENTLY UNDER CONSTRUCTION THERE ARE SOME UTILITIES THAT WILL BE RELOCATED AND NOT SHOWN ON THESE PLANS. THE CONTRACTOR SHALL BE RESPONSIBLE FOR ANY DAMAGE TO ALL UTILITIES.

DEPTH & LOCATION OF EXISTING UTILITIES SHALL BE FIELD VERIFIED BY THE CONTRACTOR PRIOR TO CONSTRUCTION.

Volume	
Cut	Fill

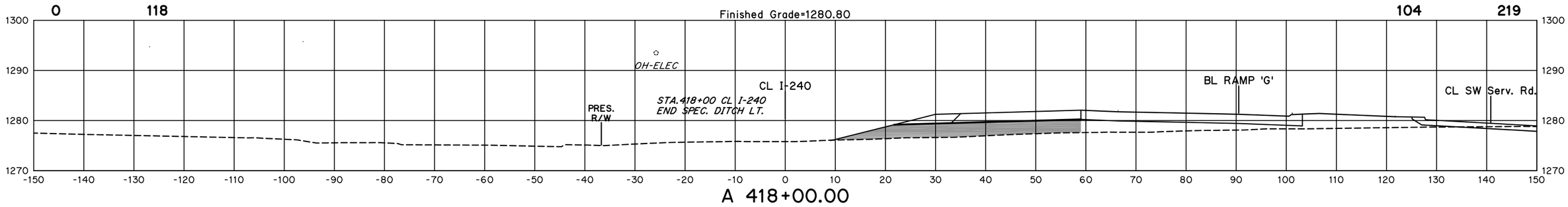

A 418+00.00

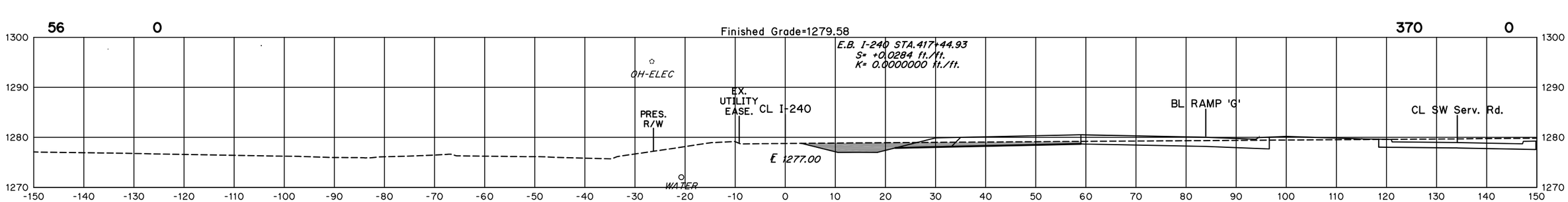

A 417+00.00

E.B. I-240 P.C. STA.416+97.59
S= +0.0213 ft./ft.
K= 0.0001500 ft./ft.
E.B. I-240 STA.416+88.93
S= +0.0200 ft./ft.
K= 0.0001500 ft./ft.

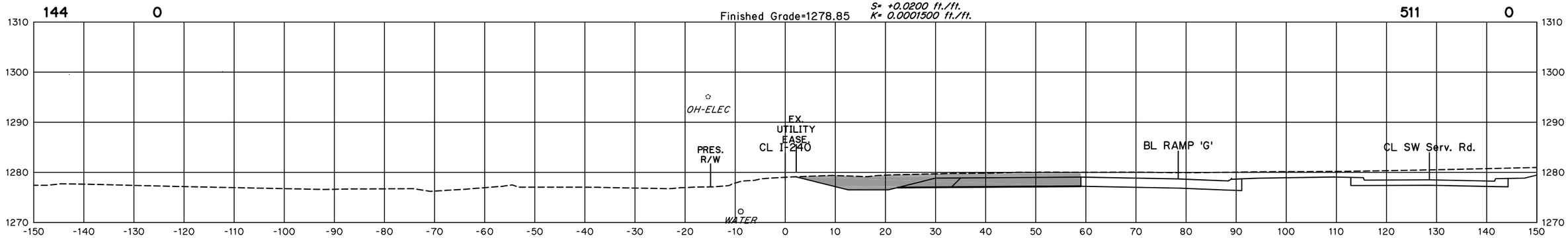

A 416+00.00

℄ I-240

I-240

I-35/I-240 INTERCHANGE

STATE JOB NO. 09032(17)

OKLAHOMA COUNTY SHEET NO. X9

SEPT 09, 2016 - 11:28:15
H:\PROJECTS\2789_CrossRoads_InterX_New\PHASE IA\Roadway\Drawings\XSections\XSEC-CL-I-240 PH1A.DWG

(CAUTION) THE LOCATION OF ALL UTILITIES AS SHOWN ARE APPROXIMATE. DUE TO RELOCATION'S PLANNED OR PRESENTLY UNDER CONSTRUCTION THERE ARE SOME UTILITIES THAT WILL BE RELOCATED AND NOT SHOWN ON THESE PLANS. THE CONTRACTOR SHALL BE RESPONSIBLE FOR ANY DAMAGE TO ALL UTILITIES.

DEPTH & LOCATION OF EXISTING UTILITIES SHALL BE FIELD VERIFIED BY THE CONTRACTOR PRIOR TO CONSTRUCTION.

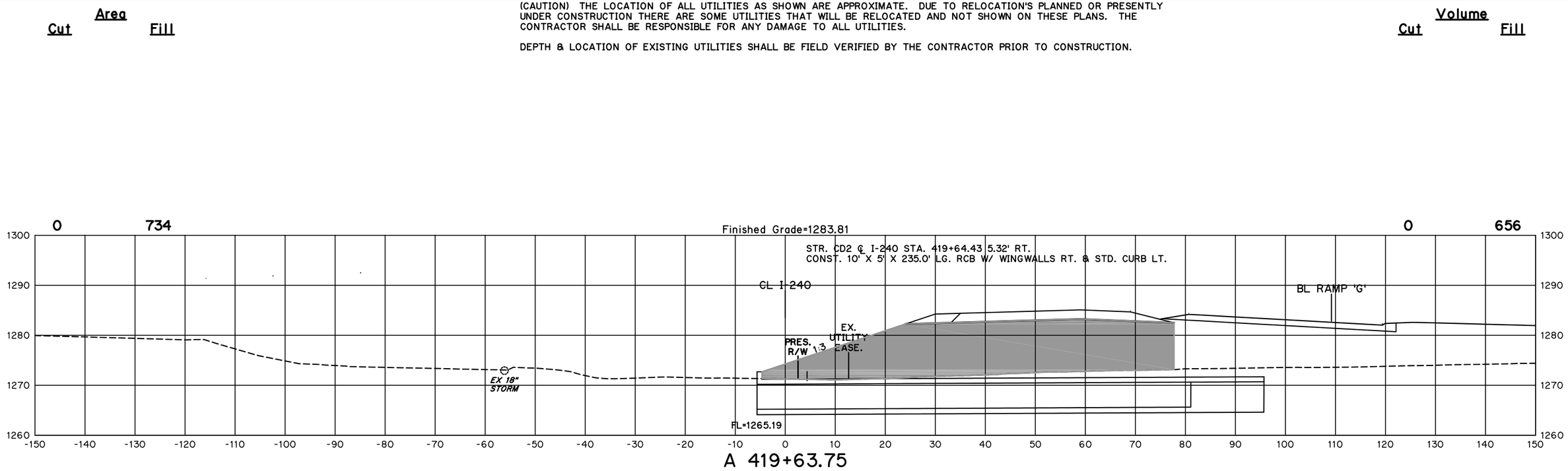

I-240

I-35/I-240 INTERCHANGE

STATE JOB NO. 09032(17)

OKLAHOMA COUNTY SHEET NO. X10

SEPT 09, 2016 - 11:28:15
H:\PROJECTS\2789_CrossRoads_InterX_New\PHASE IA\Roadway\Drawings\XSections\XSEC-CL-I-240 PH1A.DWG

Area	
Cut	Fill

(CAUTION) THE LOCATION OF ALL UTILITIES AS SHOWN ARE APPROXIMATE. DUE TO RELOCATION'S PLANNED OR PRESENTLY UNDER CONSTRUCTION THERE ARE SOME UTILITIES THAT WILL BE RELOCATED AND NOT SHOWN ON THESE PLANS. THE CONTRACTOR SHALL BE RESPONSIBLE FOR ANY DAMAGE TO ALL UTILITIES.

DEPTH & LOCATION OF EXISTING UTILITIES SHALL BE FIELD VERIFIED BY THE CONTRACTOR PRIOR TO CONSTRUCTION.

Volume	
Cut	Fill

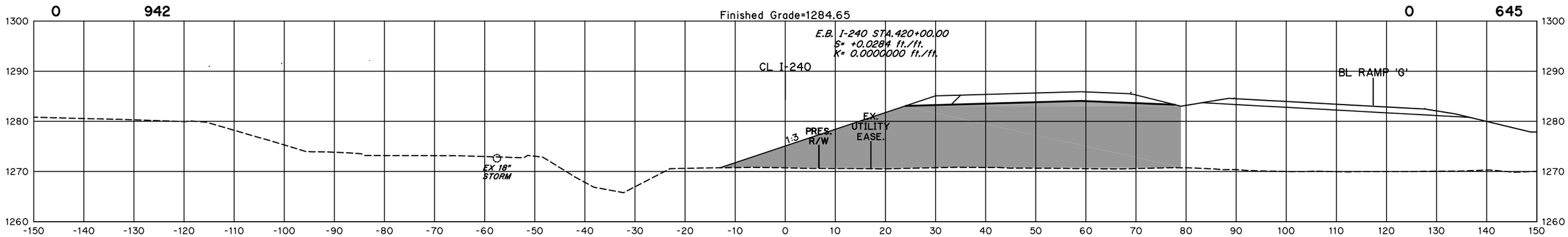

A 420+00.00

END PARTIAL CONSTRUCTION E.B. LANES

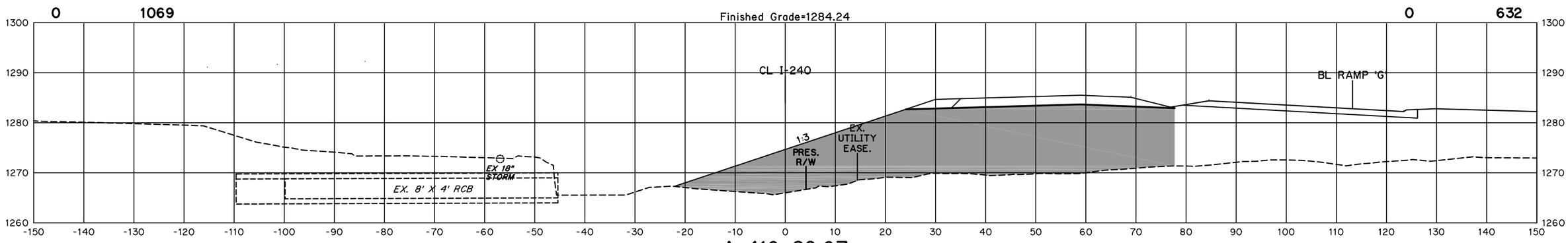

A 419+82.67

℄ I-240

I-240

I-35/I-240 INTERCHANGE

STATE JOB NO. 09032(17)

OKLAHOMA COUNTY SHEET NO. X11

SEPT 09, 2016 - 11:28:15
H:\PROJECTS\2789_CrossRoads_InterX_New\PHASE IA\Roadway\Drawings\XSections\XSEC-CL-I-240 PH1A.DWG

(CAUTION) THE LOCATION OF ALL UTILITIES AS SHOWN ARE APPROXIMATE. DUE TO RELOCATION'S PLANNED OR PRESENTLY UNDER CONSTRUCTION THERE ARE SOME UTILITIES THAT WILL BE RELOCATED AND NOT SHOWN ON THESE PLANS. THE CONTRACTOR SHALL BE RESPONSIBLE FOR ANY DAMAGE TO ALL UTILITIES.

DEPTH & LOCATION OF EXISTING UTILITIES SHALL BE FIELD VERIFIED BY THE CONTRACTOR PRIOR TO CONSTRUCTION.

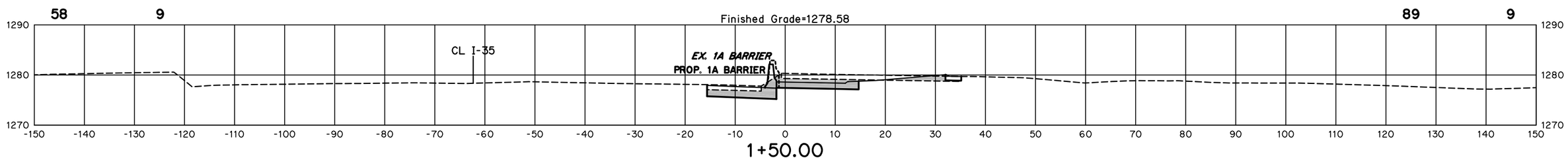

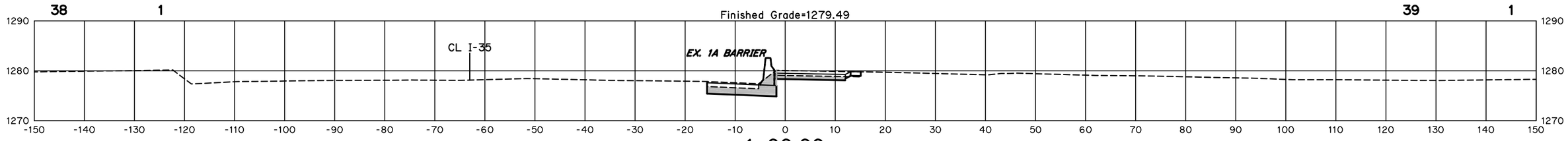

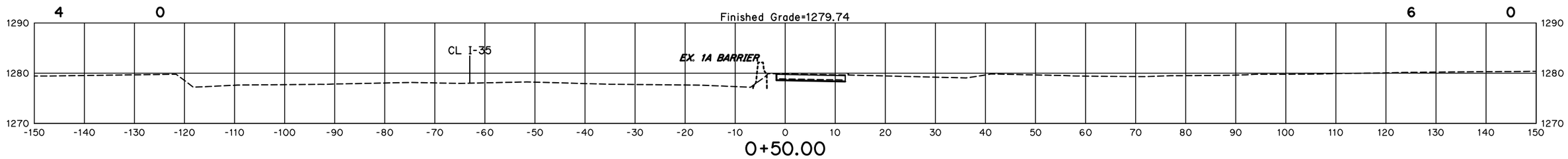

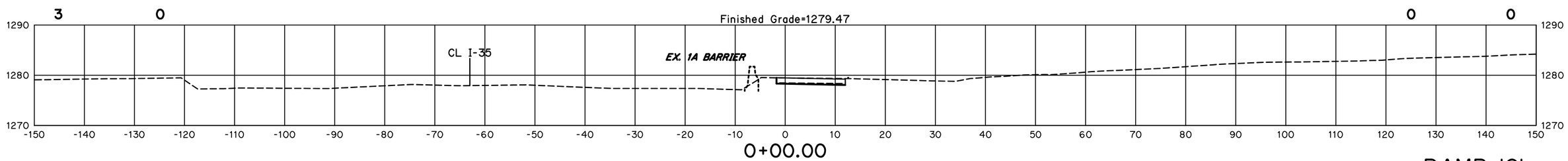

RAMP 'C' TEMP. CONN. BK.

RAMP 'C'

I-35/I-240 INTERCHANGE

STATE JOB NO. 09032(17)

OKLAHOMA COUNTY SHEET NO. X12

SEPT 13, 2016 - 15:34:51
H:\PROJECTS\2789_CrossRoads_InterX_New\PHASE IA\Roadway\Drawings\XSections\XSEC-BL-RAMP C.DWG

Area

Cut Fill

(CAUTION) THE LOCATION OF ALL UTILITIES AS SHOWN ARE APPROXIMATE. DUE TO RELOCATION'S PLANNED OR PRESENTLY UNDER CONSTRUCTION THERE ARE SOME UTILITIES THAT WILL BE RELOCATED AND NOT SHOWN ON THESE PLANS. THE CONTRACTOR SHALL BE RESPONSIBLE FOR ANY DAMAGE TO ALL UTILITIES.

DEPTH & LOCATION OF EXISTING UTILITIES SHALL BE FIELD VERIFIED BY THE CONTRACTOR PRIOR TO CONSTRUCTION.

Volume

Cut Fill

159 0

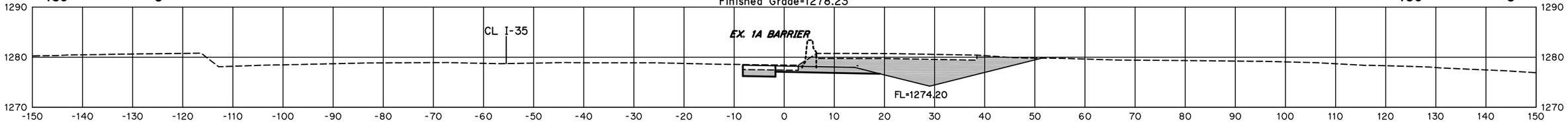

2+36.38

189 0

121 0

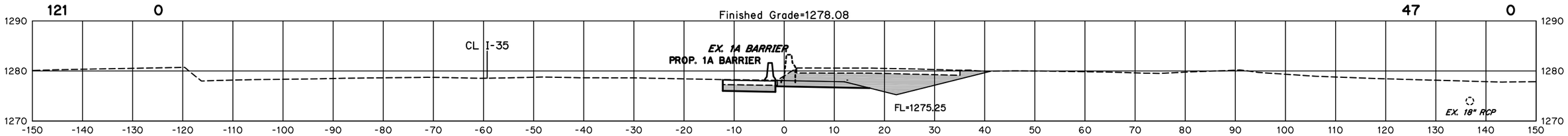

2+00.00

47 0

118 2

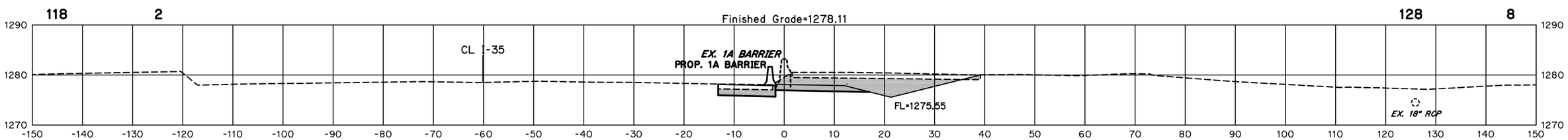

1+89.40

128 8

RAMP 'C' TEMP. CONN. BK.

STA. 1+75.00
BEGIN SPEC. DITCH RT.
FL=1275.97

RAMP 'C'

I-35/I-240 INTERCHANGE

STATE JOB NO. 09032(17)

OKLAHOMA COUNTY SHEET NO. X13

SEPT 13, 2016 - 15:34:51
H:\PROJECTS\2789_CrossRoads_InterX_New\PHASE IA\Roadway\Drawings\XSections\XSEC-BL-RAMP C.DWG

(CAUTION) THE LOCATION OF ALL UTILITIES AS SHOWN ARE APPROXIMATE. DUE TO RELOCATION'S PLANNED OR PRESENTLY UNDER CONSTRUCTION THERE ARE SOME UTILITIES THAT WILL BE RELOCATED AND NOT SHOWN ON THESE PLANS. THE CONTRACTOR SHALL BE RESPONSIBLE FOR ANY DAMAGE TO ALL UTILITIES.

DEPTH & LOCATION OF EXISTING UTILITIES SHALL BE FIELD VERIFIED BY THE CONTRACTOR PRIOR TO CONSTRUCTION.

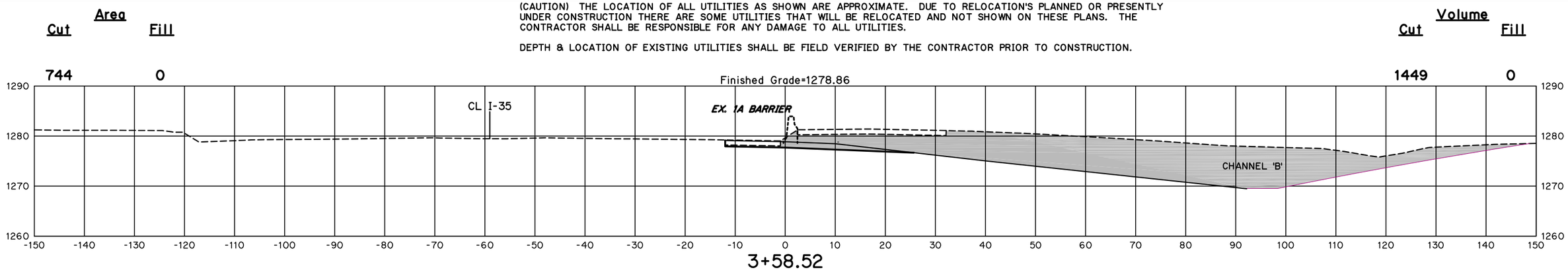

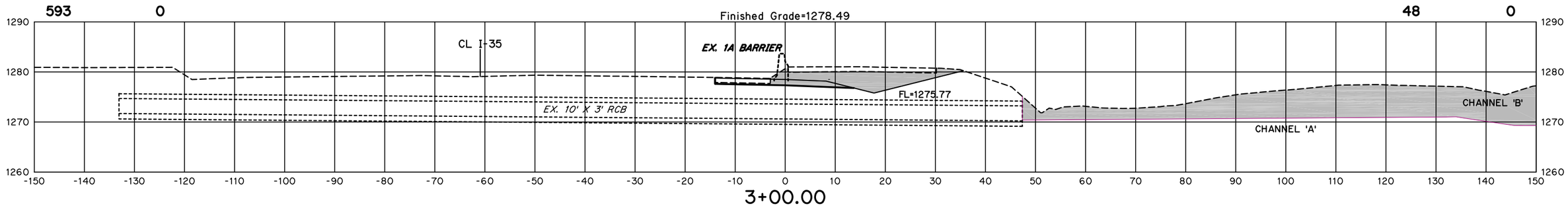

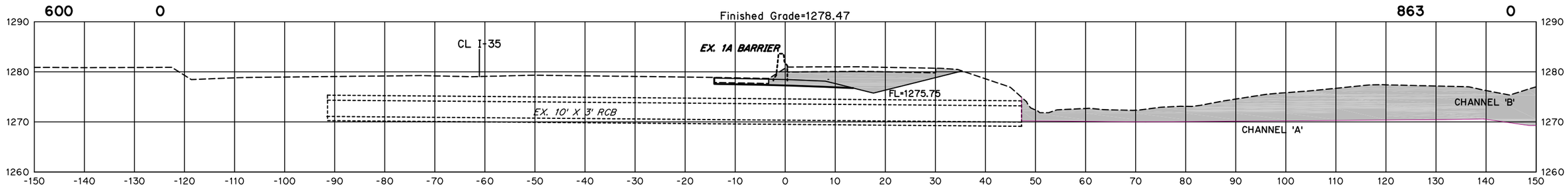

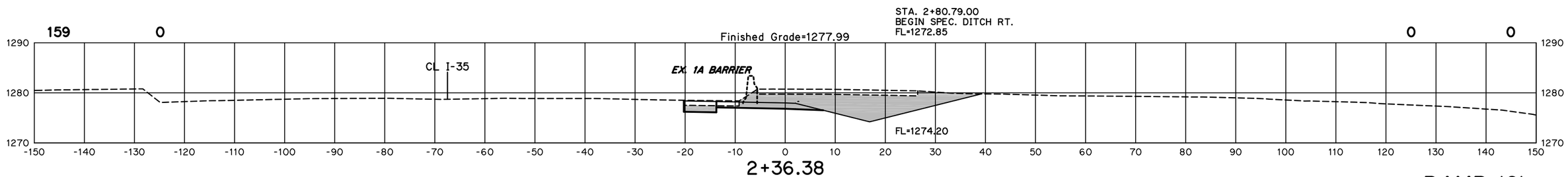

RAMP 'C' TEMP. CONN. AHD.

RAMP 'C'

I-35/I-240 INTERCHANGE

STATE JOB NO. 09032(17)

OKLAHOMA COUNTY SHEET NO. X14

SEPT 13, 2016 - 15:34:51
H:\PROJECTS\2789_CrossRoads_InterX_New\PHASE IA\Roadway\Drawings\XSections\XSEC-BL-RAMP C.DWG

(CAUTION) THE LOCATION OF ALL UTILITIES AS SHOWN ARE APPROXIMATE. DUE TO RELOCATION'S PLANNED OR PRESENTLY UNDER CONSTRUCTION THERE ARE SOME UTILITIES THAT WILL BE RELOCATED AND NOT SHOWN ON THESE PLANS. THE CONTRACTOR SHALL BE RESPONSIBLE FOR ANY DAMAGE TO ALL UTILITIES.

DEPTH & LOCATION OF EXISTING UTILITIES SHALL BE FIELD VERIFIED BY THE CONTRACTOR PRIOR TO CONSTRUCTION.

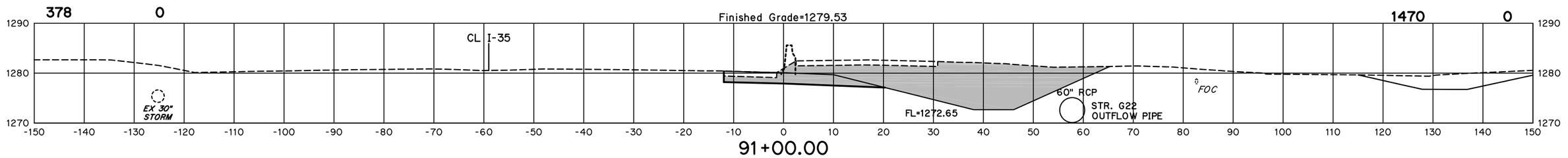

91+00.00

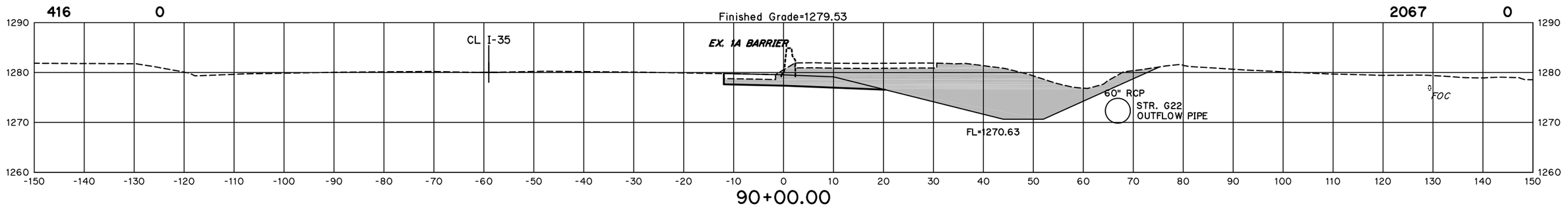

90+00.00

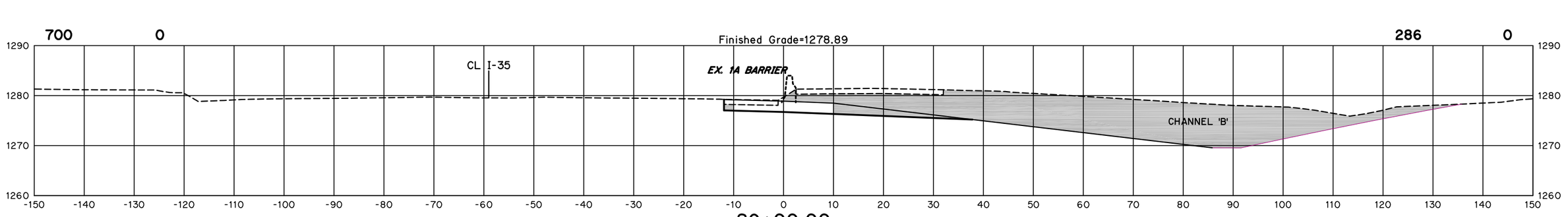

89+00.00

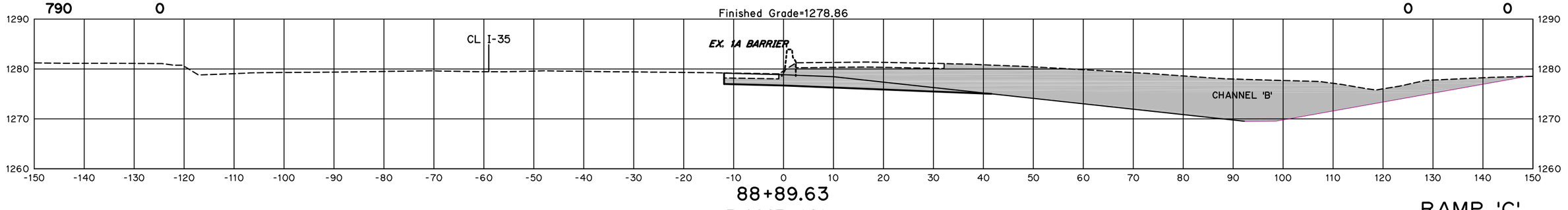

88+89.63

RAMP 'C'

RAMP 'C'

I-35/I-240 INTERCHANGE

STATE JOB NO. 09032(17)

OKLAHOMA COUNTY SHEET NO. X15

SEPT 13, 2016 - 15:34:51
H:\PROJECTS\2789_CrossRoads_InterX_New\PHASE IA\Roadway\Drawings\XSections\XSEC-BL-RAMP C.DWG

(CAUTION) THE LOCATION OF ALL UTILITIES AS SHOWN ARE APPROXIMATE. DUE TO RELOCATION'S PLANNED OR PRESENTLY UNDER CONSTRUCTION THERE ARE SOME UTILITIES THAT WILL BE RELOCATED AND NOT SHOWN ON THESE PLANS. THE CONTRACTOR SHALL BE RESPONSIBLE FOR ANY DAMAGE TO ALL UTILITIES.

DEPTH & LOCATION OF EXISTING UTILITIES SHALL BE FIELD VERIFIED BY THE CONTRACTOR PRIOR TO CONSTRUCTION.

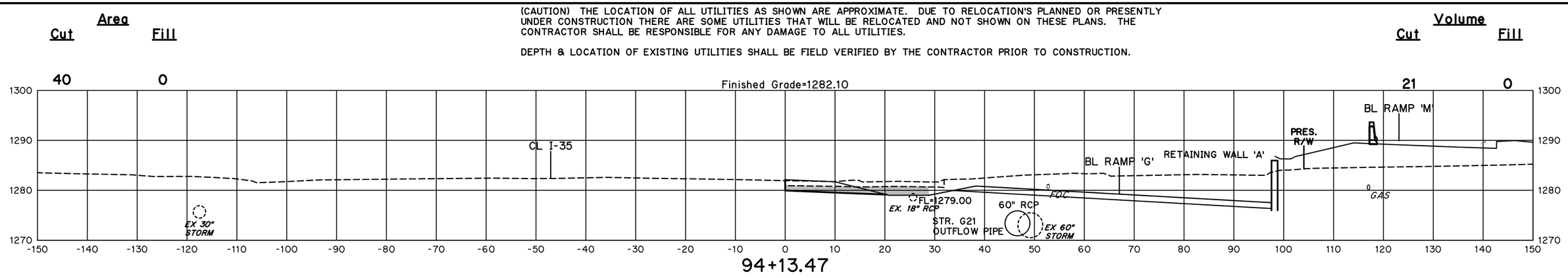

RAMP 'C'

I-35/I-240 INTERCHANGE

STATE JOB NO. 09032(17)

OKLAHOMA COUNTY SHEET NO. X16

SEPT 13, 2016 - 15:34:51
H:\PROJECTS\2789_CrossRoads_InterX_New\PHASE IA\Roadway\Drawings\XSections\XSEC-BL-RAMP C.DWG

Area		Volume	
Cut	Fill	Cut	Fill

(CAUTION) THE LOCATION OF ALL UTILITIES AS SHOWN ARE APPROXIMATE. DUE TO RELOCATION'S PLANNED OR PRESENTLY UNDER CONSTRUCTION THERE ARE SOME UTILITIES THAT WILL BE RELOCATED AND NOT SHOWN ON THESE PLANS. THE CONTRACTOR SHALL BE RESPONSIBLE FOR ANY DAMAGE TO ALL UTILITIES.

DEPTH & LOCATION OF EXISTING UTILITIES SHALL BE FIELD VERIFIED BY THE CONTRACTOR PRIOR TO CONSTRUCTION.

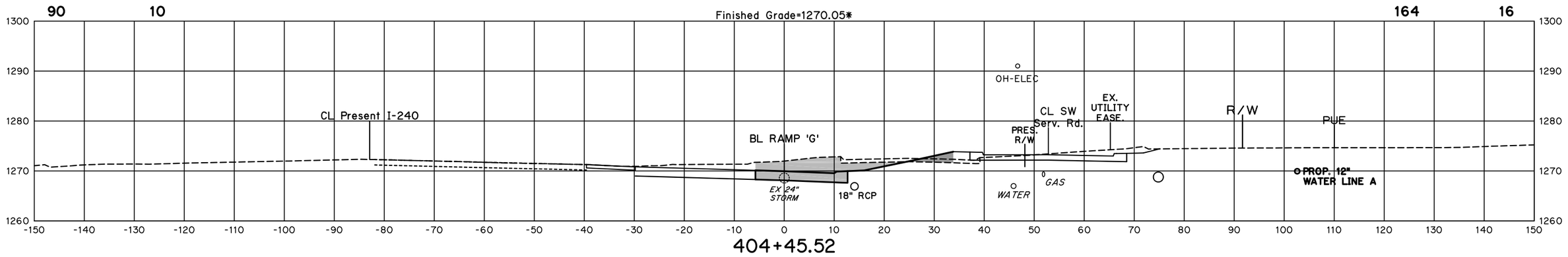

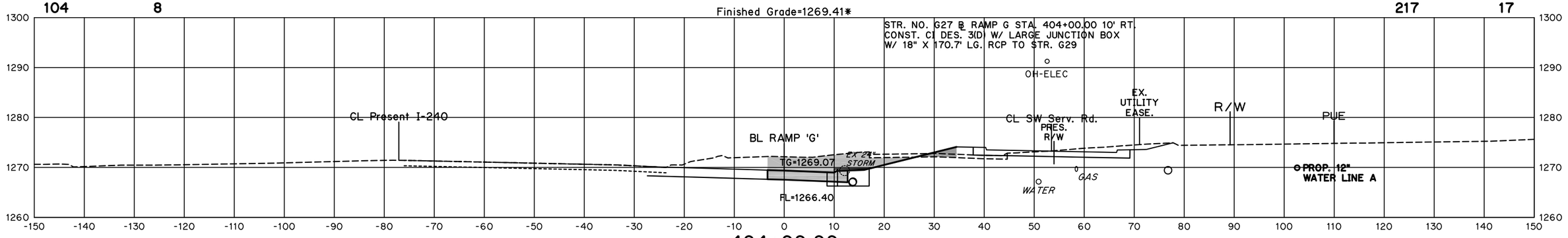

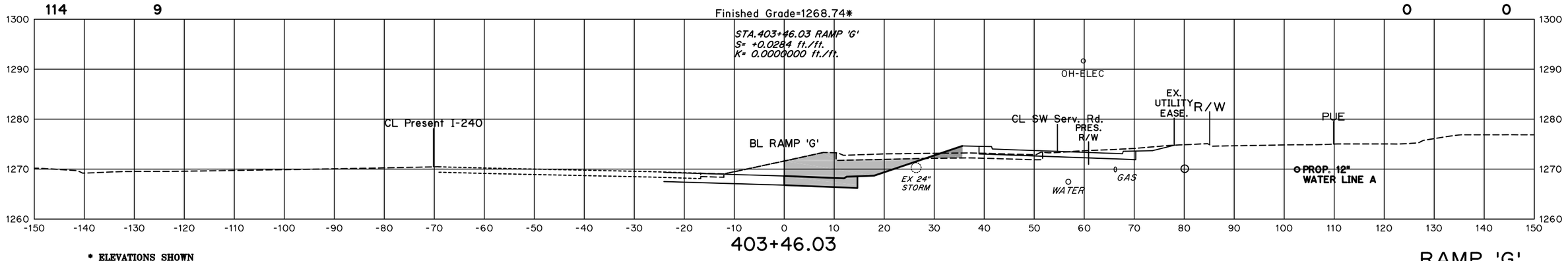

*** ELEVATIONS SHOWN ARE TOP OF FUTURE PERMEABLE FRICTION COURSE**

RAMP 'G'

I-35/I-240 INTERCHANGE

STATE JOB NO. 09032(17)

OKLAHOMA COUNTY SHEET NO. X17

SEPT 13, 2016 - 15:17:09
H:\PROJECTS\2789_CrossRoads_InterX_New\PHASE IA\Roadway\Drawings\XSections\XSEC-BL-RAMP G.DWG

Area		Volume	
Cut	Fill	Cut	Fill

(CAUTION) THE LOCATION OF ALL UTILITIES AS SHOWN ARE APPROXIMATE. DUE TO RELOCATION'S PLANNED OR PRESENTLY UNDER CONSTRUCTION THERE ARE SOME UTILITIES THAT WILL BE RELOCATED AND NOT SHOWN ON THESE PLANS. THE CONTRACTOR SHALL BE RESPONSIBLE FOR ANY DAMAGE TO ALL UTILITIES.

DEPTH & LOCATION OF EXISTING UTILITIES SHALL BE FIELD VERIFIED BY THE CONTRACTOR PRIOR TO CONSTRUCTION.

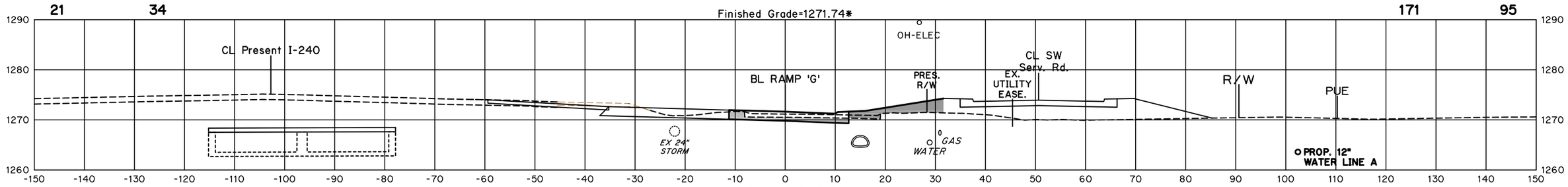

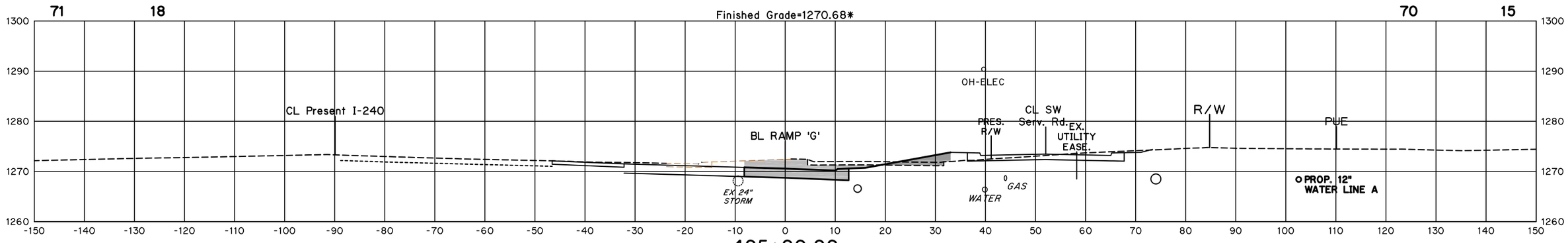

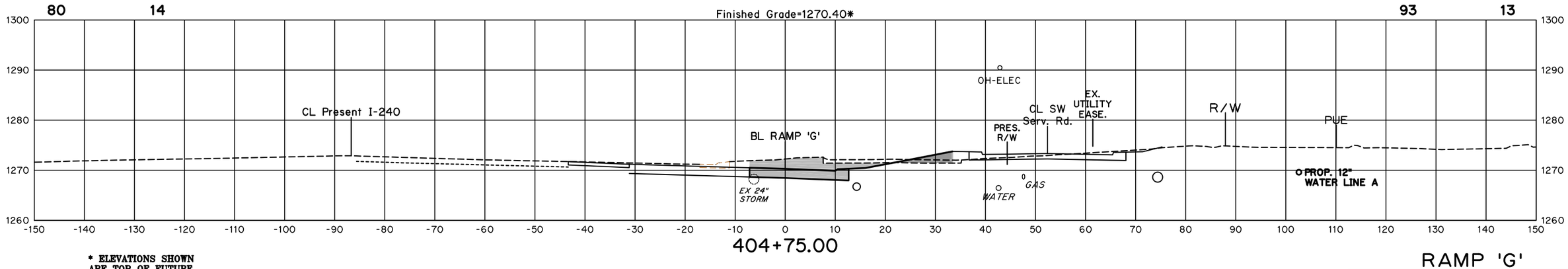

*** ELEVATIONS SHOWN ARE TOP OF FUTURE PERMEABLE FRICTION COURSE**

RAMP 'G'

I-35/I-240 INTERCHANGE

STATE JOB NO. 09032(17)

OKLAHOMA COUNTY SHEET NO. X18

SEPT 13, 2016 - 15:17:09
H:\PROJECTS\2789_CrossRoads_InterX_New\PHASE IA\Roadway\Drawings\XSections\XSEC-BL-RAMP G.DWG

Area		Volume	
Cut	Fill	Cut	Fill

(CAUTION) THE LOCATION OF ALL UTILITIES AS SHOWN ARE APPROXIMATE. DUE TO RELOCATION'S PLANNED OR PRESENTLY UNDER CONSTRUCTION THERE ARE SOME UTILITIES THAT WILL BE RELOCATED AND NOT SHOWN ON THESE PLANS. THE CONTRACTOR SHALL BE RESPONSIBLE FOR ANY DAMAGE TO ALL UTILITIES.

DEPTH & LOCATION OF EXISTING UTILITIES SHALL BE FIELD VERIFIED BY THE CONTRACTOR PRIOR TO CONSTRUCTION.

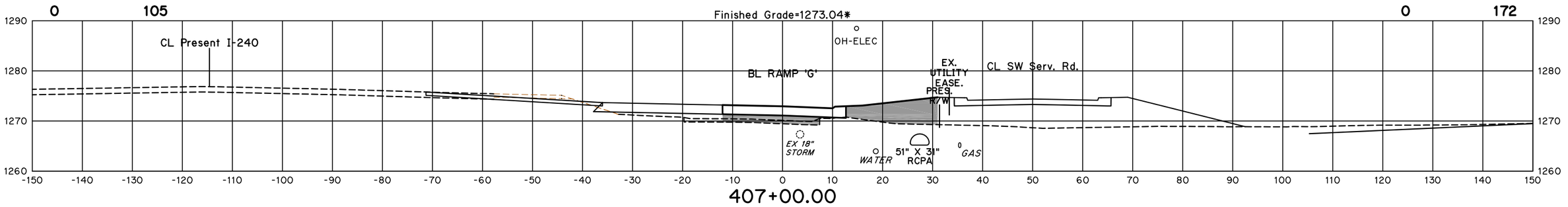

407+00.00

FL=1265.05
STUB INTO CD1 FR. G34

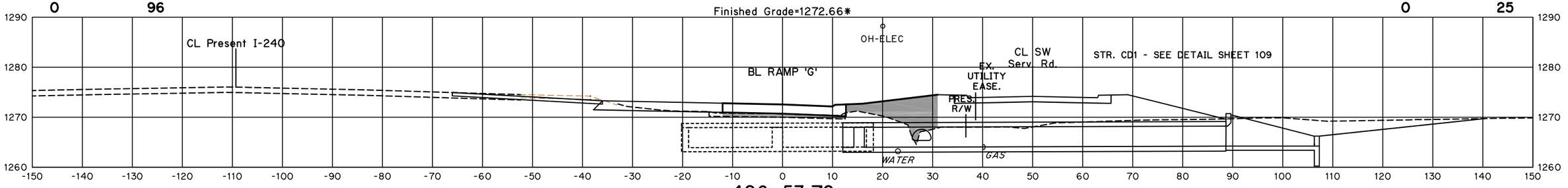

406+53.72

STA.406+51.51 RAMP 'G'
S= +0.0200 ft./ft.
K= 0.0000000 ft./ft.

FL=1265.46
STUB RCPA FROM G30
INTO EXIST. 2-8' X 4' RCB

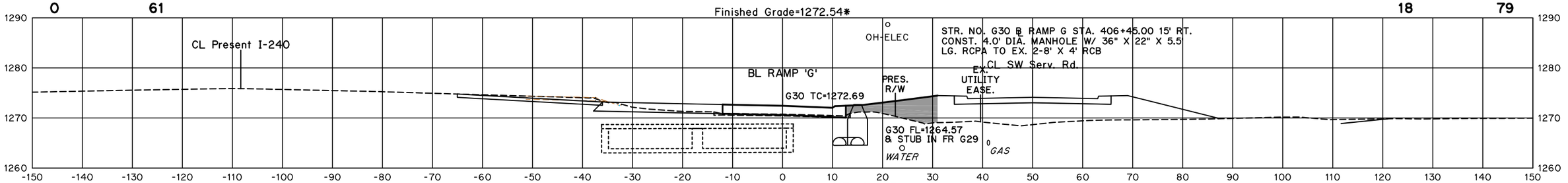

406+45.00

FL=1264.47
STUB INTO EXIST.
2-8'X4' RCB FR. G30

*** ELEVATIONS SHOWN ARE TOP OF FUTURE PERMEABLE FRICTION COURSE**

RAMP 'G'

I-35/I-240 INTERCHANGE

STATE JOB NO. 09032(17)
OKLAHOMA COUNTY SHEET NO. X19

SEPT 13, 2016 - 15:17:09
H:\PROJECTS\2789_CrossRoads_InterX_New\PHASE IA\Roadway\Drawings\XSections\XSEC-BL-RAMP G.DWG

(CAUTION) THE LOCATION OF ALL UTILITIES AS SHOWN ARE APPROXIMATE. DUE TO RELOCATION'S PLANNED OR PRESENTLY UNDER CONSTRUCTION THERE ARE SOME UTILITIES THAT WILL BE RELOCATED AND NOT SHOWN ON THESE PLANS. THE CONTRACTOR SHALL BE RESPONSIBLE FOR ANY DAMAGE TO ALL UTILITIES.

DEPTH & LOCATION OF EXISTING UTILITIES SHALL BE FIELD VERIFIED BY THE CONTRACTOR PRIOR TO CONSTRUCTION.

Area		Volume	
Cut	Fill	Cut	Fill
2	60	1	83
0	109	0	128
0	101	0	257

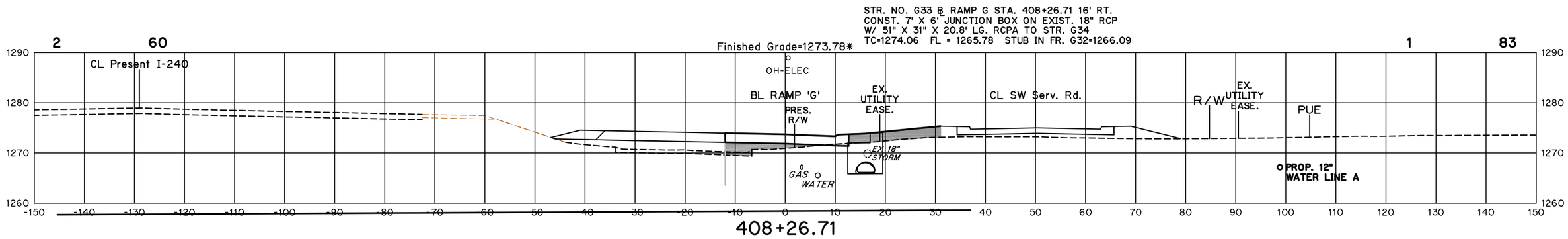

*53.85 6" C.S. GAS LINE 'X'-ING

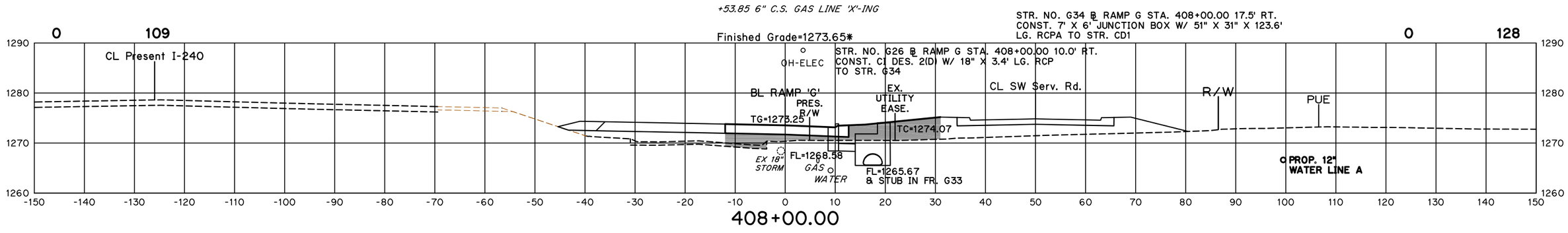

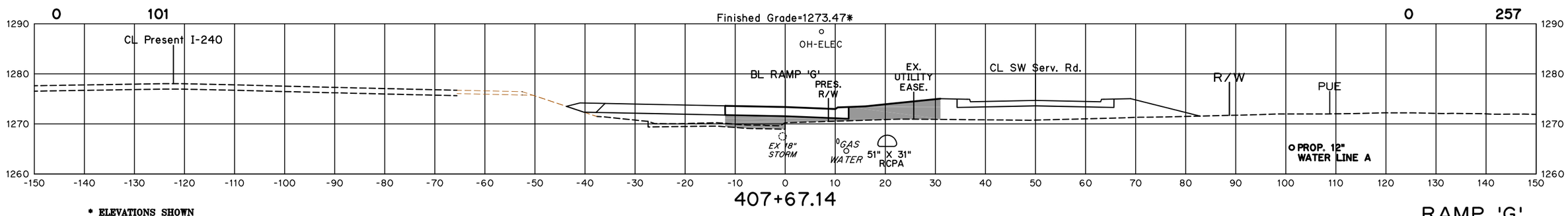

*** ELEVATIONS SHOWN ARE TOP OF FUTURE PERMEABLE FRICTION COURSE**

RAMP 'G'

I-35/I-240 INTERCHANGE

STATE JOB NO. 09032(17)

OKLAHOMA COUNTY SHEET NO. X20

SEPT 13, 2016 - 15:17:09
H:\PROJECTS\2789_CrossRoads_InterX_New\PHASE IA\Roadway\Drawings\XSections\XSEC-BL-RAMP G.DWG

Area	
Cut	Fill

(CAUTION) THE LOCATION OF ALL UTILITIES AS SHOWN ARE APPROXIMATE. DUE TO RELOCATION'S PLANNED OR PRESENTLY UNDER CONSTRUCTION THERE ARE SOME UTILITIES THAT WILL BE RELOCATED AND NOT SHOWN ON THESE PLANS. THE CONTRACTOR SHALL BE RESPONSIBLE FOR ANY DAMAGE TO ALL UTILITIES.

DEPTH & LOCATION OF EXISTING UTILITIES SHALL BE FIELD VERIFIED BY THE CONTRACTOR PRIOR TO CONSTRUCTION.

Volume	
Cut	Fill

+53.71 6" C.S. GAS LINE 'X'-ING

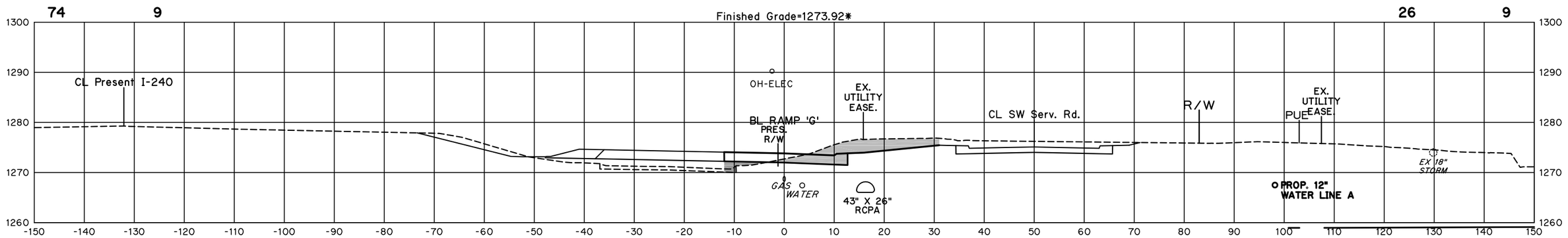

408+53.71

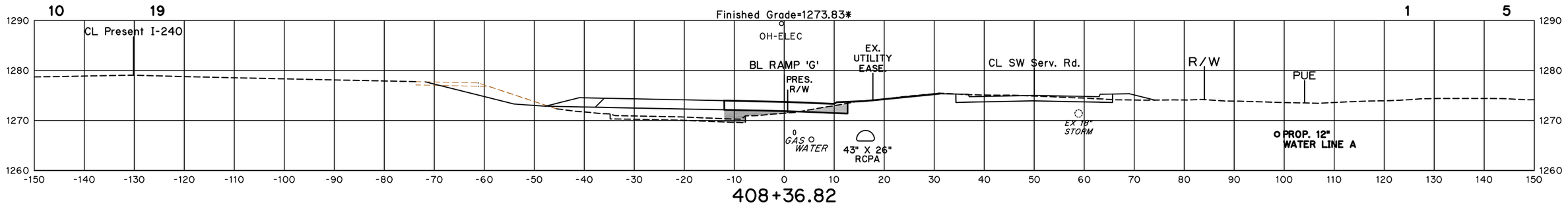

408+36.82

+31.90 O.H. POWER 'X'-ING

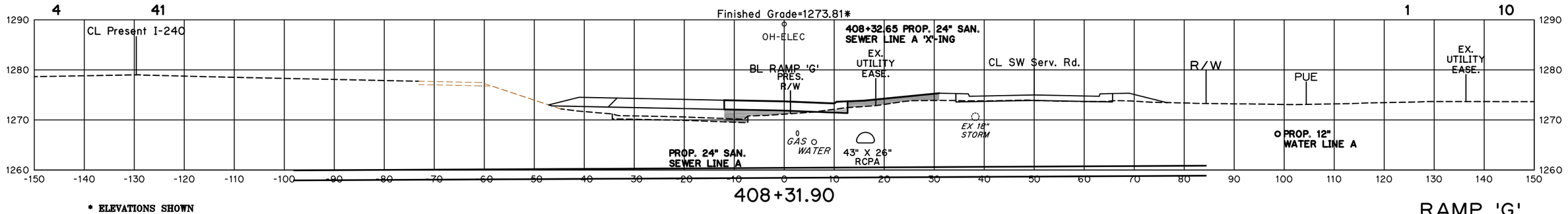

408+31.90

*** ELEVATIONS SHOWN ARE TOP OF FUTURE PERMEABLE FRICTION COURSE**

RAMP 'G'

I-35/I-240 INTERCHANGE

STATE JOB NO. 09032(17)

OKLAHOMA COUNTY SHEET NO. X21

SEPT 13, 2016 - 15:17:09
H:\PROJECTS\2789_CrossRoads_InterX_New\PHASE IA\Roadway\Drawings\XSections\XSEC-BL-RAMP G.DWG

Area	
Cut	Fill

(CAUTION) THE LOCATION OF ALL UTILITIES AS SHOWN ARE APPROXIMATE. DUE TO RELOCATION'S PLANNED OR PRESENTLY UNDER CONSTRUCTION THERE ARE SOME UTILITIES THAT WILL BE RELOCATED AND NOT SHOWN ON THESE PLANS. THE CONTRACTOR SHALL BE RESPONSIBLE FOR ANY DAMAGE TO ALL UTILITIES.

DEPTH & LOCATION OF EXISTING UTILITIES SHALL BE FIELD VERIFIED BY THE CONTRACTOR PRIOR TO CONSTRUCTION.

Volume	
Cut	Fill

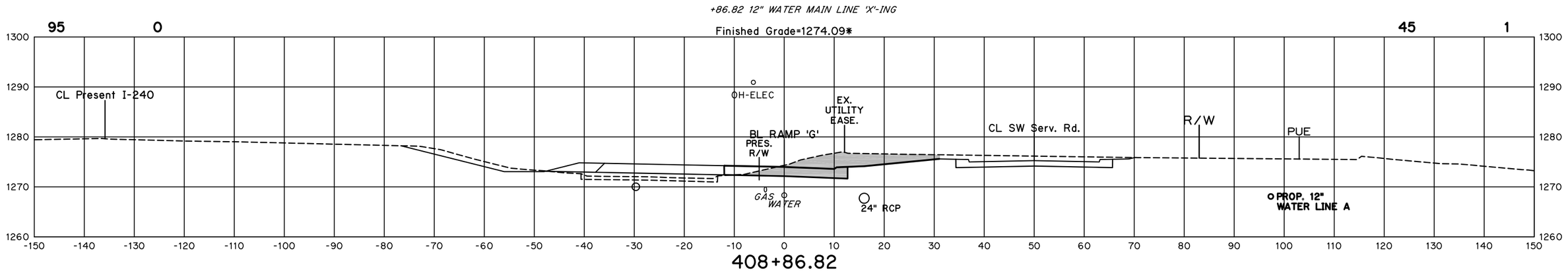

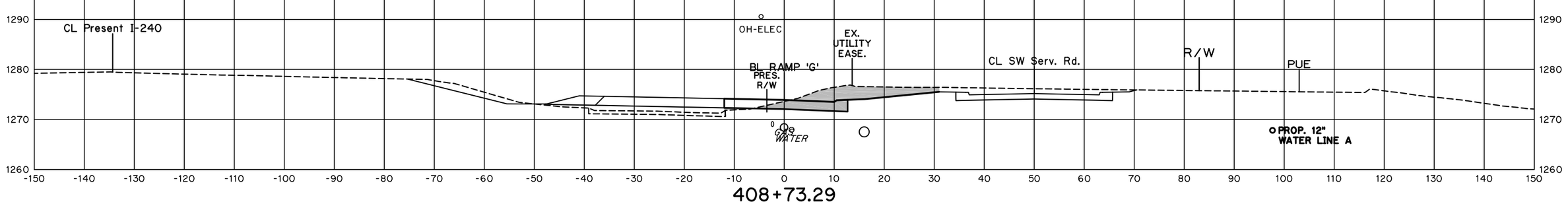

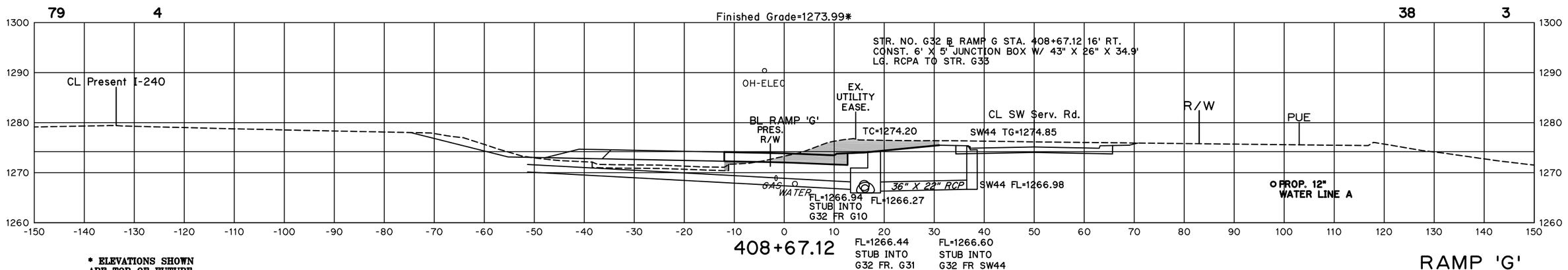

* ELEVATIONS SHOWN ARE TOP OF FUTURE PERMEABLE FRICTION COURSE

RAMP 'G'

I-35/I-240 INTERCHANGE

STATE JOB NO. 09032(17)

OKLAHOMA COUNTY SHEET NO. X22

SEPT 13, 2016 - 15:17:09
H:\PROJECTS\2789_CrossRoads_InterX_New\PHASE IA\Roadway\Drawings\XSections\XSEC-BL-RAMP G.DWG

Area	
Cut	Fill

(CAUTION) THE LOCATION OF ALL UTILITIES AS SHOWN ARE APPROXIMATE. DUE TO RELOCATION'S PLANNED OR PRESENTLY UNDER CONSTRUCTION THERE ARE SOME UTILITIES THAT WILL BE RELOCATED AND NOT SHOWN ON THESE PLANS. THE CONTRACTOR SHALL BE RESPONSIBLE FOR ANY DAMAGE TO ALL UTILITIES.

DEPTH & LOCATION OF EXISTING UTILITIES SHALL BE FIELD VERIFIED BY THE CONTRACTOR PRIOR TO CONSTRUCTION.

Volume	
Cut	Fill

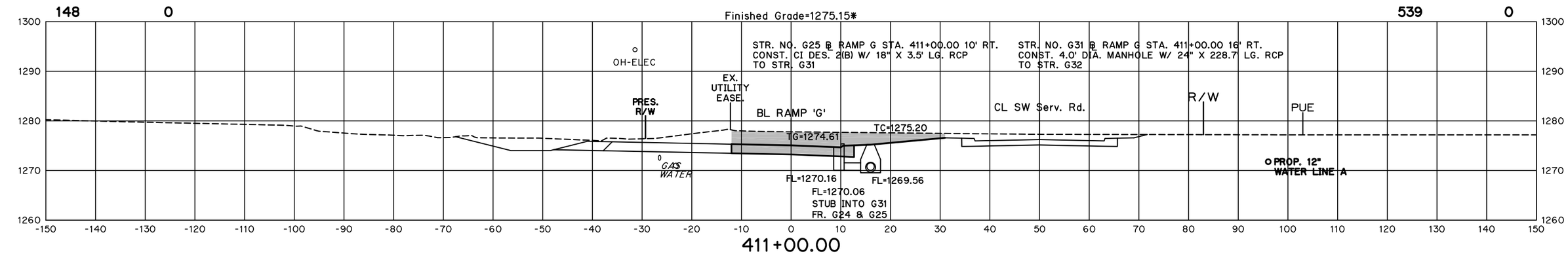

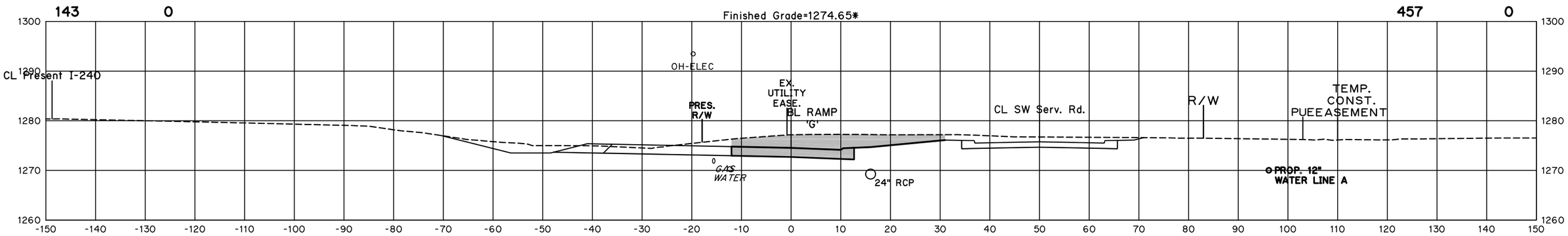

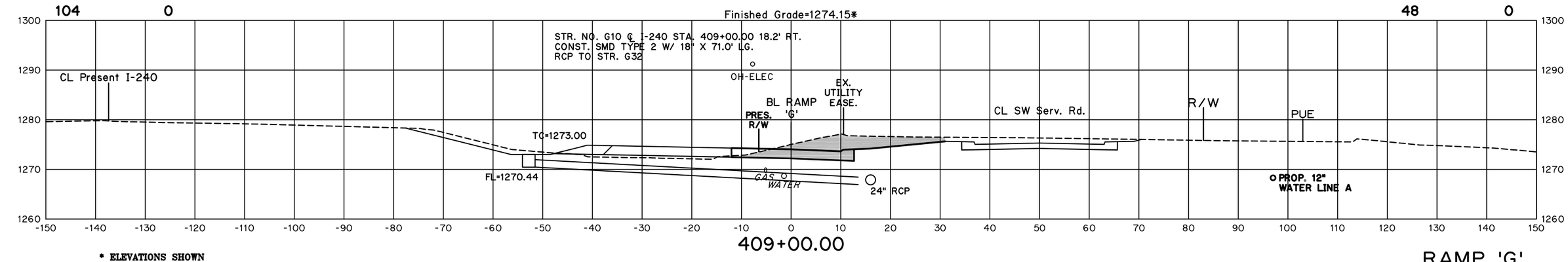

*** ELEVATIONS SHOWN ARE TOP OF FUTURE PERMEABLE FRICTION COURSE**

RAMP 'G'

I-35/I-240 INTERCHANGE

STATE JOB NO. 09032(17)

OKLAHOMA COUNTY SHEET NO. X23

SEPT 13, 2016 - 15:17:09
H:\PROJECTS\2789_CrossRoads_InterX_New\PHASE IA\Roadway\Drawings\XSections\XSEC-BL-RAMP G.DWG

Area		Volume	
Cut	Fill	Cut	Fill

(CAUTION) THE LOCATION OF ALL UTILITIES AS SHOWN ARE APPROXIMATE. DUE TO RELOCATION'S PLANNED OR PRESENTLY UNDER CONSTRUCTION THERE ARE SOME UTILITIES THAT WILL BE RELOCATED AND NOT SHOWN ON THESE PLANS. THE CONTRACTOR SHALL BE RESPONSIBLE FOR ANY DAMAGE TO ALL UTILITIES.

DEPTH & LOCATION OF EXISTING UTILITIES SHALL BE FIELD VERIFIED BY THE CONTRACTOR PRIOR TO CONSTRUCTION.

+66.04 EX. WATER LINE 'X'-ING

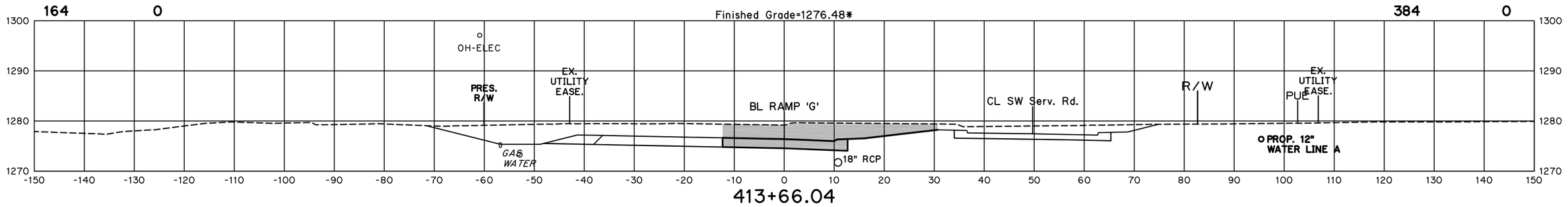

413+66.04

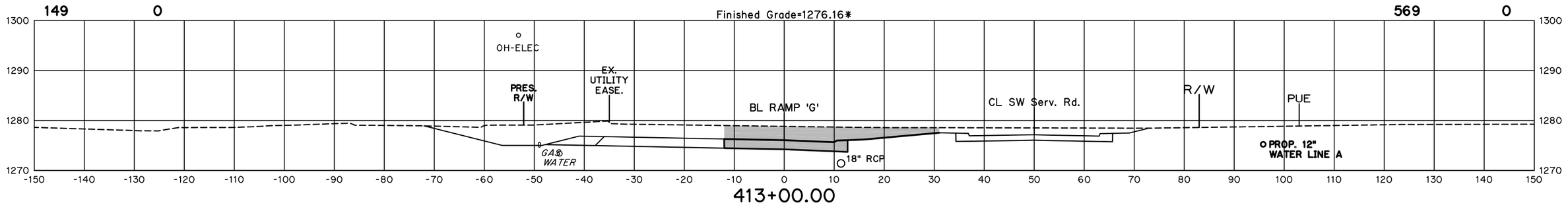

413+00.00

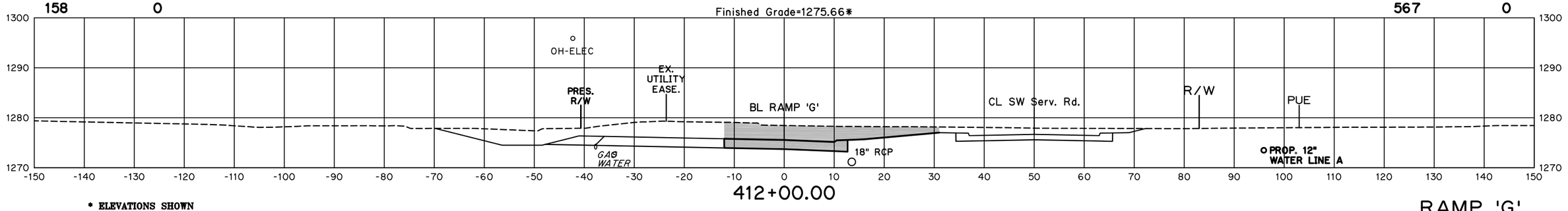

412+00.00

*** ELEVATIONS SHOWN ARE TOP OF FUTURE PERMEABLE FRICTION COURSE**

RAMP 'G'

I-35/I-240 INTERCHANGE

STATE JOB NO. 09032(17)

OKLAHOMA COUNTY SHEET NO. X24

SEPT 13, 2016 - 15:17:09
H:\PROJECTS\2789_CrossRoads_InterX_New\PHASE IA\Roadway\Drawings\XSections\XSEC-BL-RAMP G.DWG

(CAUTION) THE LOCATION OF ALL UTILITIES AS SHOWN ARE APPROXIMATE. DUE TO RELOCATION'S PLANNED OR PRESENTLY UNDER CONSTRUCTION THERE ARE SOME UTILITIES THAT WILL BE RELOCATED AND NOT SHOWN ON THESE PLANS. THE CONTRACTOR SHALL BE RESPONSIBLE FOR ANY DAMAGE TO ALL UTILITIES.

DEPTH & LOCATION OF EXISTING UTILITIES SHALL BE FIELD VERIFIED BY THE CONTRACTOR PRIOR TO CONSTRUCTION.

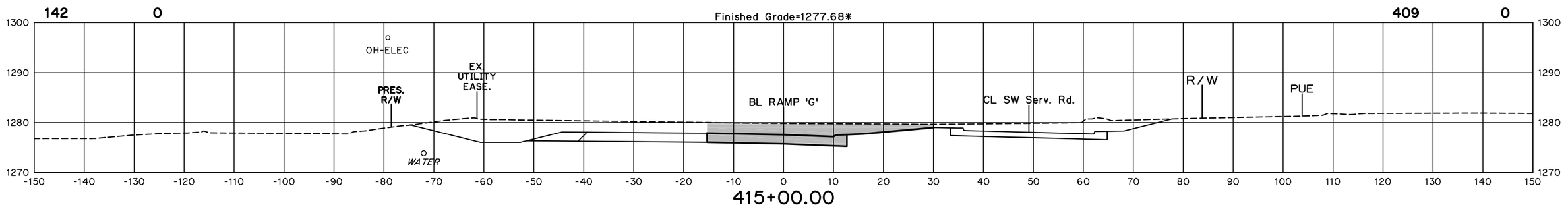

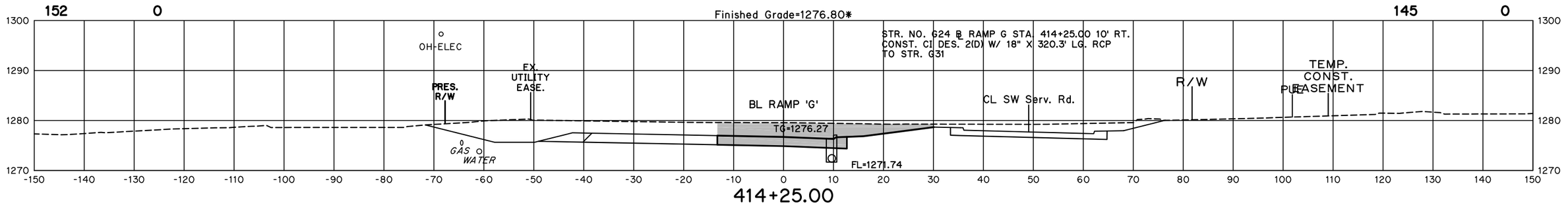

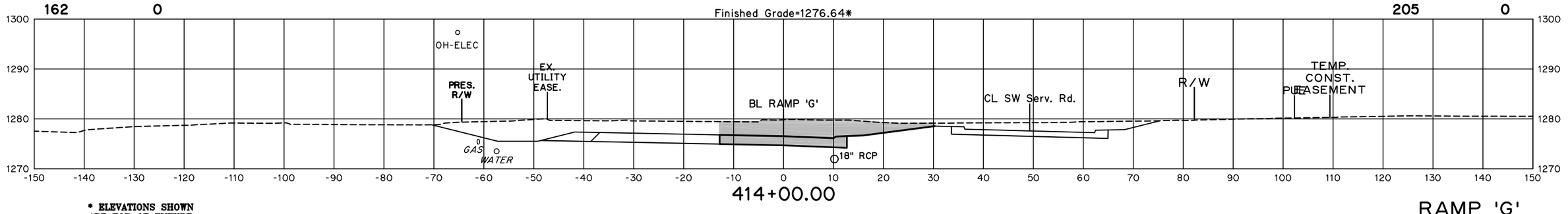

*** ELEVATIONS SHOWN ARE TOP OF FUTURE PERMEABLE FRICTION COURSE**

RAMP 'G'

I-35/I-240 INTERCHANGE

STATE JOB NO. 09032(17)

OKLAHOMA COUNTY SHEET NO. X25

SEPT 13, 2016 - 15:17:09
H:\PROJECTS\2789_CrossRoads_InterX_New\PHASE IA\Roadway\Drawings\XSections\XSEC-BL-RAMP G.DWG

(CAUTION) THE LOCATION OF ALL UTILITIES AS SHOWN ARE APPROXIMATE. DUE TO RELOCATION'S PLANNED OR PRESENTLY UNDER CONSTRUCTION THERE ARE SOME UTILITIES THAT WILL BE RELOCATED AND NOT SHOWN ON THESE PLANS. THE CONTRACTOR SHALL BE RESPONSIBLE FOR ANY DAMAGE TO ALL UTILITIES.

DEPTH & LOCATION OF EXISTING UTILITIES SHALL BE FIELD VERIFIED BY THE CONTRACTOR PRIOR TO CONSTRUCTION.

Area Cut	Area Fill	Volume Cut	Volume Fill
0	124	68	247

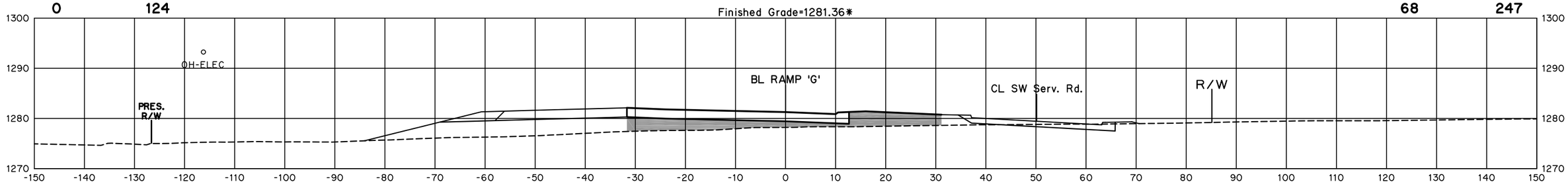

418+00.00

Area Cut	Area Fill	Volume Cut	Volume Fill
37	9	293	17

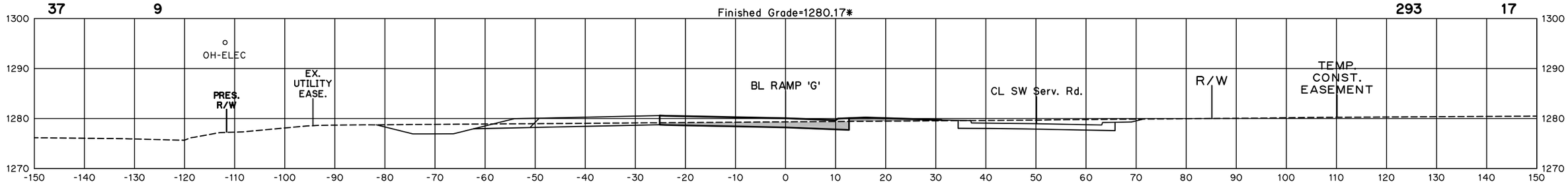

417+00.00

Area Cut	Area Fill	Volume Cut	Volume Fill
121	0	487	0

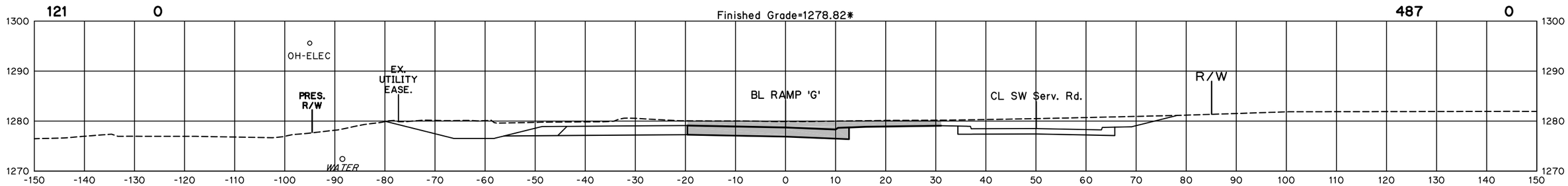

416+00.00

* ELEVATIONS SHOWN ARE TOP OF FUTURE PERMEABLE FRICTION COURSE

RAMP 'G'

I-35/I-240 INTERCHANGE

STATE JOB NO. 09032(17)

OKLAHOMA COUNTY SHEET NO. X26

SEPT 13, 2016 - 15:17:09
H:\PROJECTS\2789_CrossRoads_InterX_New\PHASE IA\Roadway\Drawings\XSections\XSEC-BL-RAMP G.DWG

(CAUTION) THE LOCATION OF ALL UTILITIES AS SHOWN ARE APPROXIMATE. DUE TO RELOCATION'S PLANNED OR PRESENTLY UNDER CONSTRUCTION THERE ARE SOME UTILITIES THAT WILL BE RELOCATED AND NOT SHOWN ON THESE PLANS. THE CONTRACTOR SHALL BE RESPONSIBLE FOR ANY DAMAGE TO ALL UTILITIES.

DEPTH & LOCATION OF EXISTING UTILITIES SHALL BE FIELD VERIFIED BY THE CONTRACTOR PRIOR TO CONSTRUCTION.

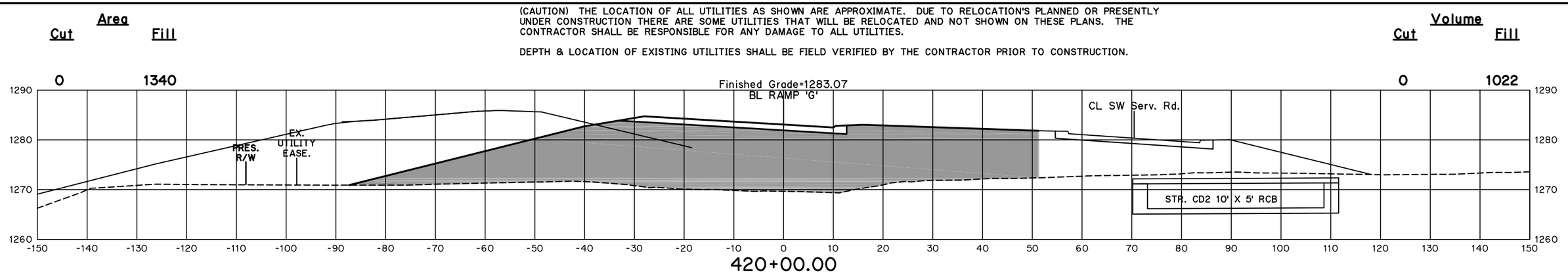

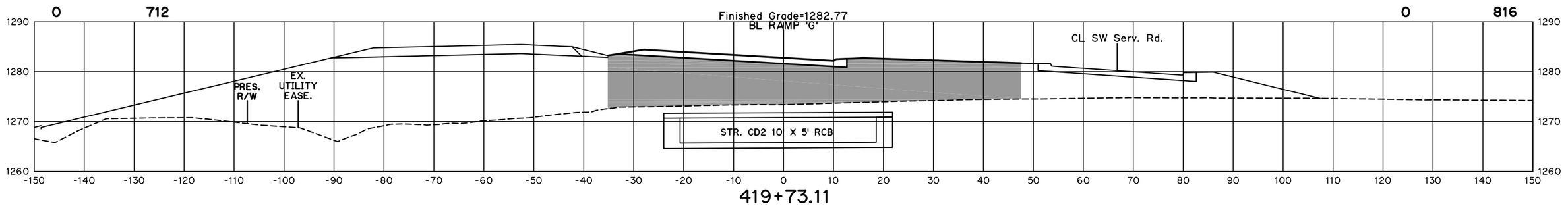

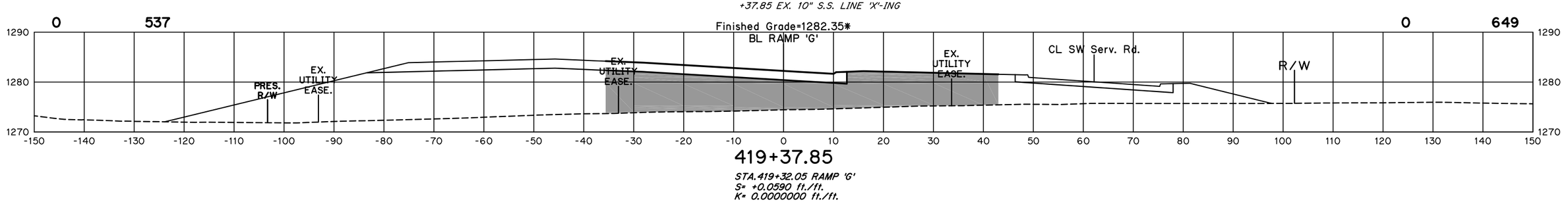

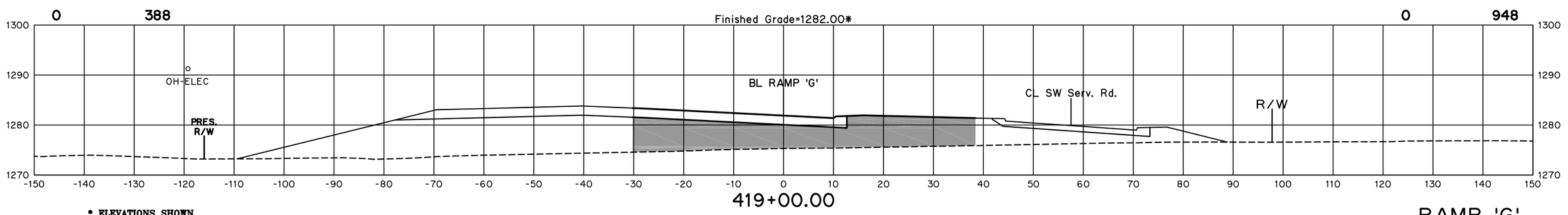

*** ELEVATIONS SHOWN ARE TOP OF FUTURE PERMEABLE FRICTION COURSE**

RAMP 'G'

I-35/I-240 INTERCHANGE

STATE JOB NO. 09032(17)

OKLAHOMA COUNTY SHEET NO. X27

SEPT 13, 2016 - 15:17:09
H:\PROJECTS\2789_CrossRoads_InterX_New\PHASE IA\Roadway\Drawings\XSections\XSEC-BL-RAMP G.DWG

(CAUTION) THE LOCATION OF ALL UTILITIES AS SHOWN ARE APPROXIMATE. DUE TO RELOCATION'S PLANNED OR PRESENTLY UNDER CONSTRUCTION THERE ARE SOME UTILITIES THAT WILL BE RELOCATED AND NOT SHOWN ON THESE PLANS. THE CONTRACTOR SHALL BE RESPONSIBLE FOR ANY DAMAGE TO ALL UTILITIES.

DEPTH & LOCATION OF EXISTING UTILITIES SHALL BE FIELD VERIFIED BY THE CONTRACTOR PRIOR TO CONSTRUCTION.

Area		Volume	
Cut	Fill	Cut	Fill
112	681	208	3159

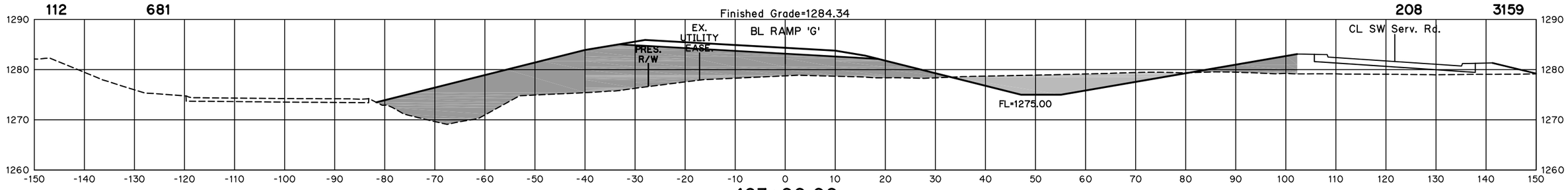

423+00.00

P.C.C. STA.422+83.89 RAMP 'G'
S= +0.0575 ft./ft.
K= 0.0002778 ft./ft.

STA.422+78.49 RAMP 'G'
S= +0.0590 ft./ft.
K= 0.0002778 ft./ft.

STA.422+89.29 RAMP 'G'
S= +0.0560 ft./ft.
K= 0.0000000 ft./ft.

0	1025	0	4150

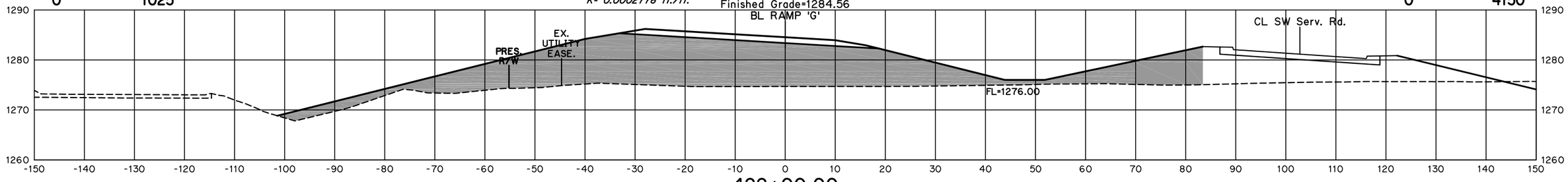

422+00.00

0	1216	0	4734

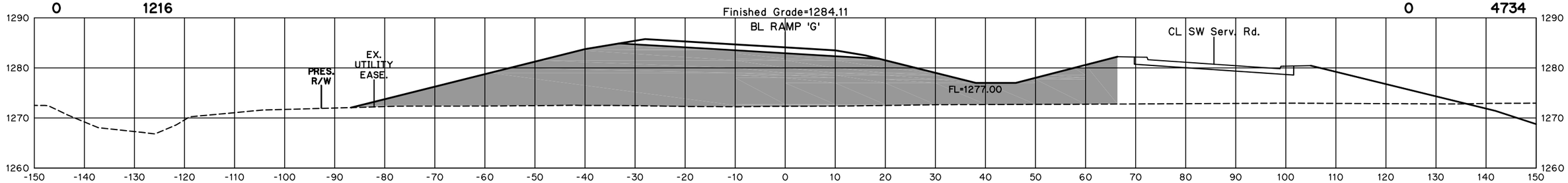

421+00.00

RAMP 'G'

I-35/I-240 INTERCHANGE

STATE JOB NO. 09032(17)

OKLAHOMA COUNTY SHEET NO. X28

SEPT 13, 2016 - 15:17:09
H:\PROJECTS\2789_CrossRoads_InterX_New\PHASE IA\Roadway\Drawings\XSections\XSEC-BL-RAMP G.DWG

(CAUTION) THE LOCATION OF ALL UTILITIES AS SHOWN ARE APPROXIMATE. DUE TO RELOCATION'S PLANNED OR PRESENTLY UNDER CONSTRUCTION THERE ARE SOME UTILITIES THAT WILL BE RELOCATED AND NOT SHOWN ON THESE PLANS. THE CONTRACTOR SHALL BE RESPONSIBLE FOR ANY DAMAGE TO ALL UTILITIES.

DEPTH & LOCATION OF EXISTING UTILITIES SHALL BE FIELD VERIFIED BY THE CONTRACTOR PRIOR TO CONSTRUCTION.

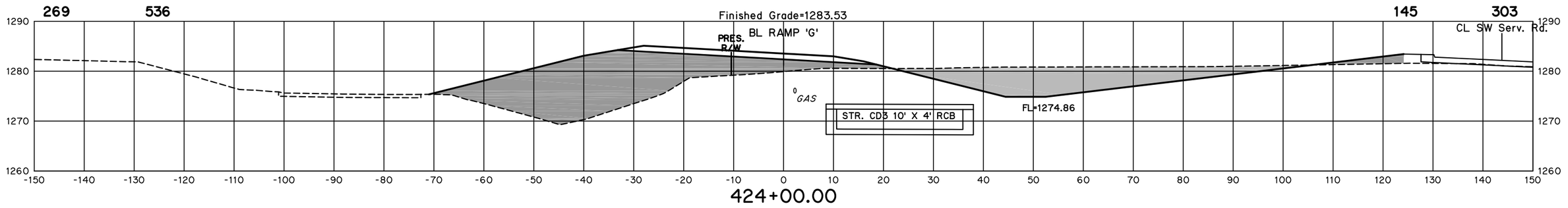

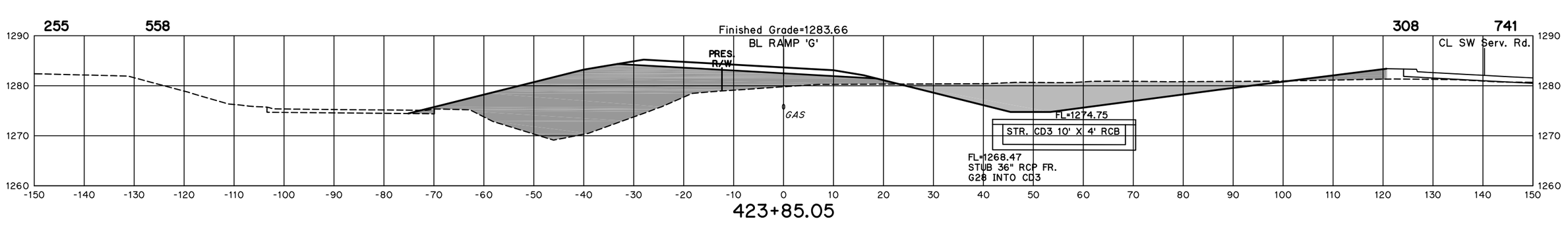

STR. NO. G28 @ RAMP G STA. 423+50.00 51.7' RT.
CONST. SMD TYPE 2B W/ 36" X 26.3' LG.
RCP TO STR. CD3

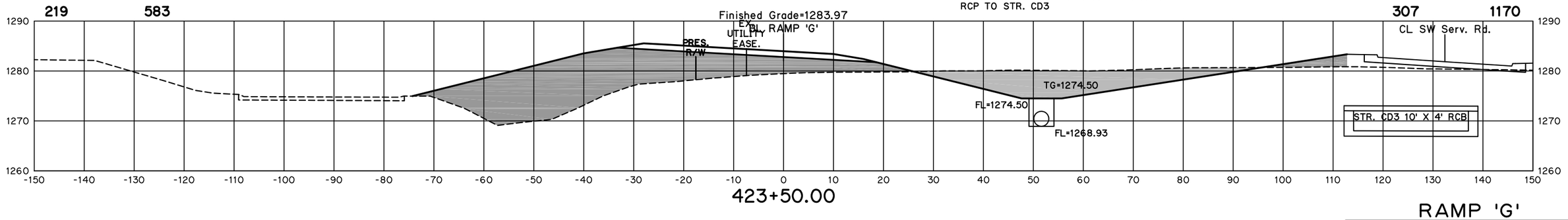

RAMP 'G'

I-35/I-240 INTERCHANGE

STATE JOB NO. 09032(17)

OKLAHOMA COUNTY SHEET NO. X29

SEPT 13, 2016 - 15:17:09
H:\PROJECTS\2789_CrossRoads_InterX_New\PHASE IA\Roadway\Drawings\XSections\XSEC-BL-RAMP G.DWG

(CAUTION) THE LOCATION OF ALL UTILITIES AS SHOWN ARE APPROXIMATE. DUE TO RELOCATION'S PLANNED OR PRESENTLY UNDER CONSTRUCTION THERE ARE SOME UTILITIES THAT WILL BE RELOCATED AND NOT SHOWN ON THESE PLANS. THE CONTRACTOR SHALL BE RESPONSIBLE FOR ANY DAMAGE TO ALL UTILITIES.

DEPTH & LOCATION OF EXISTING UTILITIES SHALL BE FIELD VERIFIED BY THE CONTRACTOR PRIOR TO CONSTRUCTION.

Area		Volume	
Cut	Fill	Cut	Fill
432	141	317	120

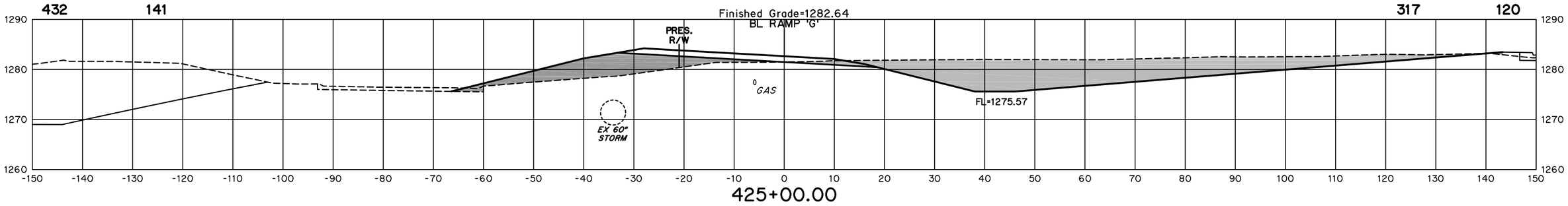

425+00.00

+79.30 4" P.E. GAS LINE 'X'-ING

394	173	864	882

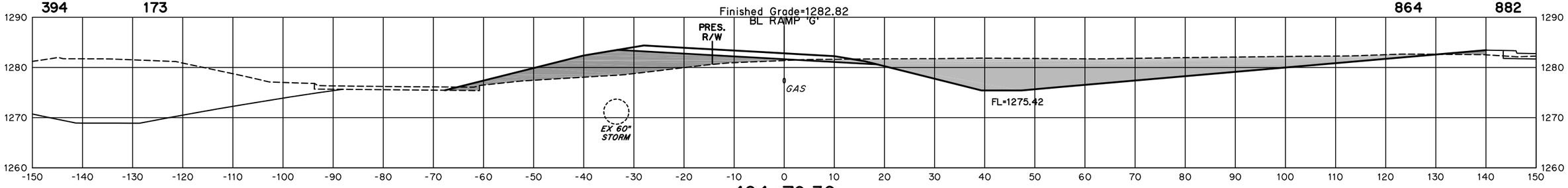

424+79.30

279	514	102	195

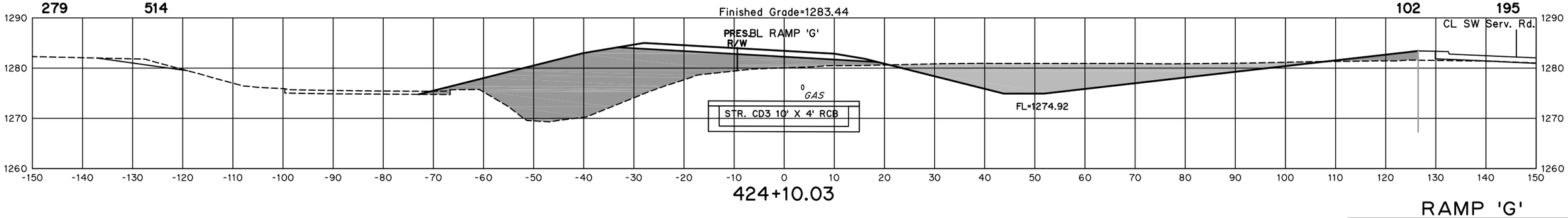

424+10.03

RAMP 'G'

I-35/I-240 INTERCHANGE

STATE JOB NO. 09032(17)

OKLAHOMA COUNTY SHEET NO. X30

SEPT 13, 2016 - 15:17:09
H:\PROJECTS\2789_CrossRoads_InterX_New\PHASE IA\Roadway\Drawings\XSections\XSEC-BL-RAMP G.DWG

(CAUTION) THE LOCATION OF ALL UTILITIES AS SHOWN ARE APPROXIMATE. DUE TO RELOCATION'S PLANNED OR PRESENTLY UNDER CONSTRUCTION THERE ARE SOME UTILITIES THAT WILL BE RELOCATED AND NOT SHOWN ON THESE PLANS. THE CONTRACTOR SHALL BE RESPONSIBLE FOR ANY DAMAGE TO ALL UTILITIES.

DEPTH & LOCATION OF EXISTING UTILITIES SHALL BE FIELD VERIFIED BY THE CONTRACTOR PRIOR TO CONSTRUCTION.

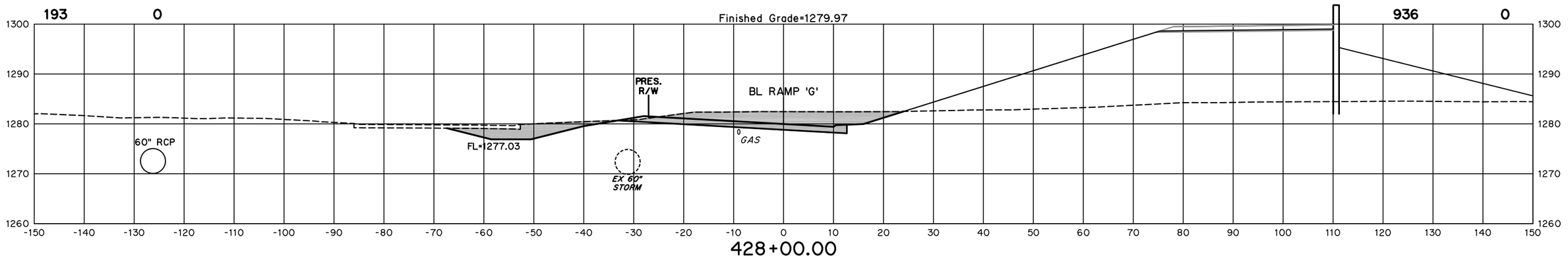

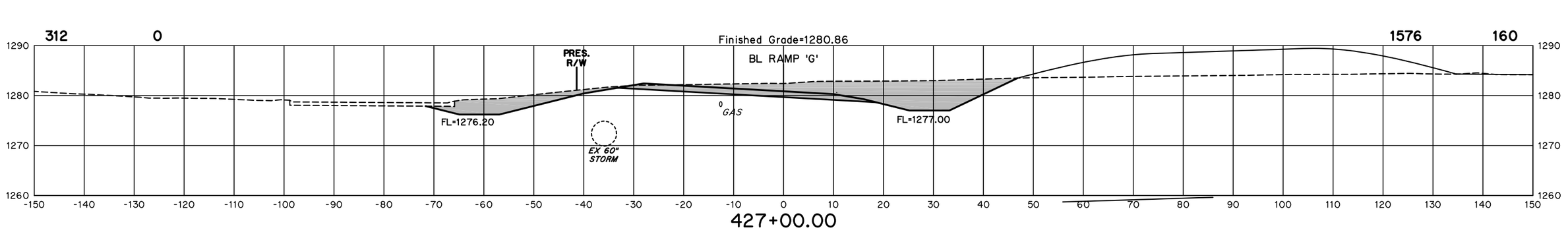

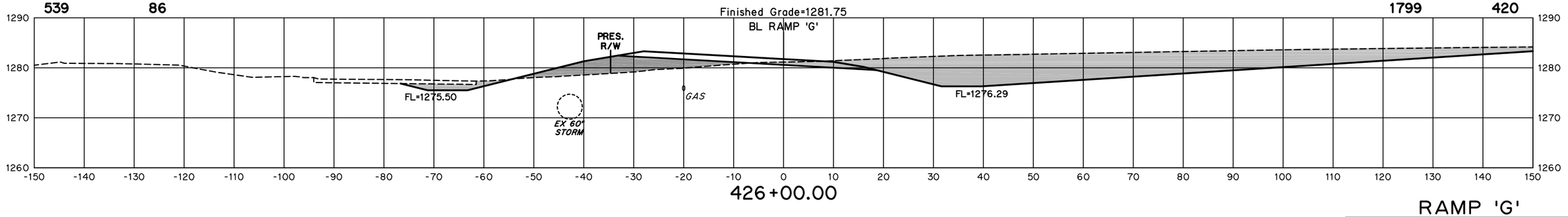

RAMP 'G'

I-35/I-240 INTERCHANGE

STATE JOB NO. 09032(17)

OKLAHOMA COUNTY SHEET NO. X31

SEPT 13, 2016 - 15:17:09
H:\PROJECTS\2789_CrossRoads_InterX_New\PHASE IA\Roadway\Drawings\XSections\XSEC-BL-RAMP G.DWG

Area		Volume	
Cut	Fill	Cut	Fill

(CAUTION) THE LOCATION OF ALL UTILITIES AS SHOWN ARE APPROXIMATE. DUE TO RELOCATION'S PLANNED OR PRESENTLY UNDER CONSTRUCTION THERE ARE SOME UTILITIES THAT WILL BE RELOCATED AND NOT SHOWN ON THESE PLANS. THE CONTRACTOR SHALL BE RESPONSIBLE FOR ANY DAMAGE TO ALL UTILITIES.

DEPTH & LOCATION OF EXISTING UTILITIES SHALL BE FIELD VERIFIED BY THE CONTRACTOR PRIOR TO CONSTRUCTION.

429+05.71 EX. 60" STORM PIPE 'X'-ING

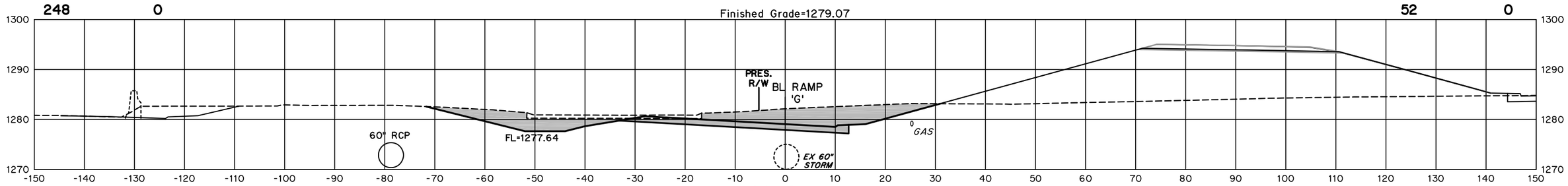

429+05.71

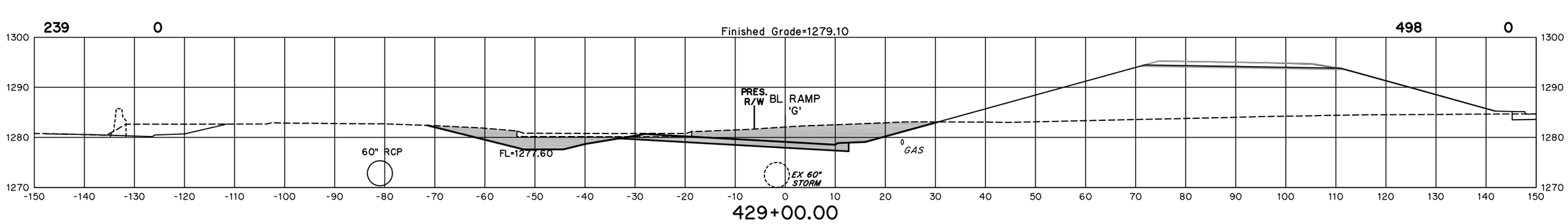

429+00.00

+36.93 4" P.E. GAS LINE 'X'-ING

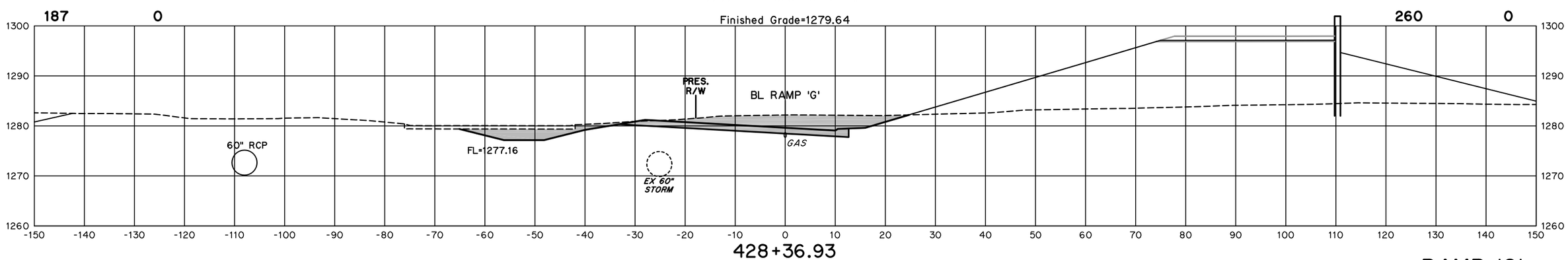

428+36.93

RAMP 'G'

I-35/I-240 INTERCHANGE

STATE JOB NO. 09032(17)

OKLAHOMA COUNTY SHEET NO. X32

SEPT 13, 2016 - 15:17:09
H:\PROJECTS\2789_CrossRoads_InterX_New\PHASE IA\Roadway\Drawings\XSections\XSEC-BL-RAMP G.DWG

(CAUTION) THE LOCATION OF ALL UTILITIES AS SHOWN ARE APPROXIMATE. DUE TO RELOCATION'S PLANNED OR PRESENTLY UNDER CONSTRUCTION THERE ARE SOME UTILITIES THAT WILL BE RELOCATED AND NOT SHOWN ON THESE PLANS. THE CONTRACTOR SHALL BE RESPONSIBLE FOR ANY DAMAGE TO ALL UTILITIES.

DEPTH & LOCATION OF EXISTING UTILITIES SHALL BE FIELD VERIFIED BY THE CONTRACTOR PRIOR TO CONSTRUCTION.

Area Cut 317 Fill 0

Volume Cut 76 Fill 0

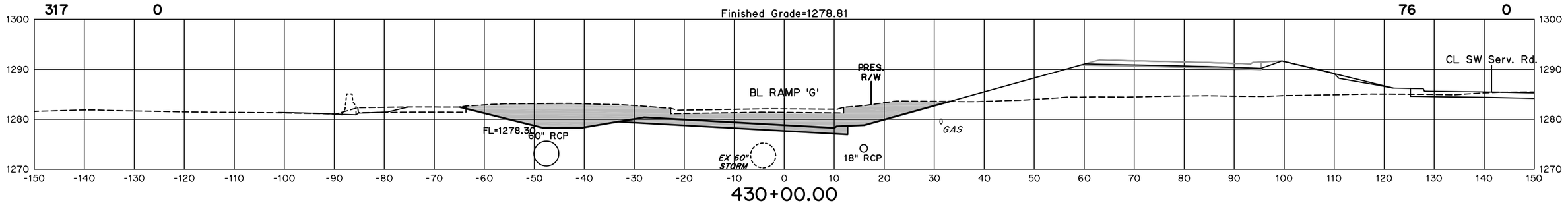

430+00.00

429+93.50 EX. 60" STORM PIPE 'X'-ING

Area Cut 312 Fill 0

Volume Cut 150 Fill 0

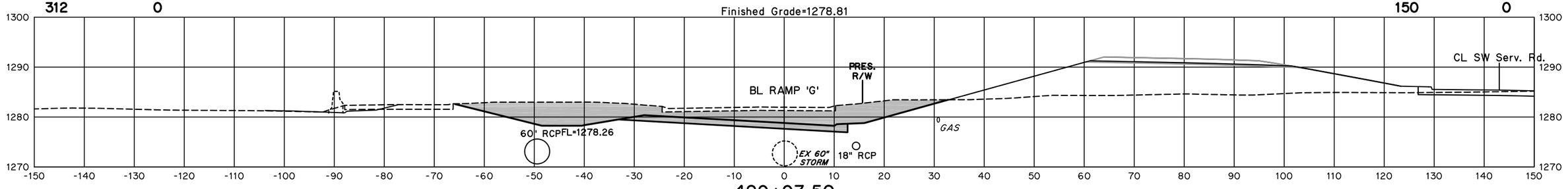

429+93.50

Area Cut 302 Fill 0

Volume Cut 760 Fill 0

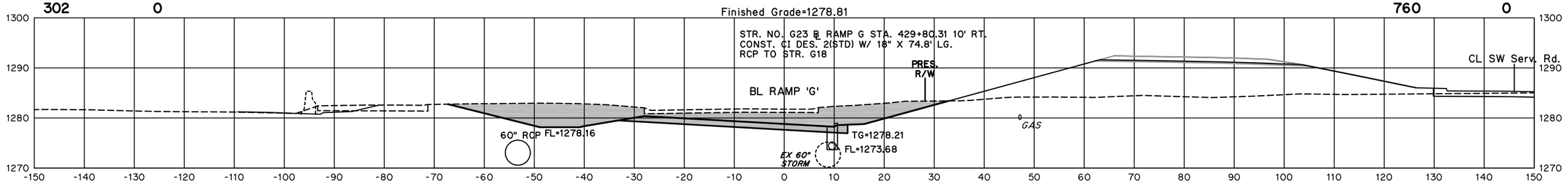

429+80.31

RAMP 'G'

I-35/I-240 INTERCHANGE

STATE JOB NO. 09032(17)

OKLAHOMA COUNTY SHEET NO. X33

SEPT 13, 2016 - 15:17:09
H:\PROJECTS\2789_CrossRoads_InterX_New\PHASE IA\Roadway\Drawings\XSections\XSEC-BL-RAMP G.DWG

Area
Cut Fill

(CAUTION) THE LOCATION OF ALL UTILITIES AS SHOWN ARE APPROXIMATE. DUE TO RELOCATION'S PLANNED OR PRESENTLY UNDER CONSTRUCTION THERE ARE SOME UTILITIES THAT WILL BE RELOCATED AND NOT SHOWN ON THESE PLANS. THE CONTRACTOR SHALL BE RESPONSIBLE FOR ANY DAMAGE TO ALL UTILITIES.

DEPTH & LOCATION OF EXISTING UTILITIES SHALL BE FIELD VERIFIED BY THE CONTRACTOR PRIOR TO CONSTRUCTION.

Volume
Cut Fill

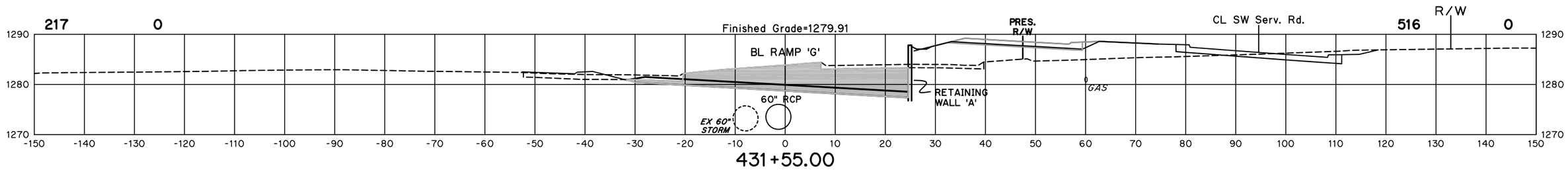

431+55.00

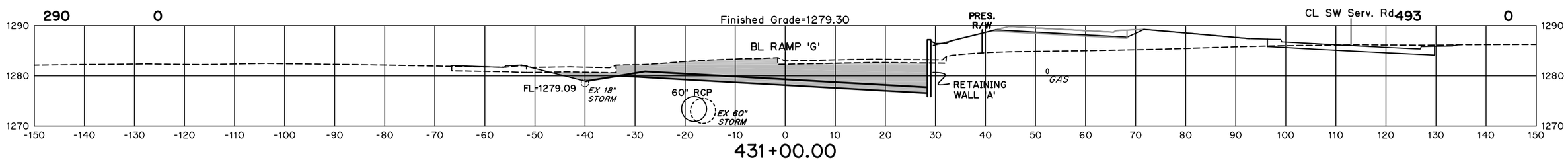

431+00.00

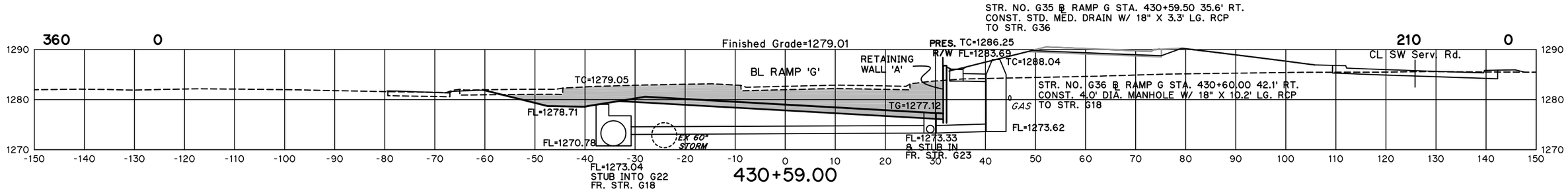

430+59.00

STR. NO. G22 ℄ RAMP G STA. 430+59.00 34.0' LT.
CONST. 8' X 7' JUNCTION BOX W/ 60" X 414.6' LG.
RCP TO PCES OUTLET @ APPROX. ST. 427+04 184.5' LT.

STR. NO. G18 ℄ RAMP G STA. 430+59.00 30.10' RT.
CONST. IL.B. TYPE I DES. 2 W/ 28" X 18" X 59.3' LG.
RCPA TO STR. G22

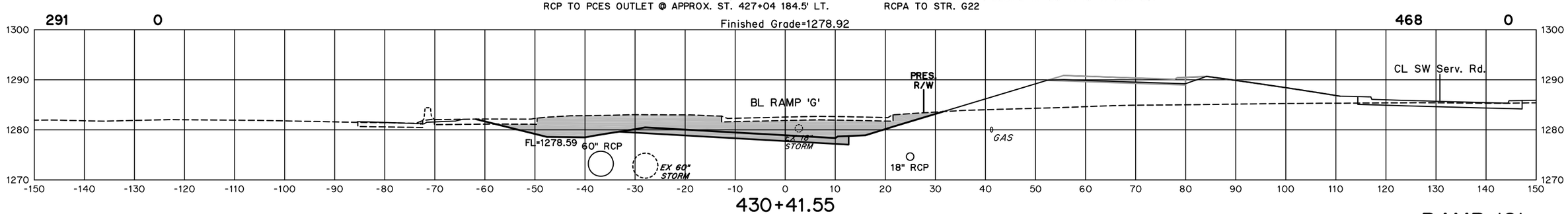

430+41.55

RAMP 'G'

I-35/I-240 INTERCHANGE

STATE JOB NO. 09032(17)
OKLAHOMA COUNTY SHEET NO. X34

SEPT 13, 2016 - 15:17:09
H:\PROJECTS\2789_CrossRoads_InterX_New\PHASE IA\Roadway\Drawings\XSections\XSEC-BL-RAMP G.DWG

Area Cut Fill

(CAUTION) THE LOCATION OF ALL UTILITIES AS SHOWN ARE APPROXIMATE. DUE TO RELOCATION'S PLANNED OR PRESENTLY UNDER CONSTRUCTION THERE ARE SOME UTILITIES THAT WILL BE RELOCATED AND NOT SHOWN ON THESE PLANS. THE CONTRACTOR SHALL BE RESPONSIBLE FOR ANY DAMAGE TO ALL UTILITIES.

DEPTH & LOCATION OF EXISTING UTILITIES SHALL BE FIELD VERIFIED BY THE CONTRACTOR PRIOR TO CONSTRUCTION.

Volume Cut Fill

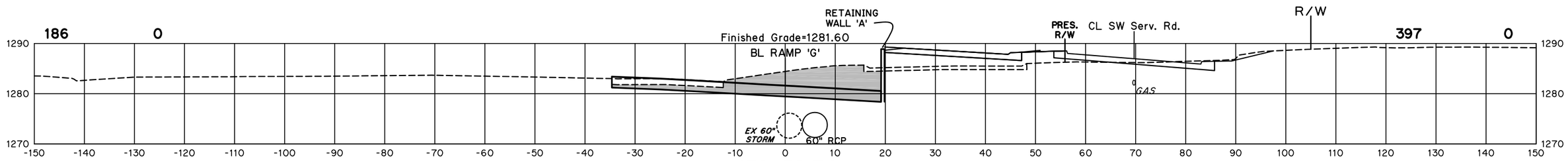

432+50.74

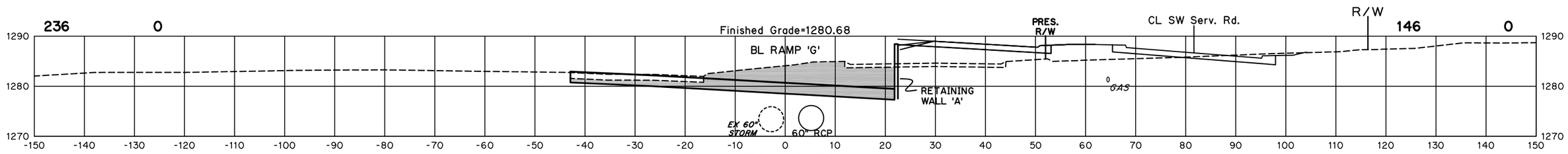

432+00.00

431+84.00 EX. FIBEROPTIC LINE 'X'-ING

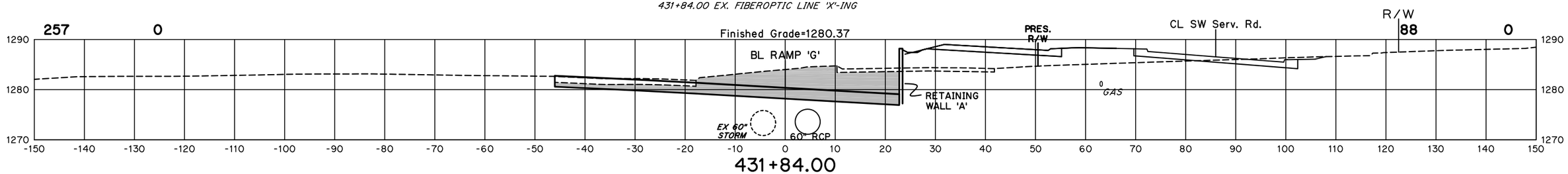

431+84.00

STR. NO. G21 ℄ RAMP G STA. 431+75.00 5.4' RT.
CONST. 8' x 7' JUNCTION BOX W/ 60" X 117.2' LG. RCP
TO STR. G22

STR. NO. G15 ℄ RAMP G STA. 431+75.00 21.8' RT.
CONST. I.L.B. TYPE I DES. 2 W/ 18" X 11.1' LG. RCP
TO STR. G21

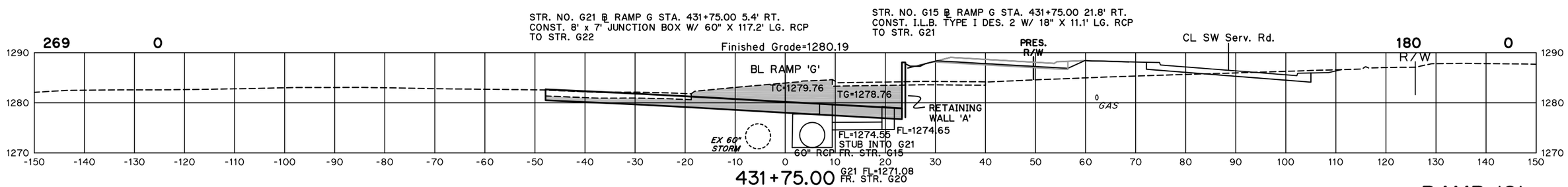

431+75.00

RAMP 'G'

I-35/I-240 INTERCHANGE

STATE JOB NO. 09032(17)

OKLAHOMA COUNTY SHEET NO. X35

SEPT 13, 2016 - 15:17:09
H:\PROJECTS\2789_CrossRoads_InterX_New\PHASE IA\Roadway\Drawings\XSections\XSEC-BL-RAMP G.DWG

Area
Cut Fill

(CAUTION) THE LOCATION OF ALL UTILITIES AS SHOWN ARE APPROXIMATE. DUE TO RELOCATION'S PLANNED OR PRESENTLY UNDER CONSTRUCTION THERE ARE SOME UTILITIES THAT WILL BE RELOCATED AND NOT SHOWN ON THESE PLANS. THE CONTRACTOR SHALL BE RESPONSIBLE FOR ANY DAMAGE TO ALL UTILITIES.

DEPTH & LOCATION OF EXISTING UTILITIES SHALL BE FIELD VERIFIED BY THE CONTRACTOR PRIOR TO CONSTRUCTION.

Volume
Cut Fill

STR. NO. G13 ℄ RAMP G STA. 434+34.53 12' RT.
CONST. I.L.B. TYPE I DES. 2 W/ 18" X 3.3' LG. RCP
TO EXIST. MANHOLE

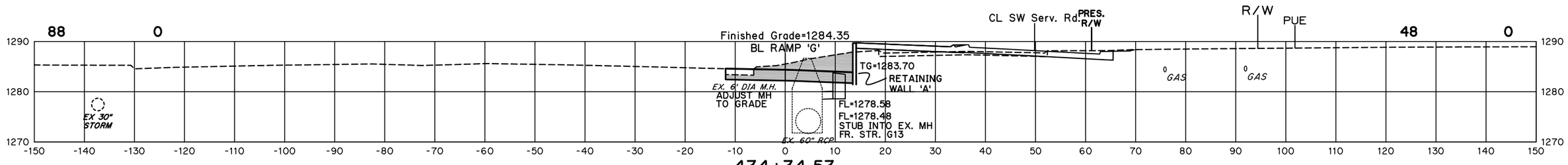

434+34.53

+20.05 6" C.S. GAS LINE 'X'-ING

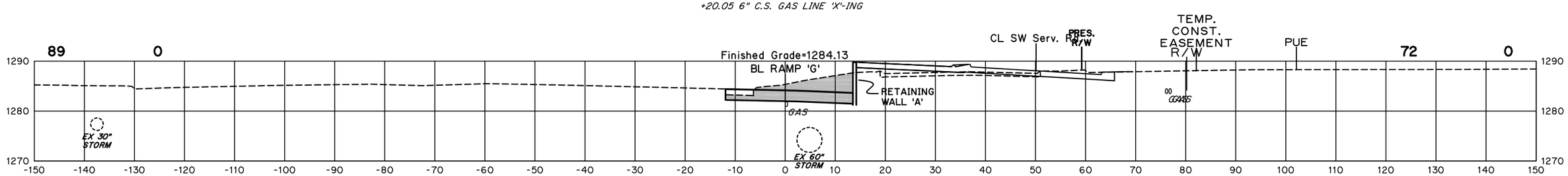

434+20.05

P.T. STA.434+05.15 RAMP 'G'
S= +0.0420 ft./ft.
K= 0.0002778 ft./ft.

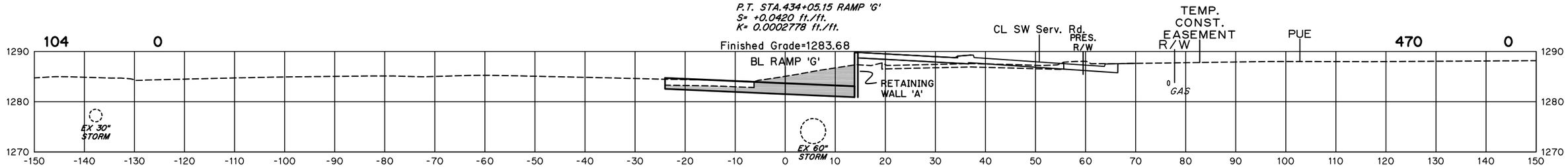

434+00.00

STA.433+54.75 RAMP 'G'
S= +0.0560 ft./ft.
K= 0.0002778 ft./ft.

STR. NO. G20 ℄ RAMP G STA. 433+00.00 4.5' RT.
CONST. 8' X 7' JUNCTION BOX W/ 60" X 117.5' LG. RCP
TO STR. G21

STR. NO. G14 ℄ RAMP G STA. 433+00.00 15.46' RT.
CONST. I.L.B. TYPE I DES. 2 W/ 18" X 5.6' LG. RCP
TO STR. G20

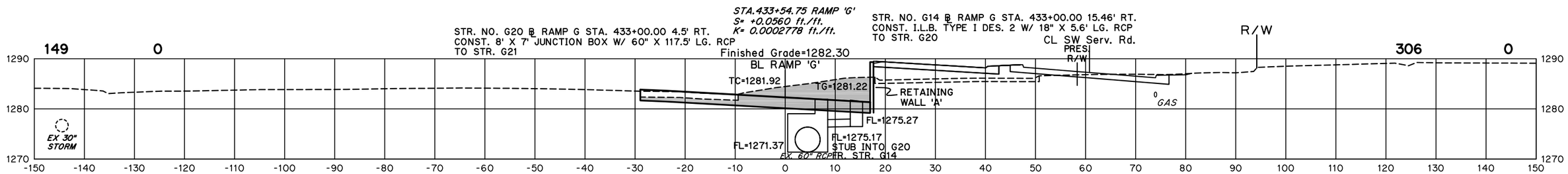

433+00.00

RAMP 'G'

I-35/I-240 INTERCHANGE

STATE JOB NO. 09032(17)
OKLAHOMA COUNTY SHEET NO. X36

SEPT 13, 2016 - 15:17:09
H:\PROJECTS\2789_CrossRoads_InterX_New\PHASE IA\Roadway\Drawings\XSections\XSEC-BL-RAMP G.DWG

Area	
Cut	Fill

(CAUTION) THE LOCATION OF ALL UTILITIES AS SHOWN ARE APPROXIMATE. DUE TO RELOCATION'S PLANNED OR PRESENTLY UNDER CONSTRUCTION THERE ARE SOME UTILITIES THAT WILL BE RELOCATED AND NOT SHOWN ON THESE PLANS. THE CONTRACTOR SHALL BE RESPONSIBLE FOR ANY DAMAGE TO ALL UTILITIES.

DEPTH & LOCATION OF EXISTING UTILITIES SHALL BE FIELD VERIFIED BY THE CONTRACTOR PRIOR TO CONSTRUCTION.

Volume	
Cut	Fill

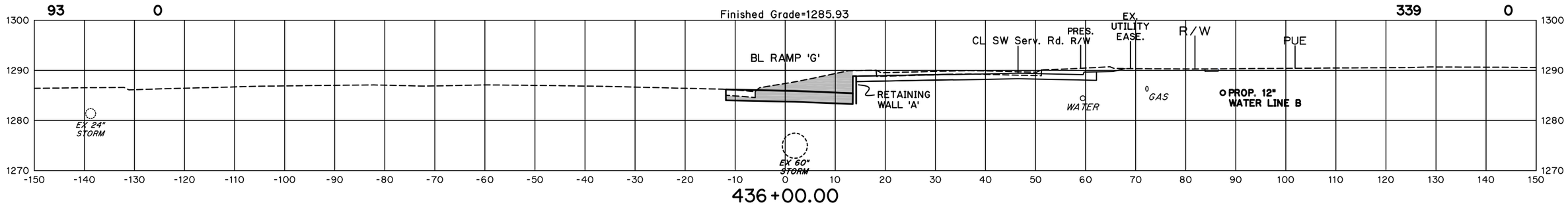

436+00.00

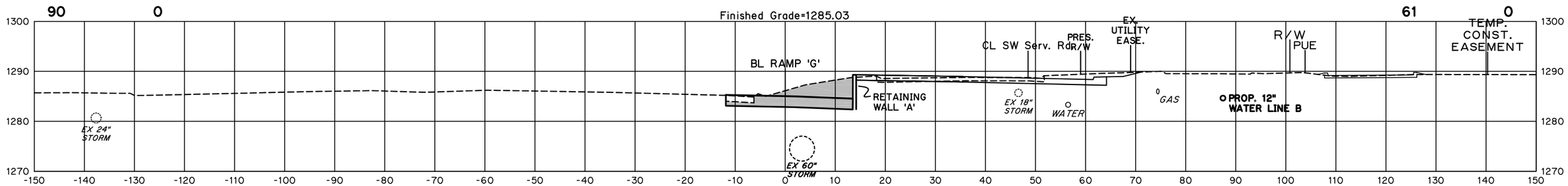

435+00.00

+81.61 O.H. POWER 'X'-ING
STA.434+81.47 RAMP 'G'
S= +0.0208 ft./ft.
K= 0.0000000 ft./ft.

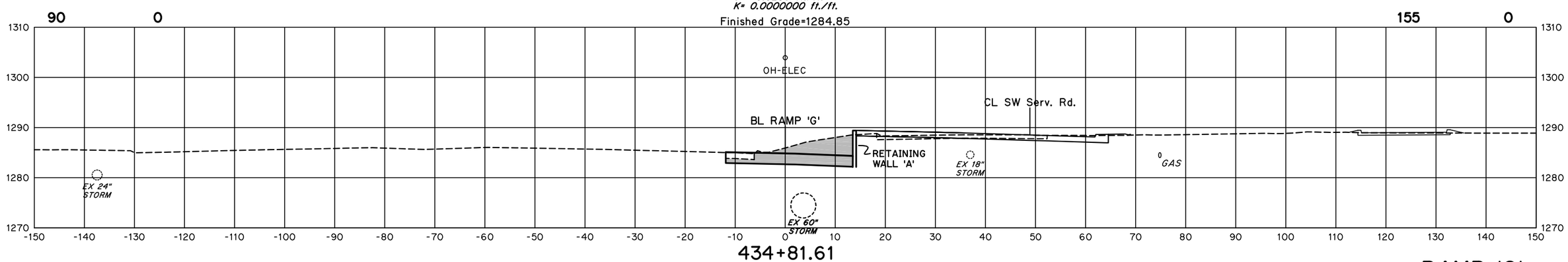

434+81.61

RAMP 'G'

I-35/I-240 INTERCHANGE

STATE JOB NO. 09032(17)

OKLAHOMA COUNTY SHEET NO. X37

SEPT 13, 2016 - 15:17:09
H:\PROJECTS\2789_CrossRoads_InterX_New\PHASE IA\Roadway\Drawings\XSections\XSEC-BL-RAMP G.DWG

(CAUTION) THE LOCATION OF ALL UTILITIES AS SHOWN ARE APPROXIMATE. DUE TO RELOCATION'S PLANNED OR PRESENTLY UNDER CONSTRUCTION THERE ARE SOME UTILITIES THAT WILL BE RELOCATED AND NOT SHOWN ON THESE PLANS. THE CONTRACTOR SHALL BE RESPONSIBLE FOR ANY DAMAGE TO ALL UTILITIES.

DEPTH & LOCATION OF EXISTING UTILITIES SHALL BE FIELD VERIFIED BY THE CONTRACTOR PRIOR TO CONSTRUCTION.

Area		Volume	
Cut	Fill	Cut	Fill
81	0	319	0

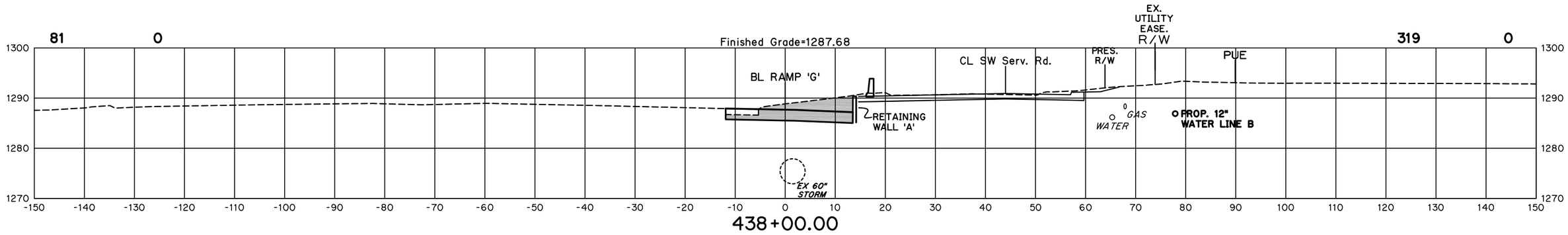

438+00.00

91	0	307	0

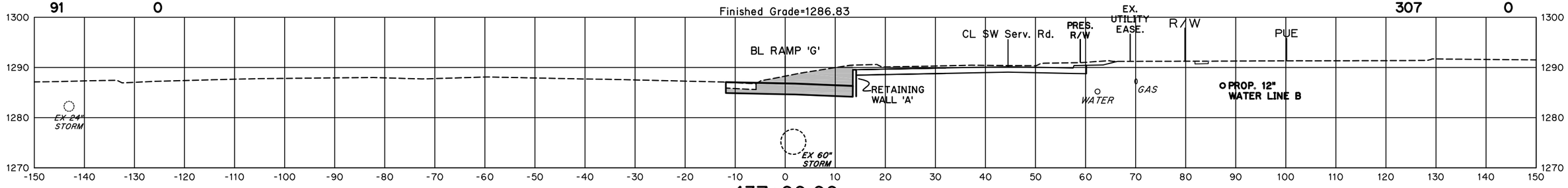

437+00.00

STR. NO. G12 @ RAMP G STA. 436+10.05 12' RT.
CONST. I.L.B. TYPE I DES. 2 W/ 18" X 2.7' LG. RCP
TO EXIST. MANHOLE

93	0	35	0

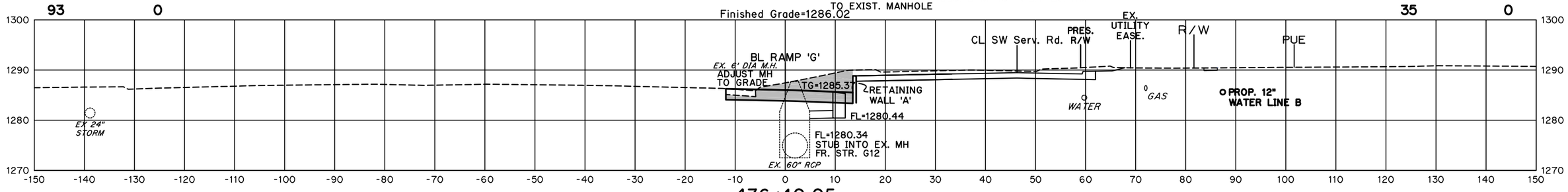

436+10.05

RAMP 'G'

I-35/I-240 INTERCHANGE

STATE JOB NO. 09032(17)

OKLAHOMA COUNTY SHEET NO. X38

SEPT 13, 2016 - 15:17:09
H:\PROJECTS\2789_CrossRoads_InterX_New\PHASE IA\Roadway\Drawings\XSections\XSEC-BL-RAMP G.DWG

Area		Volume	
Cut	Fill	Cut	Fill

(CAUTION) THE LOCATION OF ALL UTILITIES AS SHOWN ARE APPROXIMATE. DUE TO RELOCATION'S PLANNED OR PRESENTLY UNDER CONSTRUCTION THERE ARE SOME UTILITIES THAT WILL BE RELOCATED AND NOT SHOWN ON THESE PLANS. THE CONTRACTOR SHALL BE RESPONSIBLE FOR ANY DAMAGE TO ALL UTILITIES.

DEPTH & LOCATION OF EXISTING UTILITIES SHALL BE FIELD VERIFIED BY THE CONTRACTOR PRIOR TO CONSTRUCTION.

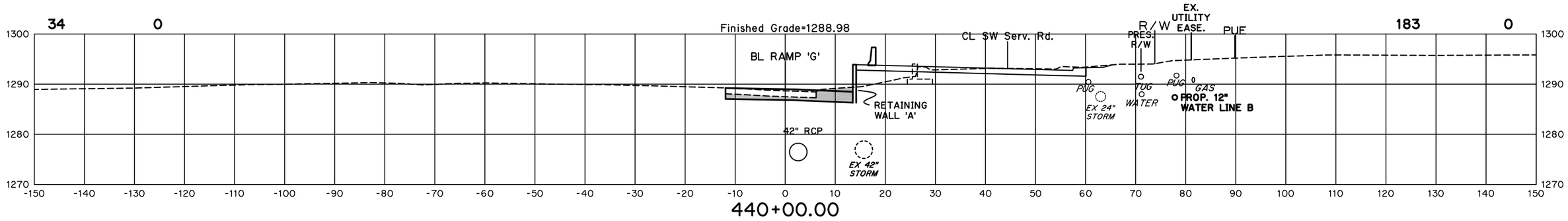

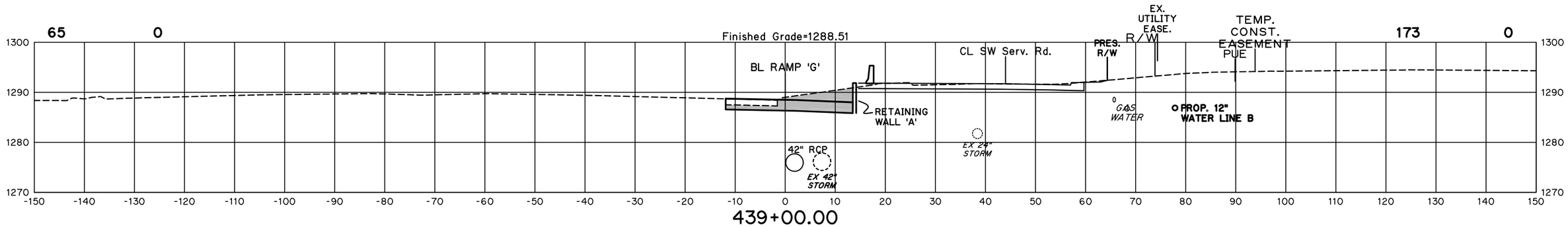

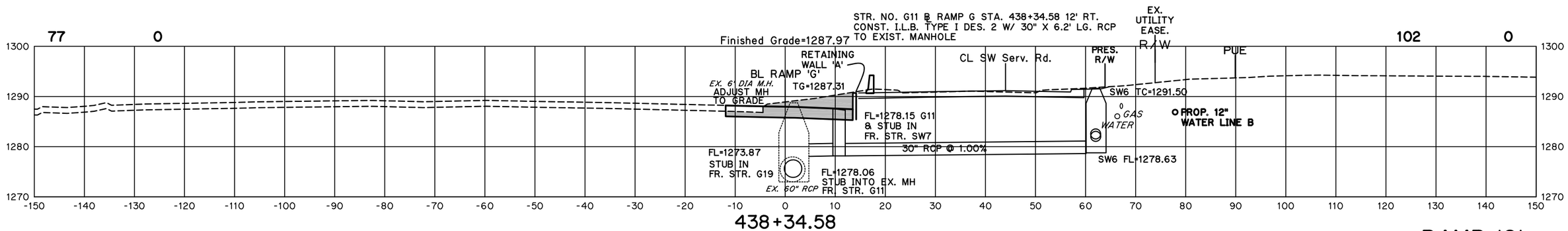

RAMP 'G'

I-35/I-240 INTERCHANGE

STATE JOB NO. 09032(17)

OKLAHOMA COUNTY SHEET NO. X39

SEPT 13, 2016 - 15:17:09
H:\PROJECTS\2789_CrossRoads_InterX_New\PHASE IA\Roadway\Drawings\XSections\XSEC-BL-RAMP G.DWG

Area	
Cut	Fill

(CAUTION) THE LOCATION OF ALL UTILITIES AS SHOWN ARE APPROXIMATE. DUE TO RELOCATION'S PLANNED OR PRESENTLY UNDER CONSTRUCTION THERE ARE SOME UTILITIES THAT WILL BE RELOCATED AND NOT SHOWN ON THESE PLANS. THE CONTRACTOR SHALL BE RESPONSIBLE FOR ANY DAMAGE TO ALL UTILITIES.

DEPTH & LOCATION OF EXISTING UTILITIES SHALL BE FIELD VERIFIED BY THE CONTRACTOR PRIOR TO CONSTRUCTION.

Volume	
Cut	Fill

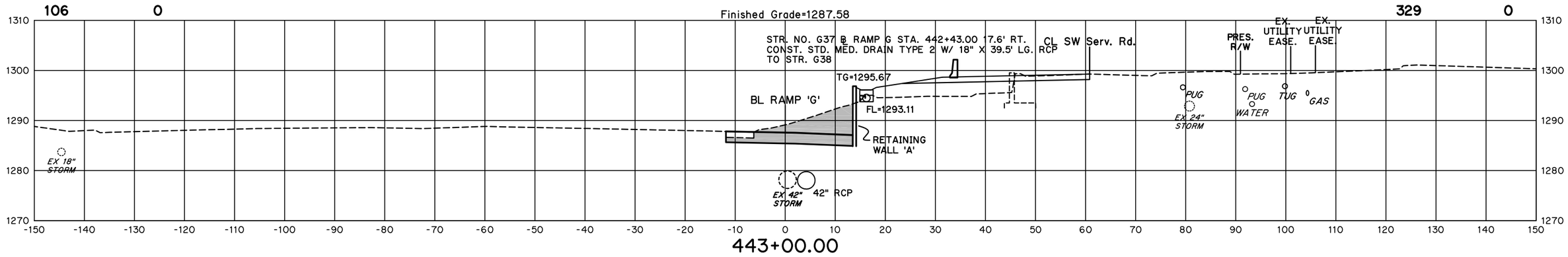

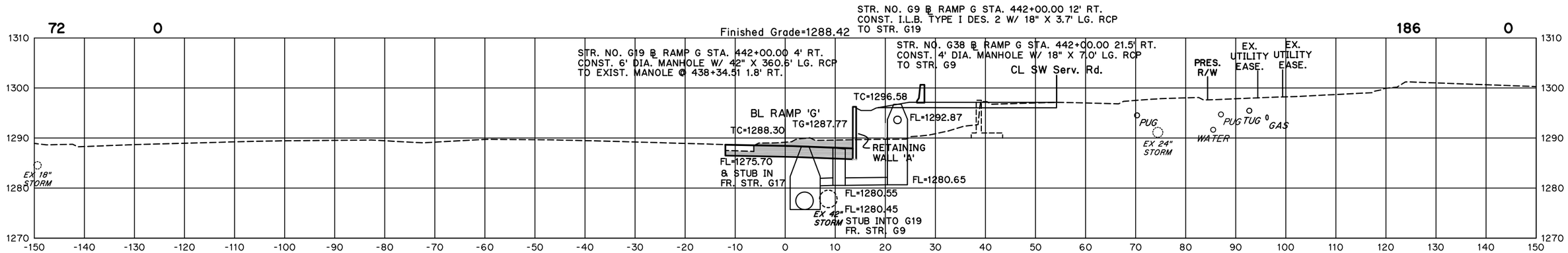

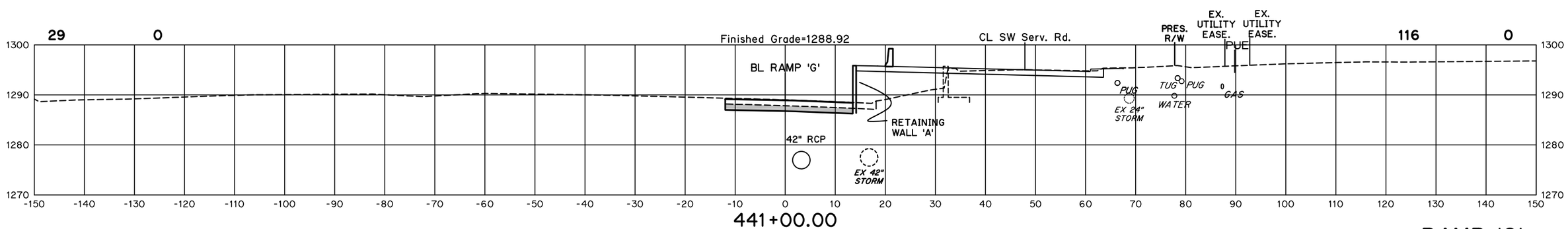

RAMP 'G'

I-35/I-240 INTERCHANGE

STATE JOB NO. 09032(17)

OKLAHOMA COUNTY SHEET NO. X40

SEPT 13, 2016 - 15:17:09
H:\PROJECTS\2789_CrossRoads_InterX_New\PHASE IA\Roadway\Drawings\XSections\XSEC-BL-RAMP G.DWG

Area		Volume	
Cut	Fill	Cut	Fill

(CAUTION) THE LOCATION OF ALL UTILITIES AS SHOWN ARE APPROXIMATE. DUE TO RELOCATION'S PLANNED OR PRESENTLY UNDER CONSTRUCTION THERE ARE SOME UTILITIES THAT WILL BE RELOCATED AND NOT SHOWN ON THESE PLANS. THE CONTRACTOR SHALL BE RESPONSIBLE FOR ANY DAMAGE TO ALL UTILITIES.

DEPTH & LOCATION OF EXISTING UTILITIES SHALL BE FIELD VERIFIED BY THE CONTRACTOR PRIOR TO CONSTRUCTION.

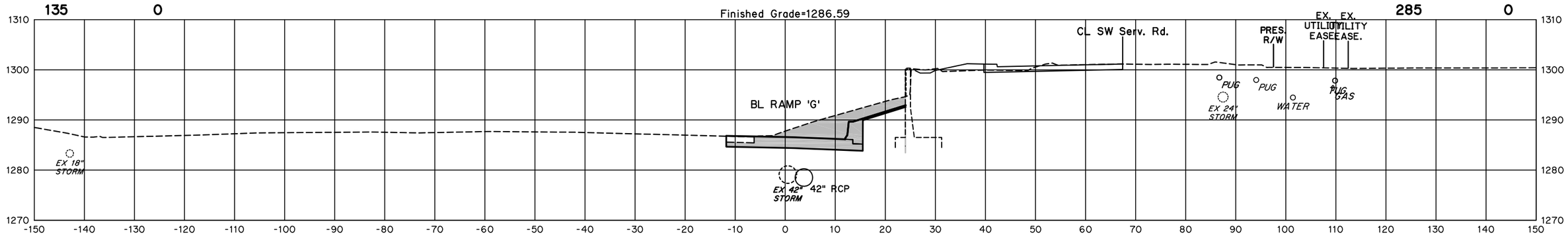

444+00.00

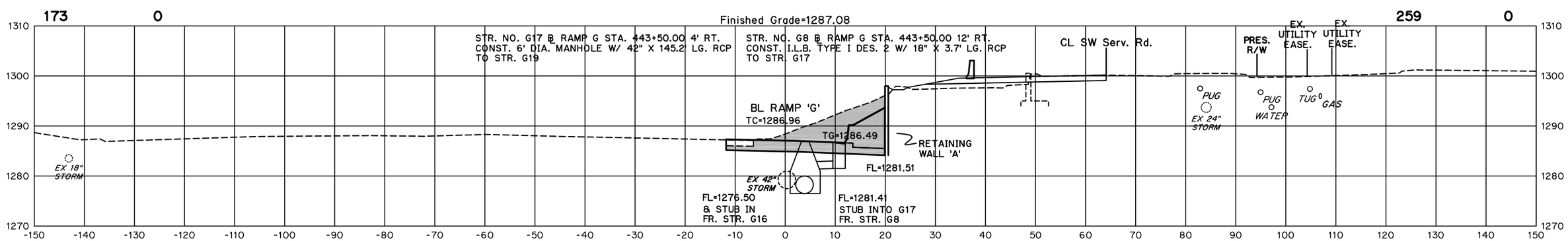

443+50.00

RAMP 'G'

I-35/I-240 INTERCHANGE

STATE JOB NO. 09032(17)

OKLAHOMA COUNTY SHEET NO. X41

SEPT 13, 2016 - 15:17:09
H:\PROJECTS\2789_CrossRoads_InterX_New\PHASE IA\Roadway\Drawings\XSections\XSEC-BL-RAMP G.DWG

Area

Cut Fill

(CAUTION) THE LOCATION OF ALL UTILITIES AS SHOWN ARE APPROXIMATE. DUE TO RELOCATION'S PLANNED OR PRESENTLY UNDER CONSTRUCTION THERE ARE SOME UTILITIES THAT WILL BE RELOCATED AND NOT SHOWN ON THESE PLANS. THE CONTRACTOR SHALL BE RESPONSIBLE FOR ANY DAMAGE TO ALL UTILITIES.

DEPTH & LOCATION OF EXISTING UTILITIES SHALL BE FIELD VERIFIED BY THE CONTRACTOR PRIOR TO CONSTRUCTION.

Volume

Cut Fill

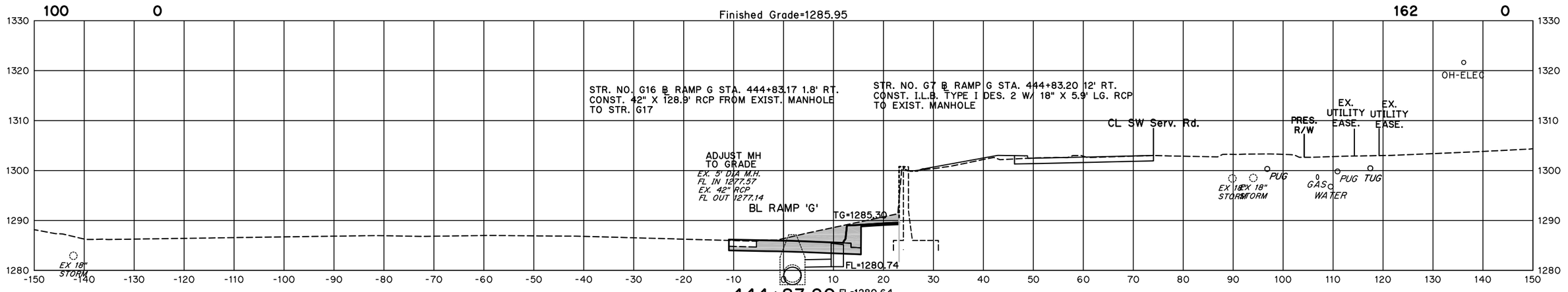

RAMP 'G'

I-35/I-240 INTERCHANGE

STATE JOB NO. 09032(17)

OKLAHOMA COUNTY SHEET NO. X42

SEPT 13, 2016 - 15:17:09
H:\PROJECTS\2789_CrossRoads_InterX_New\PHASE IA\Roadway\Drawings\XSections\XSEC-BL-RAMP G.DWG

(CAUTION) THE LOCATION OF ALL UTILITIES AS SHOWN ARE APPROXIMATE. DUE TO RELOCATION'S PLANNED OR PRESENTLY UNDER CONSTRUCTION THERE ARE SOME UTILITIES THAT WILL BE RELOCATED AND NOT SHOWN ON THESE PLANS. THE CONTRACTOR SHALL BE RESPONSIBLE FOR ANY DAMAGE TO ALL UTILITIES.

DEPTH & LOCATION OF EXISTING UTILITIES SHALL BE FIELD VERIFIED BY THE CONTRACTOR PRIOR TO CONSTRUCTION.

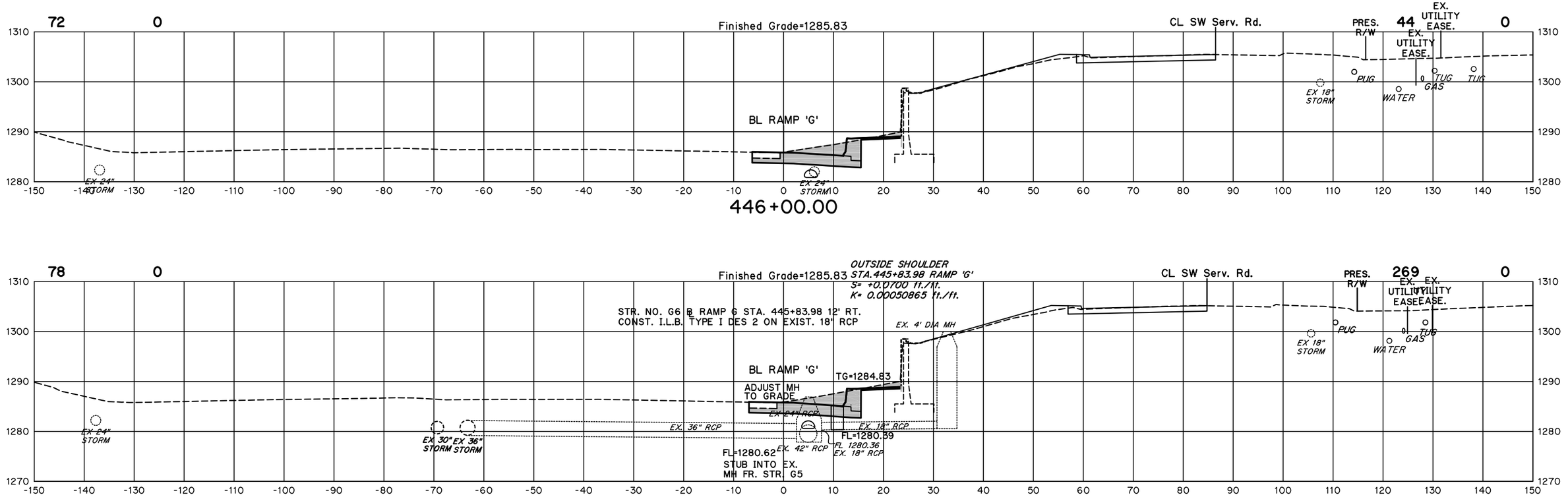

RAMP 'G'

I-35/I-240 INTERCHANGE

STATE JOB NO. 09032(17)

OKLAHOMA COUNTY SHEET NO. X43

SEPT 13, 2016 - 15:17:09
H:\PROJECTS\2789_CrossRoads_InterX_New\PHASE IA\Roadway\Drawings\XSections\XSEC-BL-RAMP G.DWG

Area Cut Fill

(CAUTION) THE LOCATION OF ALL UTILITIES AS SHOWN ARE APPROXIMATE. DUE TO RELOCATION'S PLANNED OR PRESENTLY UNDER CONSTRUCTION THERE ARE SOME UTILITIES THAT WILL BE RELOCATED AND NOT SHOWN ON THESE PLANS. THE CONTRACTOR SHALL BE RESPONSIBLE FOR ANY DAMAGE TO ALL UTILITIES.

DEPTH & LOCATION OF EXISTING UTILITIES SHALL BE FIELD VERIFIED BY THE CONTRACTOR PRIOR TO CONSTRUCTION.

Volume Cut Fill

STR. NO. G4 ℄ I-35 STA. 51+55.63 73.7' LT.
CONST. 24" X 117.7' RCP FROM EX. MANHOLE
TO STR. NO. G3
FL @ EX. MH=1284.53

STR. NO. G1 ℄ I-35 STA. 52+75.00 68.1' LT.
CONST. I.L.B. TYPE I DES. 2 W/ 18" X 4.4' LG. RCP
TO STR. NO. G3
TG=1287.85 FL=1283.63

STR. NO. G3 ℄ I-35 STA. 52+75.00 75.0' LT.
CONST. 4' DIA. MANHOLE W/ 28" X 18" X 186.4' LG
RCPA TO STR. NO. G5
TC=1291.93 FL=1283.08 STUB IN FR. STR. G1=1283.53
STUB IN FR. STR. G4=1283.08

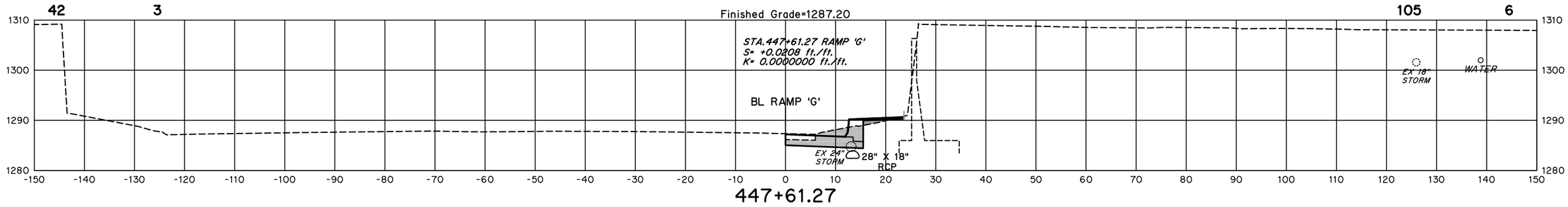

447+61.27

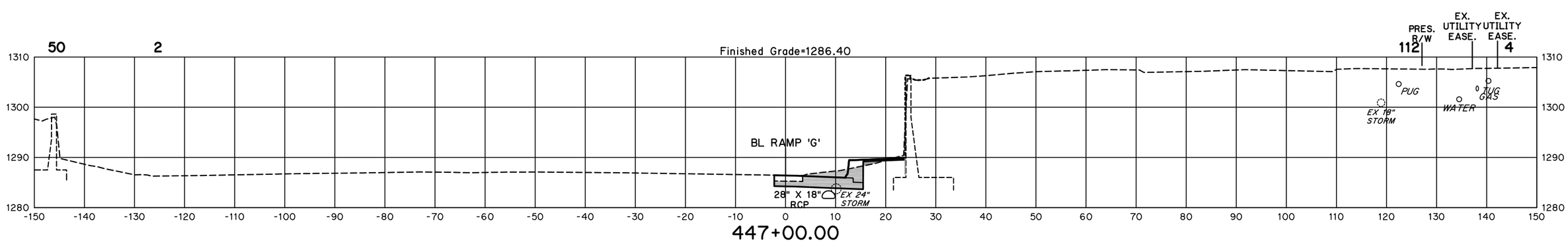

447+00.00

STR. NO. G5 ℄ RAMP G STA. 446+44.12 4.3' RT.
CONST. 4' DIA. MANHOLE W/ 28" X 18" X 55.5' LG
RCPA TO EXIST. MANHOLE @ STA. 445+84.3 5.1' RT.

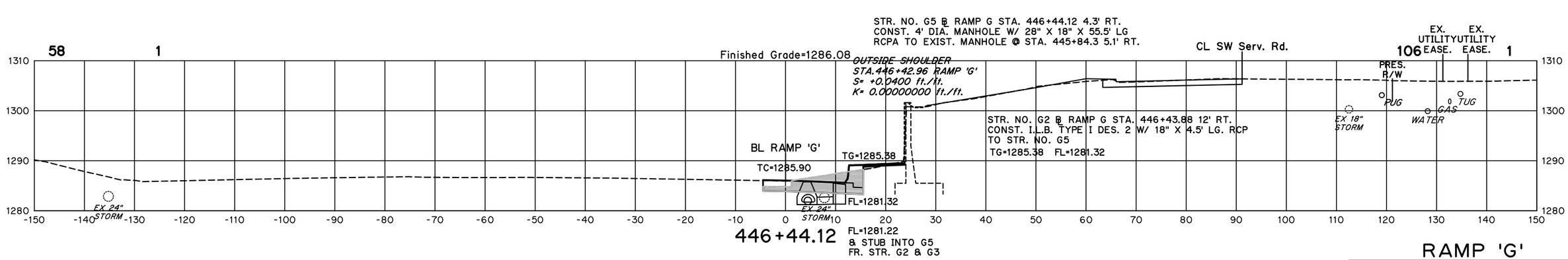

STR. NO. G2 ℄ RAMP G STA. 446+43.88 12' RT.
CONST. I.L.B. TYPE I DES. 2 W/ 18" X 4.5' LG. RCP
TO STR. NO. G5
TG=1285.38 FL=1281.32

446+44.12 FL=1281.22
& STUB INTO G5
FR. STR. G2 & G3

RAMP 'G'

I-35/I-240 INTERCHANGE

STATE JOB NO. 09032(17)
OKLAHOMA COUNTY SHEET NO. X44

SEPT 13, 2016 - 15:17:09
H:\PROJECTS\2789_CrossRoads_InterX_New\PHASE IA\Roadway\Drawings\XSections\XSEC-BL-RAMP G.DWG

Area	
Cut	Fill

(CAUTION) THE LOCATION OF ALL UTILITIES AS SHOWN ARE APPROXIMATE. DUE TO RELOCATION'S PLANNED OR PRESENTLY UNDER CONSTRUCTION THERE ARE SOME UTILITIES THAT WILL BE RELOCATED AND NOT SHOWN ON THESE PLANS. THE CONTRACTOR SHALL BE RESPONSIBLE FOR ANY DAMAGE TO ALL UTILITIES.

DEPTH & LOCATION OF EXISTING UTILITIES SHALL BE FIELD VERIFIED BY THE CONTRACTOR PRIOR TO CONSTRUCTION.

Volume	
Cut	Fill



425+50.00

STA.425+42.29 RAMP 'M'
S= +0.0460 ft./ft.
K= 0.000360000 ft./ft.

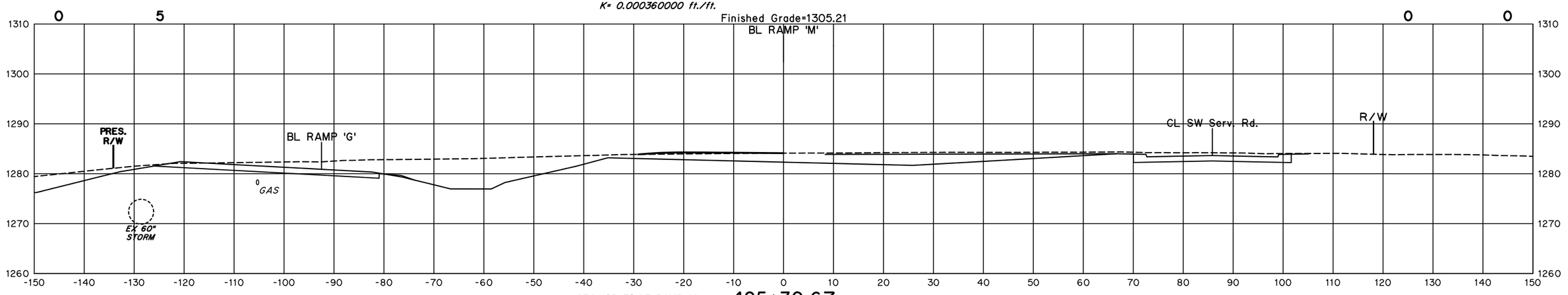

STA.425+30.67 RAMP 'M'
S= +0.0460 ft./ft.
K= 0.000360000 ft./ft.

425+30.67
RAMP 'M'

425+30.67 BEGIN BRIDGE HEADER

RAMP 'M'

I-35/I-240 INTERCHANGE

STATE JOB NO. 09032(17)

OKLAHOMA COUNTY SHEET NO. X45

SEPT 13, 2016 - 15:09:49
H:\PROJECTS\2789_CrossRoads_InterX_New\PHASE IA\Roadway\Drawings\XSections\XSEC-BL-RAMP M.DWG

Area	
Cut	Fill

(CAUTION) THE LOCATION OF ALL UTILITIES AS SHOWN ARE APPROXIMATE. DUE TO RELOCATION'S PLANNED OR PRESENTLY UNDER CONSTRUCTION THERE ARE SOME UTILITIES THAT WILL BE RELOCATED AND NOT SHOWN ON THESE PLANS. THE CONTRACTOR SHALL BE RESPONSIBLE FOR ANY DAMAGE TO ALL UTILITIES.

DEPTH & LOCATION OF EXISTING UTILITIES SHALL BE FIELD VERIFIED BY THE CONTRACTOR PRIOR TO CONSTRUCTION.

Volume	
Cut	Fill

STA.426+14.51 RAMP 'M'
S= 0.0000 ft./ft.
K= 0.000360000 ft./ft.

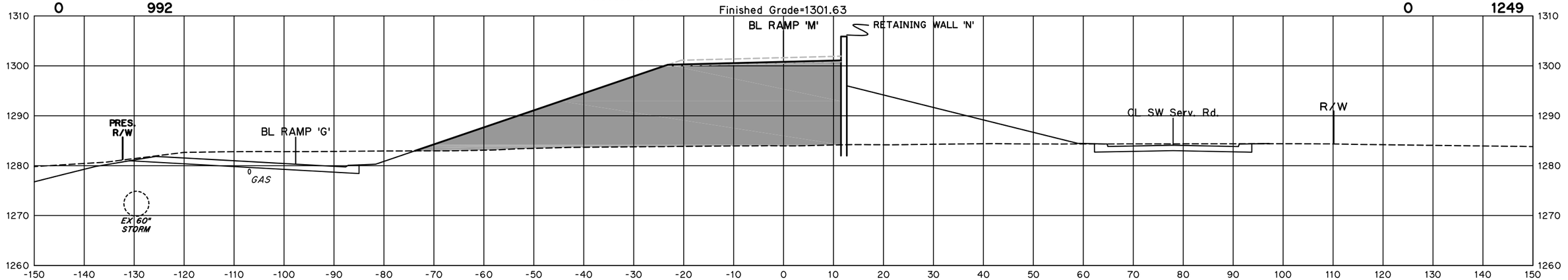

426+00.00

PT STA.425+74.23 RAMP 'M'
S= +0.0345 ft./ft.
K= 0.000360000 ft./ft.

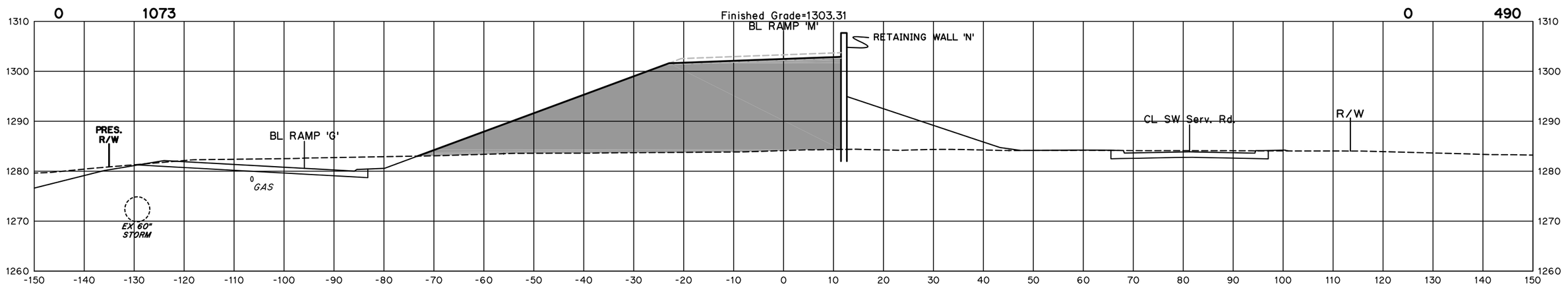

P.T. STA.434+05.15 RAMP 'G'
S= +0.0420 ft./ft.
K= 0.0002778 ft./ft.

425+67.34

RAMP 'M'

STA. 425+67.34 END BRIDGE 'M' (FUTURE) BEG. GRADING

RAMP 'M'

I-35/I-240 INTERCHANGE

STATE JOB NO. 09032(17)

OKLAHOMA COUNTY SHEET NO. X46

SEPT 13, 2016 - 15:09:49
H:\PROJECTS\2789_CrossRoads_InterX_New\PHASE IA\Roadway\Drawings\XSections\XSEC-BL-RAMP M.DWG

Area		Volume	
Cut	Fill	Cut	Fill

(CAUTION) THE LOCATION OF ALL UTILITIES AS SHOWN ARE APPROXIMATE. DUE TO RELOCATION'S PLANNED OR PRESENTLY UNDER CONSTRUCTION THERE ARE SOME UTILITIES THAT WILL BE RELOCATED AND NOT SHOWN ON THESE PLANS. THE CONTRACTOR SHALL BE RESPONSIBLE FOR ANY DAMAGE TO ALL UTILITIES.

DEPTH & LOCATION OF EXISTING UTILITIES SHALL BE FIELD VERIFIED BY THE CONTRACTOR PRIOR TO CONSTRUCTION.

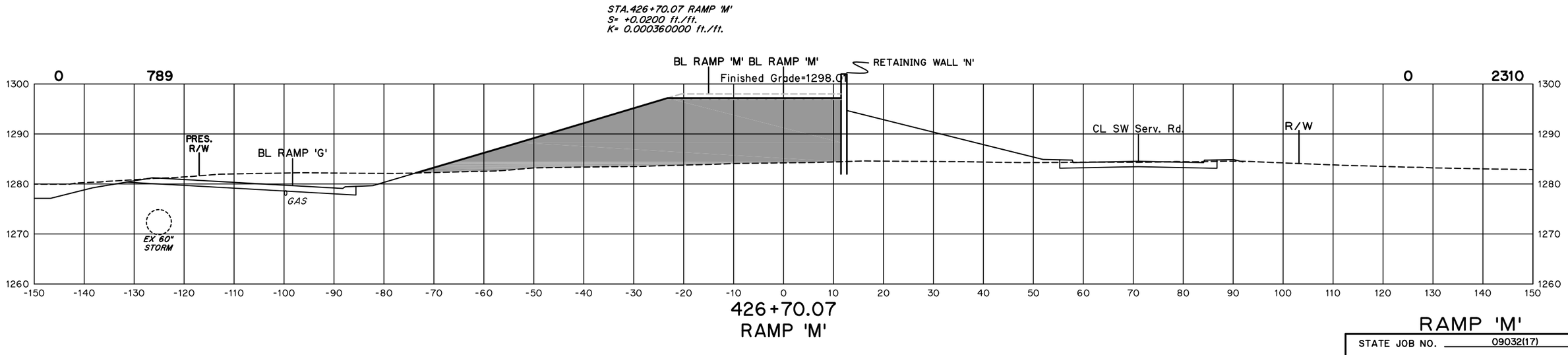

426+70.07
RAMP 'M'

RAMP 'M'

I-35/I-240 INTERCHANGE

STATE JOB NO. 09032(17)

OKLAHOMA COUNTY SHEET NO. X47

SEPT 13, 2016 - 15:09:49
H:\PROJECTS\2789_CrossRoads_InterX_New\PHASE IA\Roadway\Drawings\XSections\XSEC-BL-RAMP M.DWG

(CAUTION) THE LOCATION OF ALL UTILITIES AS SHOWN ARE APPROXIMATE. DUE TO RELOCATION'S PLANNED OR PRESENTLY UNDER CONSTRUCTION THERE ARE SOME UTILITIES THAT WILL BE RELOCATED AND NOT SHOWN ON THESE PLANS. THE CONTRACTOR SHALL BE RESPONSIBLE FOR ANY DAMAGE TO ALL UTILITIES.

DEPTH & LOCATION OF EXISTING UTILITIES SHALL BE FIELD VERIFIED BY THE CONTRACTOR PRIOR TO CONSTRUCTION.

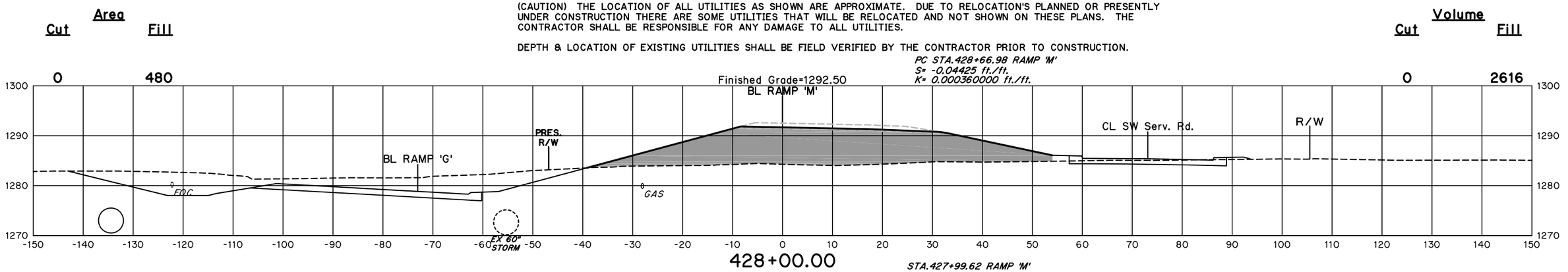

RAMP 'M'

I-35/I-240 INTERCHANGE

STATE JOB NO. 09032(17)

OKLAHOMA COUNTY SHEET NO. X48

SEPT 13, 2016 - 15:09:49
H:\PROJECTS\2789_CrossRoads_InterX_New\PHASE IA\Roadway\Drawings\XSections\XSEC-BL-RAMP M.DWG

Area
Cut Fill

(CAUTION) THE LOCATION OF ALL UTILITIES AS SHOWN ARE APPROXIMATE. DUE TO RELOCATION'S PLANNED OR PRESENTLY UNDER CONSTRUCTION THERE ARE SOME UTILITIES THAT WILL BE RELOCATED AND NOT SHOWN ON THESE PLANS. THE CONTRACTOR SHALL BE RESPONSIBLE FOR ANY DAMAGE TO ALL UTILITIES.

DEPTH & LOCATION OF EXISTING UTILITIES SHALL BE FIELD VERIFIED BY THE CONTRACTOR PRIOR TO CONSTRUCTION.

Volume
Cut Fill

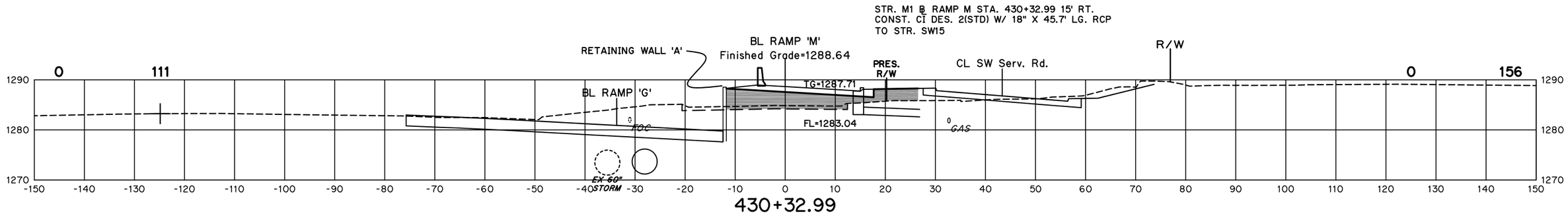

430+32.99

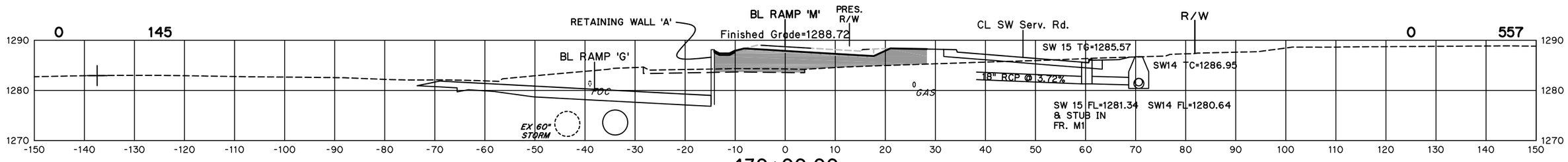

430+00.00
BEGIN PAVING

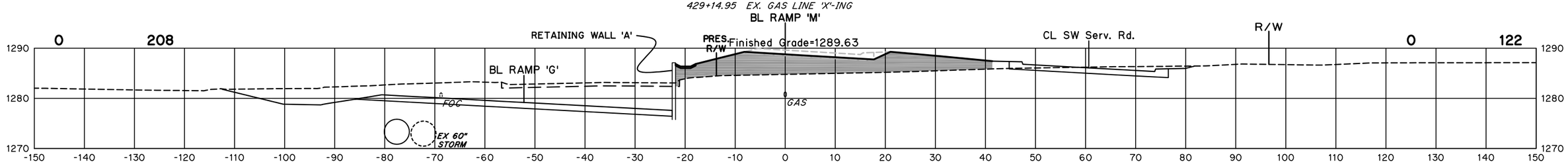

429+14.95

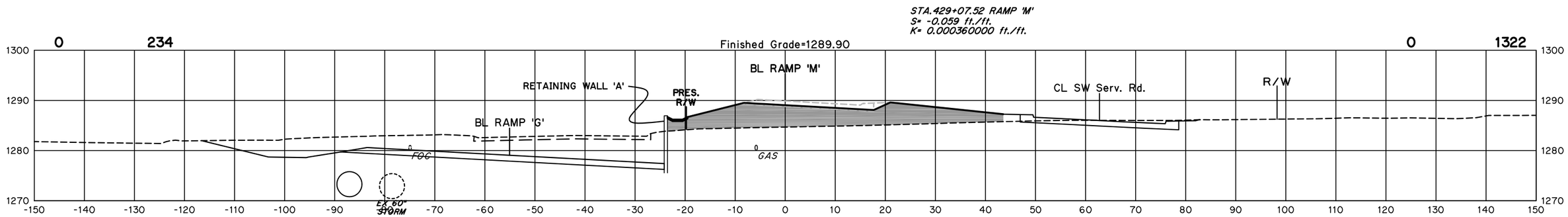

429+00.00
RAMP 'M'

RAMP 'M'

I-35/I-240 INTERCHANGE

STATE JOB NO. 09032(17)
OKLAHOMA COUNTY SHEET NO. X49

SEPT 13, 2016 - 15:09:49
H:\PROJECTS\2789_CrossRoads_InterX_New\PHASE IA\Roadway\Drawings\XSections\XSEC-BL-RAMP M.DWG

Area
Cut Fill

(CAUTION) THE LOCATION OF ALL UTILITIES AS SHOWN ARE APPROXIMATE. DUE TO RELOCATION'S PLANNED OR PRESENTLY UNDER CONSTRUCTION THERE ARE SOME UTILITIES THAT WILL BE RELOCATED AND NOT SHOWN ON THESE PLANS. THE CONTRACTOR SHALL BE RESPONSIBLE FOR ANY DAMAGE TO ALL UTILITIES.

DEPTH & LOCATION OF EXISTING UTILITIES SHALL BE FIELD VERIFIED BY THE CONTRACTOR PRIOR TO CONSTRUCTION.

Volume
Cut Fill

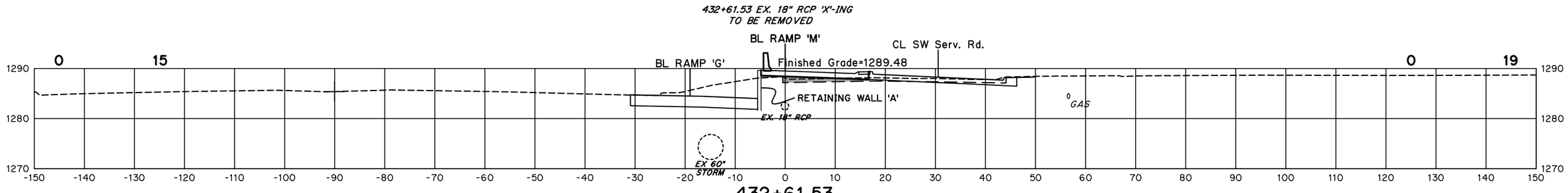

432+61.53

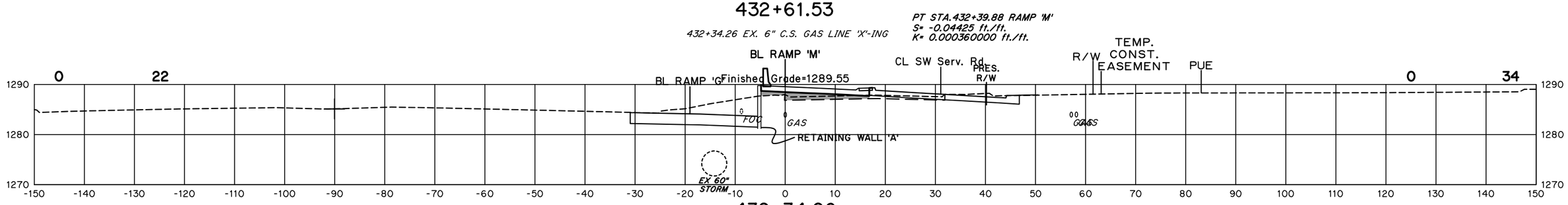

432+34.26

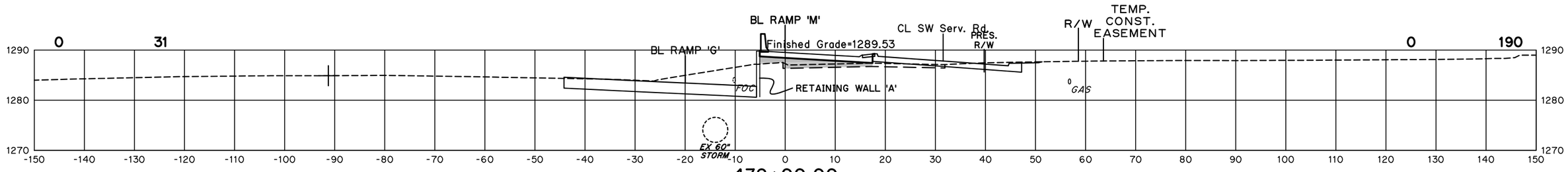

432+00.00

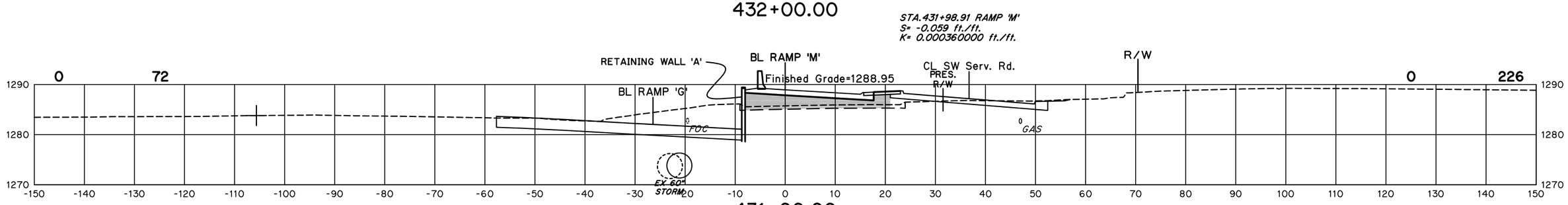

431+00.00
RAMP 'M'

RAMP 'M'

I-35/I-240 INTERCHANGE

STATE JOB NO. 09032(17)
OKLAHOMA COUNTY SHEET NO. X50

SEPT 13, 2016 - 15:09:49
H:\PROJECTS\2789_CrossRoads_InterX_New\PHASE IA\Roadway\Drawings\XSections\XSEC-BL-RAMP M.DWG

Area

Cut **Fill**

(CAUTION) THE LOCATION OF ALL UTILITIES AS SHOWN ARE APPROXIMATE. DUE TO RELOCATION'S PLANNED OR PRESENTLY UNDER CONSTRUCTION THERE ARE SOME UTILITIES THAT WILL BE RELOCATED AND NOT SHOWN ON THESE PLANS. THE CONTRACTOR SHALL BE RESPONSIBLE FOR ANY DAMAGE TO ALL UTILITIES.

DEPTH & LOCATION OF EXISTING UTILITIES SHALL BE FIELD VERIFIED BY THE CONTRACTOR PRIOR TO CONSTRUCTION.

Volume

Cut **Fill**

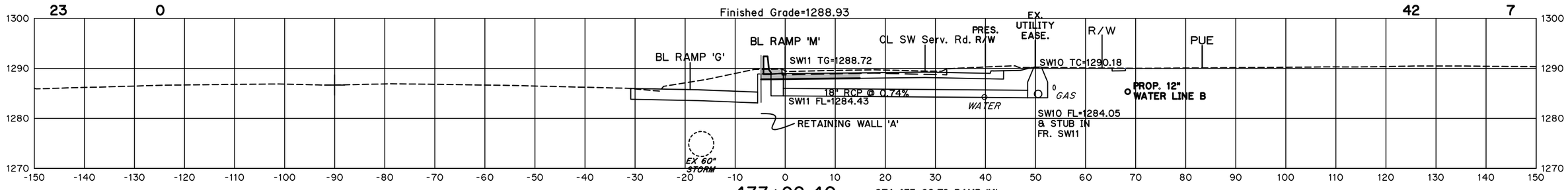

433+92.40

STA.433+62.79 RAMP 'M'
S= 0.0000 ft./ft.
K= 0.000360000 ft./ft.

STA.433+07.33 RAMP 'M'
S= -0.0200 ft./ft.
K= 0.000360000 ft./ft.

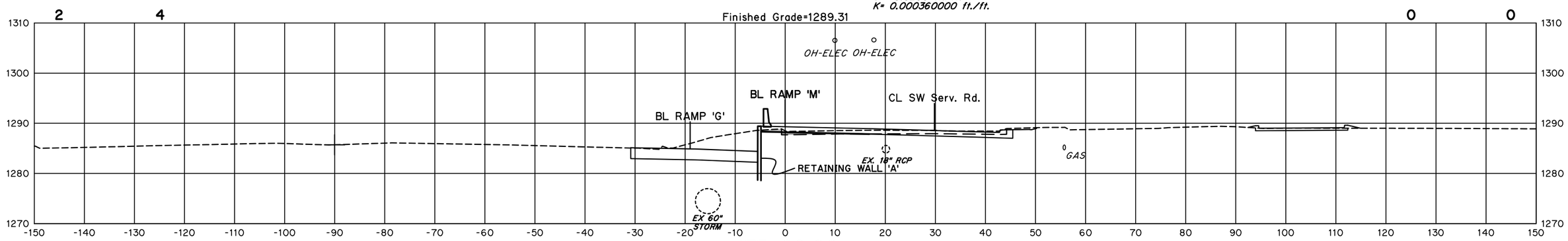

433+00.00

432+98.43 2-O.H. POWER 'X'-ING

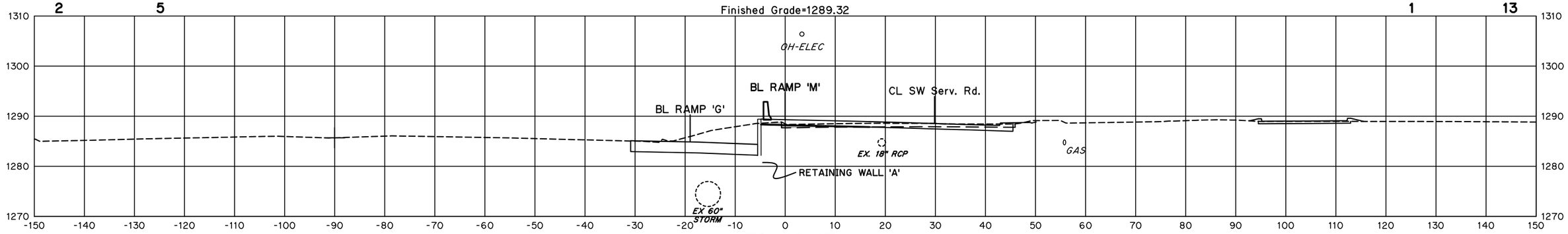

432+98.43
RAMP 'M'

RAMP 'M'

I-35/I-240 INTERCHANGE

STATE JOB NO. 09032(17)

OKLAHOMA COUNTY SHEET NO. X51

SEPT 13, 2016 - 15:09:49
H:\PROJECTS\2789_CrossRoads_InterX_New\PHASE IA\Roadway\Drawings\XSections\XSEC-BL-RAMP M.DWG

(CAUTION) THE LOCATION OF ALL UTILITIES AS SHOWN ARE APPROXIMATE. DUE TO RELOCATION'S PLANNED OR PRESENTLY UNDER CONSTRUCTION THERE ARE SOME UTILITIES THAT WILL BE RELOCATED AND NOT SHOWN ON THESE PLANS. THE CONTRACTOR SHALL BE RESPONSIBLE FOR ANY DAMAGE TO ALL UTILITIES.

DEPTH & LOCATION OF EXISTING UTILITIES SHALL BE FIELD VERIFIED BY THE CONTRACTOR PRIOR TO CONSTRUCTION.

Area		Volume	
Cut	Fill	Cut	Fill
19	0	17	0

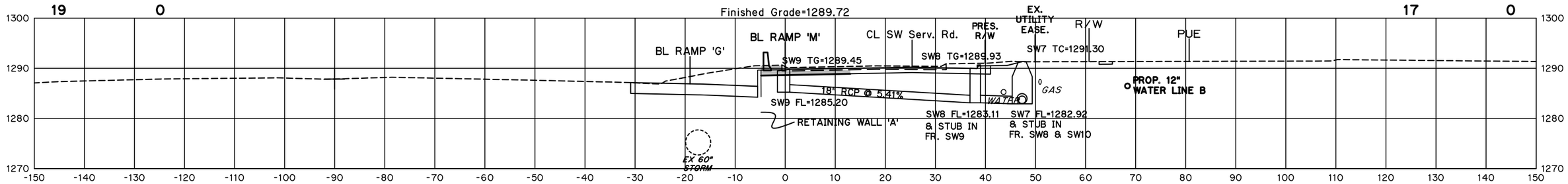

435+22.43

21	0	83	0

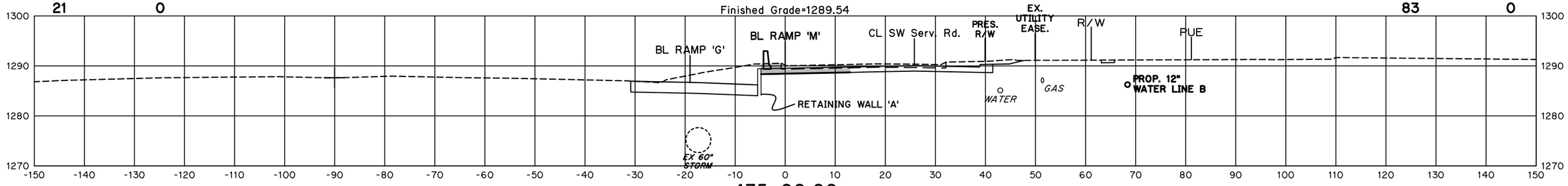

435+00.00

STA.434+18.35 RAMP 'M'
S= +0.0200 ft./ft.
K= 0.000360000 ft./ft.

24	0	7	0

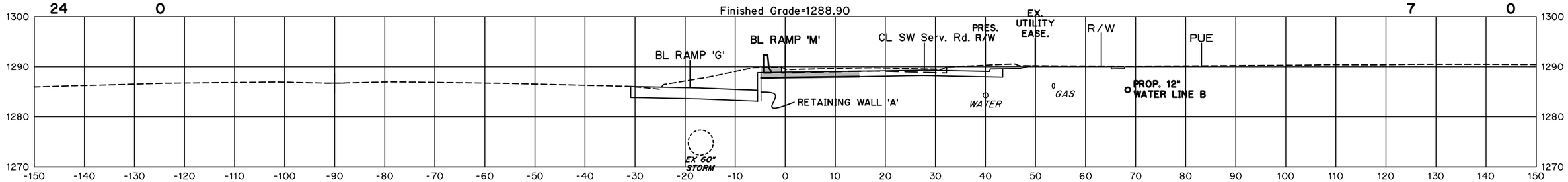

434+00.00

RAMP 'M'

RAMP 'M'

I-35/I-240 INTERCHANGE

STATE JOB NO. 09032(17)

OKLAHOMA COUNTY SHEET NO. X52

SEPT 13, 2016 - 15:09:49
H:\PROJECTS\2789_CrossRoads_InterX_New\PHASE IA\Roadway\Drawings\XSections\XSEC-BL-RAMP M.DWG

Area		Volume	
Cut	Fill	Cut	Fill

(CAUTION) THE LOCATION OF ALL UTILITIES AS SHOWN ARE APPROXIMATE. DUE TO RELOCATION'S PLANNED OR PRESENTLY UNDER CONSTRUCTION THERE ARE SOME UTILITIES THAT WILL BE RELOCATED AND NOT SHOWN ON THESE PLANS. THE CONTRACTOR SHALL BE RESPONSIBLE FOR ANY DAMAGE TO ALL UTILITIES.

DEPTH & LOCATION OF EXISTING UTILITIES SHALL BE FIELD VERIFIED BY THE CONTRACTOR PRIOR TO CONSTRUCTION.

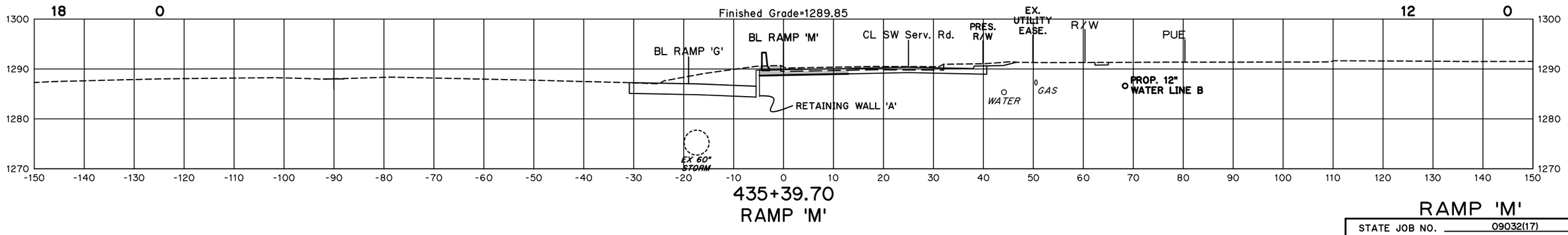

435+39.70
RAMP 'M'

RAMP 'M'

I-35/I-240 INTERCHANGE

STATE JOB NO. 09032(17)

OKLAHOMA COUNTY SHEET NO. X53

SEPT 13, 2016 - 15:09:49
H:\PROJECTS\2789_CrossRoads_InterX_New\PHASE IA\Roadway\Drawings\XSections\XSEC-BL-RAMP M.DWG

Area	
Cut	Fill

(CAUTION) THE LOCATION OF ALL UTILITIES AS SHOWN ARE APPROXIMATE. DUE TO RELOCATION'S PLANNED OR PRESENTLY UNDER CONSTRUCTION THERE ARE SOME UTILITIES THAT WILL BE RELOCATED AND NOT SHOWN ON THESE PLANS. THE CONTRACTOR SHALL BE RESPONSIBLE FOR ANY DAMAGE TO ALL UTILITIES.

DEPTH & LOCATION OF EXISTING UTILITIES SHALL BE FIELD VERIFIED BY THE CONTRACTOR PRIOR TO CONSTRUCTION.

Volume	
Cut	Fill

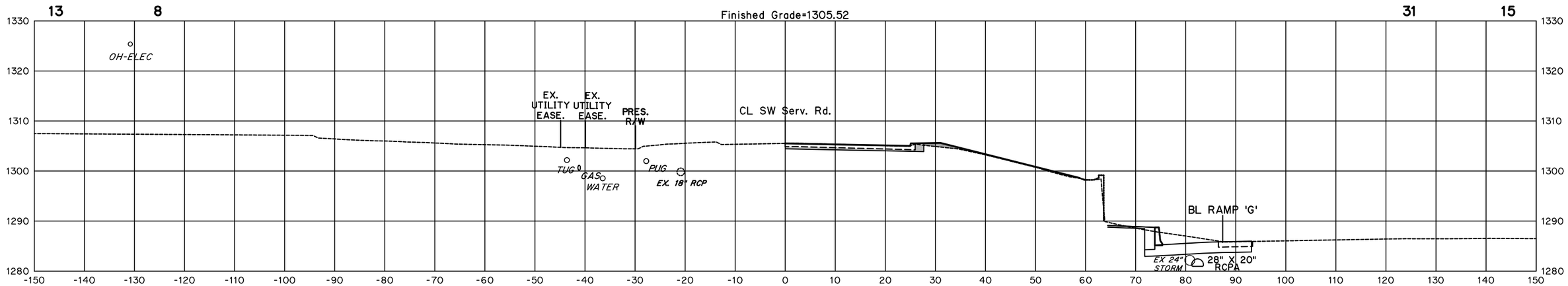

55+00.00

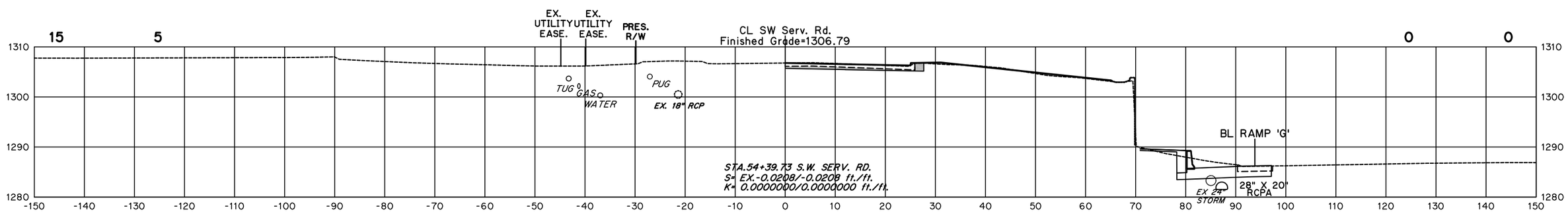

54+39.73

S.W. SERVICE RD.

S.W. SERVICE RD.

I-35/I-240 INTERCHANGE

STATE JOB NO. 09032(17)

OKLAHOMA COUNTY SHEET NO. X54

SEPT 13, 2016 - 14:35:60
H:\PROJECTS\2789_CrossRoads_InterX_New\PHASE IA\Roadway\Drawings\XSections\XSEC-CL-SWSERVRD-REV.DWG

Area

Cut **Fill**

(CAUTION) THE LOCATION OF ALL UTILITIES AS SHOWN ARE APPROXIMATE. DUE TO RELOCATION'S PLANNED OR PRESENTLY UNDER CONSTRUCTION THERE ARE SOME UTILITIES THAT WILL BE RELOCATED AND NOT SHOWN ON THESE PLANS. THE CONTRACTOR SHALL BE RESPONSIBLE FOR ANY DAMAGE TO ALL UTILITIES.

DEPTH & LOCATION OF EXISTING UTILITIES SHALL BE FIELD VERIFIED BY THE CONTRACTOR PRIOR TO CONSTRUCTION.

Volume

Cut **Fill**

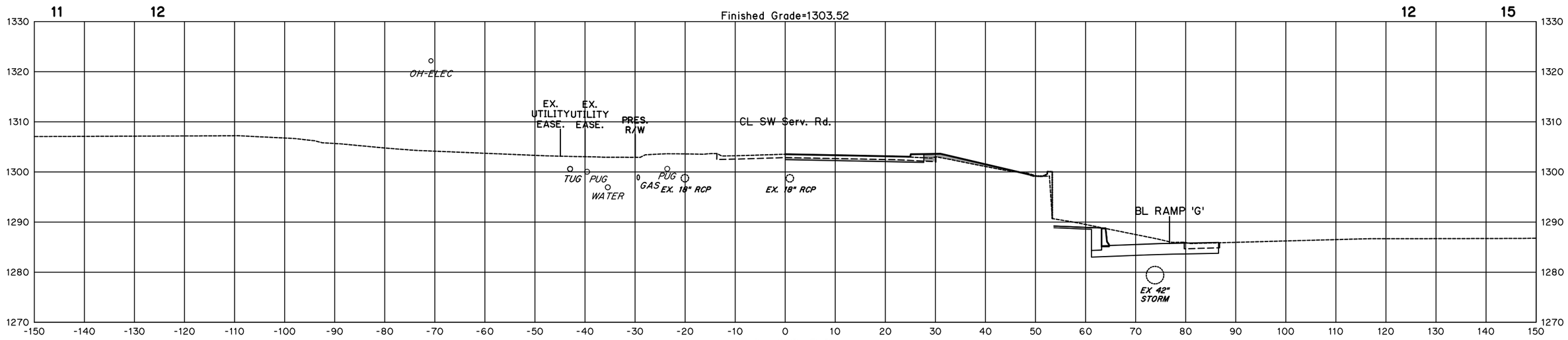

56+00.00

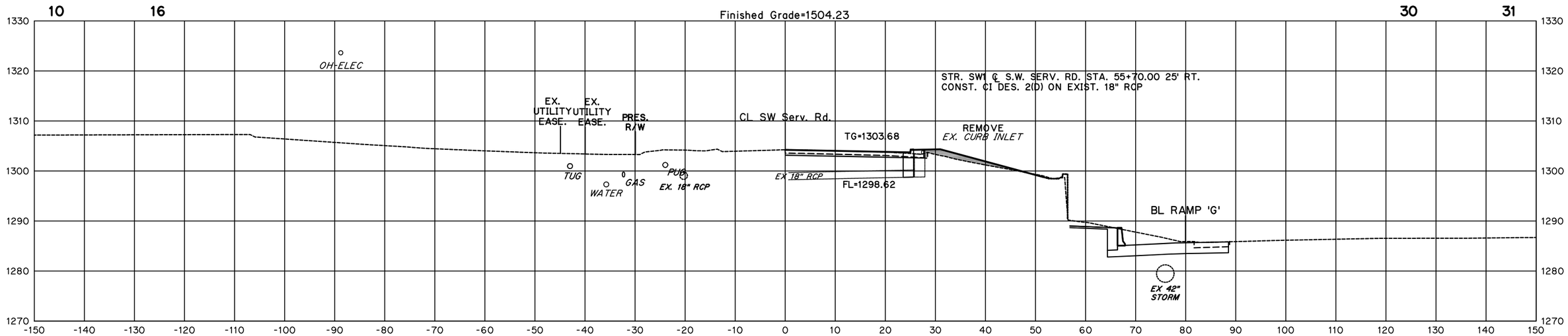

55+70.00

S.W. SERVICE RD.

S.W. SERVICE RD.

I-35/I-240 INTERCHANGE

STATE JOB NO. 09032(17)

OKLAHOMA COUNTY SHEET NO. X55

SEPT 13, 2016 - 14:35:60
H:\PROJECTS\2789_CrossRoads_InterX_New\PHASE IA\Roadway\Drawings\XSections\XSEC-CL-SWSERVRD-REV.DWG

Area

Cut Fill

(CAUTION) THE LOCATION OF ALL UTILITIES AS SHOWN ARE APPROXIMATE. DUE TO RELOCATION'S PLANNED OR PRESENTLY UNDER CONSTRUCTION THERE ARE SOME UTILITIES THAT WILL BE RELOCATED AND NOT SHOWN ON THESE PLANS. THE CONTRACTOR SHALL BE RESPONSIBLE FOR ANY DAMAGE TO ALL UTILITIES.

DEPTH & LOCATION OF EXISTING UTILITIES SHALL BE FIELD VERIFIED BY THE CONTRACTOR PRIOR TO CONSTRUCTION.

Volume

Cut Fill

56+65.61 O.H. POWER 'X'-ING

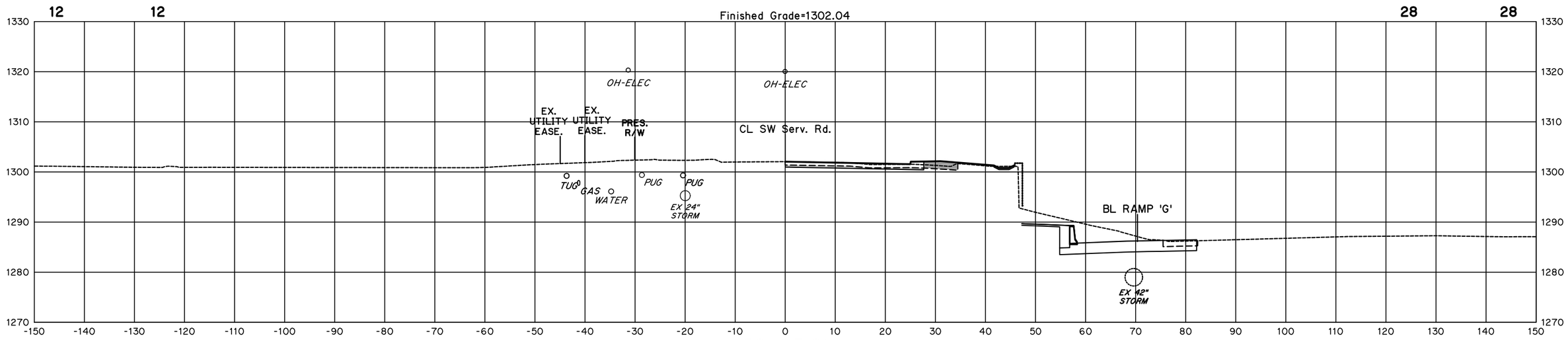

56+65.61

56+01.32 18" RCP "X"-ING

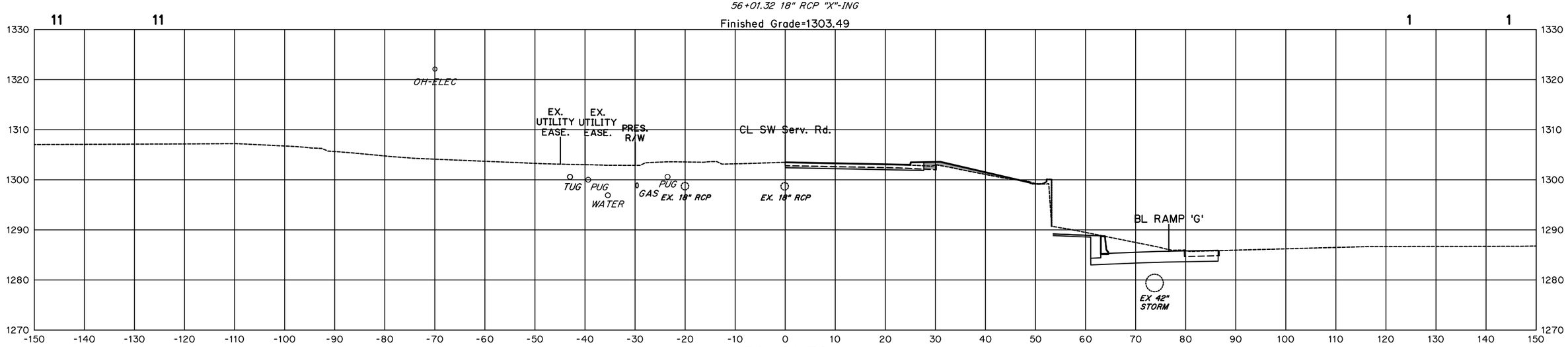

56+01.32

S.W. SERVICE RD.

S.W. SERVICE RD.

I-35/I-240 INTERCHANGE

STATE JOB NO. 09032(17)

OKLAHOMA COUNTY SHEET NO. X56

SEPT 13, 2016 - 14:35:60
H:\PROJECTS\2789_CrossRoads_InterX_New\PHASE IA\Roadway\Drawings\XSections\XSEC-CL-SWSERVRD-REV.DWG

Area Cut Fill

(CAUTION) THE LOCATION OF ALL UTILITIES AS SHOWN ARE APPROXIMATE. DUE TO RELOCATION'S PLANNED OR PRESENTLY UNDER CONSTRUCTION THERE ARE SOME UTILITIES THAT WILL BE RELOCATED AND NOT SHOWN ON THESE PLANS. THE CONTRACTOR SHALL BE RESPONSIBLE FOR ANY DAMAGE TO ALL UTILITIES.

DEPTH & LOCATION OF EXISTING UTILITIES SHALL BE FIELD VERIFIED BY THE CONTRACTOR PRIOR TO CONSTRUCTION.

Volume Cut Fill

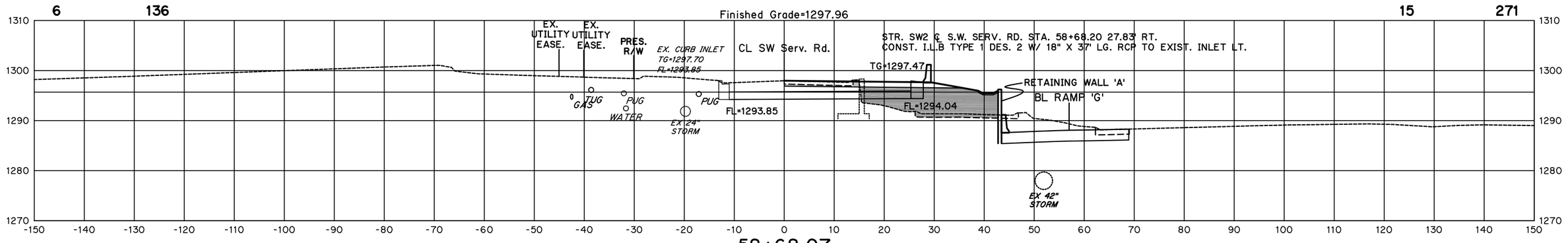

58+68.07

STA.58+35.87 S.W. SERV. RD.
S= EX.-0.0208/-0.0208 ft./ft.
K= 0.0000000/0.0003093 ft./ft.

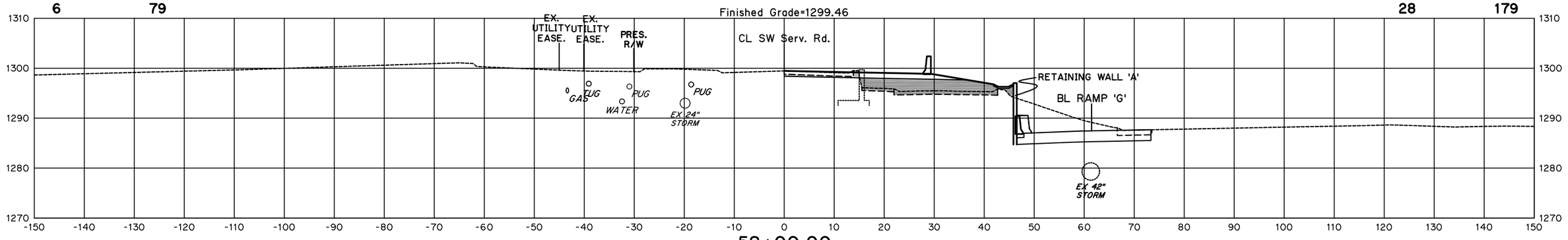

58+00.00

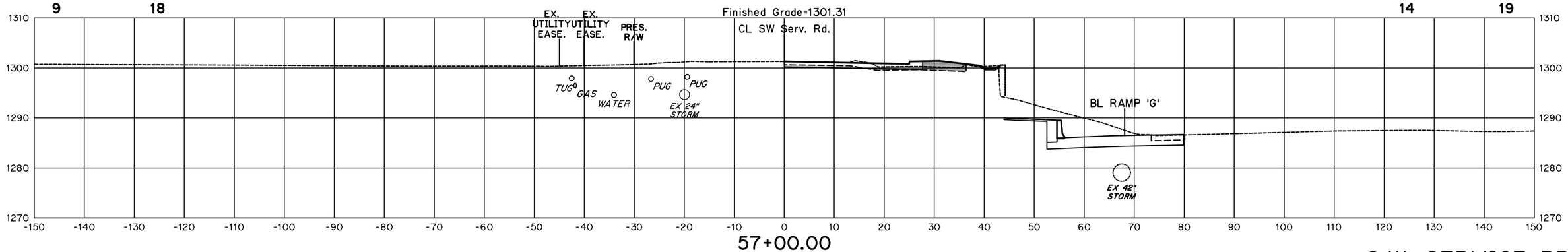

57+00.00

S.W. SERVICE RD.

S.W. SERVICE RD.

I-35/I-240 INTERCHANGE

STATE JOB NO. 09032(17)

OKLAHOMA COUNTY SHEET NO. X57

SEPT 13, 2016 - 14:35:60
H:\PROJECTS\2789_CrossRoads_InterX_New\PHASE IA\Roadway\Drawings\XSections\XSEC-CL-SWSERVRD-REV.DWG

Area	
Cut	Fill

(CAUTION) THE LOCATION OF ALL UTILITIES AS SHOWN ARE APPROXIMATE. DUE TO RELOCATION'S PLANNED OR PRESENTLY UNDER CONSTRUCTION THERE ARE SOME UTILITIES THAT WILL BE RELOCATED AND NOT SHOWN ON THESE PLANS. THE CONTRACTOR SHALL BE RESPONSIBLE FOR ANY DAMAGE TO ALL UTILITIES.

DEPTH & LOCATION OF EXISTING UTILITIES SHALL BE FIELD VERIFIED BY THE CONTRACTOR PRIOR TO CONSTRUCTION.

Volume	
Cut	Fill

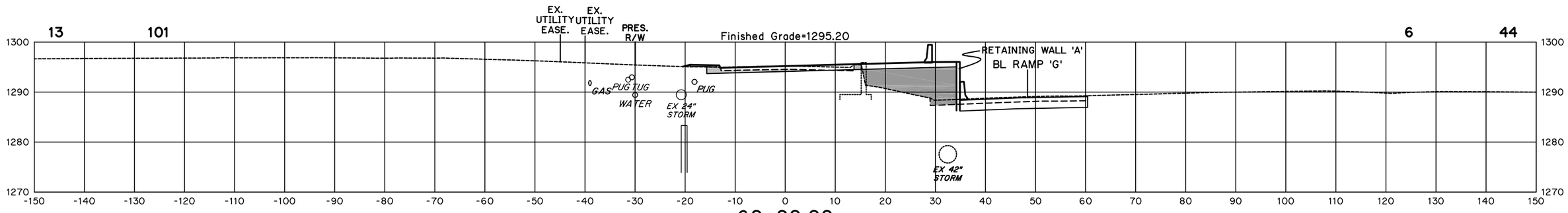

60+00.00

STA.59+90.39 S.W. SERV. RD.
S= -0.0270/+0.0270 ft./ft.
K= 0.0000000/0.0000000 ft./ft.

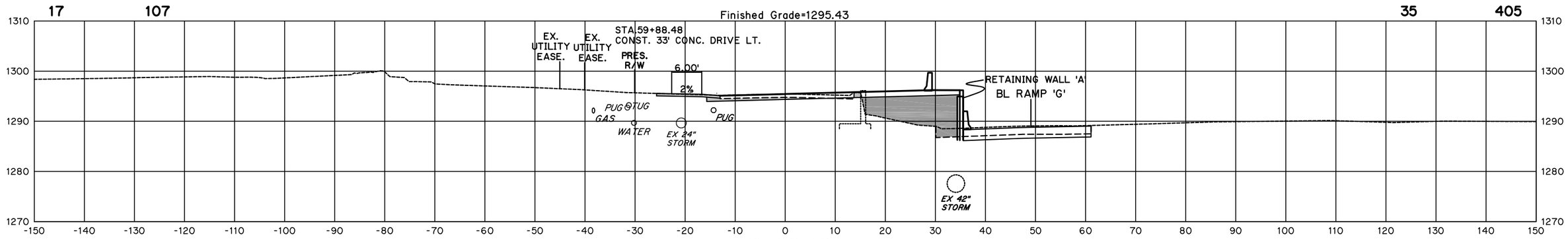

59+88.48

STA.59+70.19 S.W. SERV. RD.
S= -0.0208/+0.0208 ft./ft.
K= 0.0003093/0.0003093 ft./ft.

STA.59+03.11 S.W. SERV. RD.
S= EX.-0.0208/0.0000 ft./ft.
K= 0.0000000/0.0003093 ft./ft.

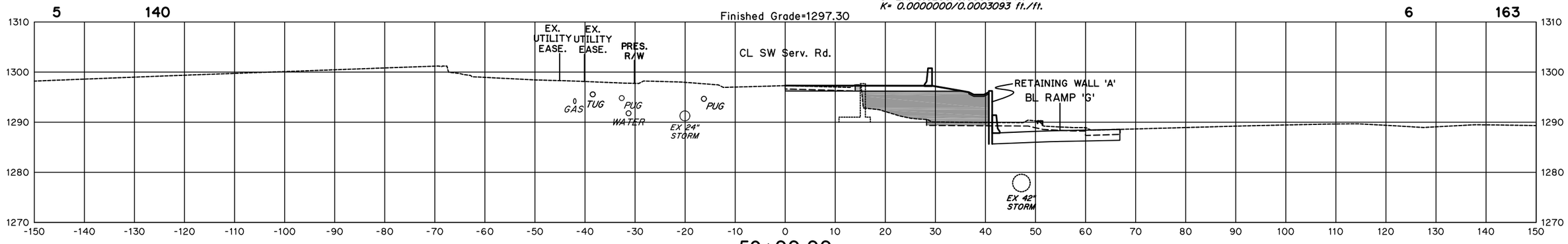

59+00.00

S.W. SERVICE RD.

S.W. SERVICE RD.

I-35/I-240 INTERCHANGE

STATE JOB NO. 09032(17)

OKLAHOMA COUNTY SHEET NO. X58

SEPT 13, 2016 - 14:35:60
H:\PROJECTS\2789_CrossRoads_InterX_New\PHASE IA\Roadway\Drawings\XSections\XSEC-CL-SWSERVRD-REV.DWG

(CAUTION) THE LOCATION OF ALL UTILITIES AS SHOWN ARE APPROXIMATE. DUE TO RELOCATION'S PLANNED OR PRESENTLY UNDER CONSTRUCTION THERE ARE SOME UTILITIES THAT WILL BE RELOCATED AND NOT SHOWN ON THESE PLANS. THE CONTRACTOR SHALL BE RESPONSIBLE FOR ANY DAMAGE TO ALL UTILITIES.

DEPTH & LOCATION OF EXISTING UTILITIES SHALL BE FIELD VERIFIED BY THE CONTRACTOR PRIOR TO CONSTRUCTION.

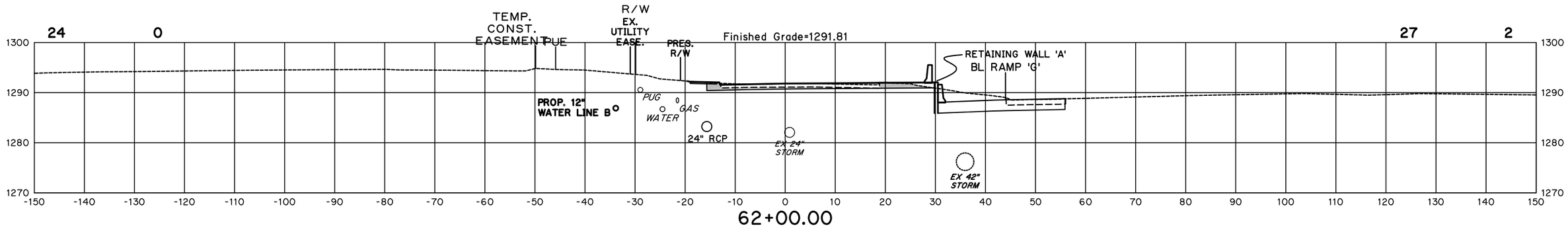

62+00.00

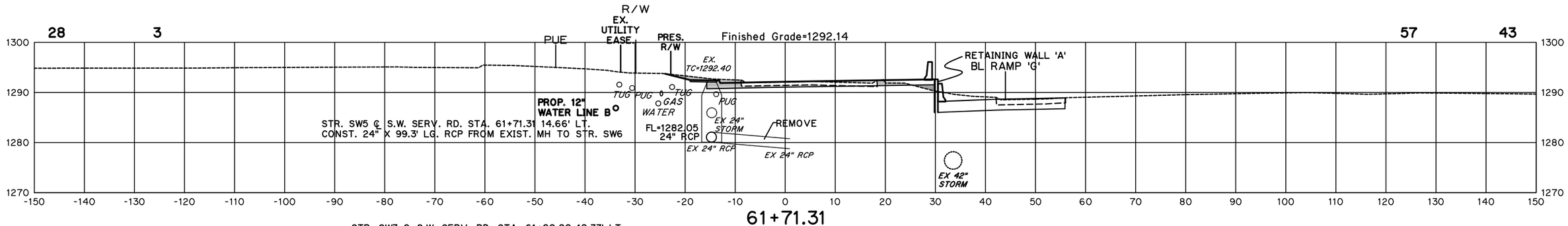

61+71.31

STR. SW5 ℄ S.W. SERV. RD. STA. 61+71.31 14.66' LT.
CONST. 24" X 99.3' LG. RCP FROM EXIST. MH TO STR. SW6

STR. SW3 ℄ S.W. SERV. RD. STA. 61+00.00 18.33' LT.
CONST. 4' DIA. MANHOLE ON EXIST. 24" RCP

STR. SW4 ℄ S.W. SERV. RD. STA. 61+00.00 13' LT.
CONST. CI DES. 3(D) W/ 18" X 2.9' LG. RCP
TO STR. SW3

STA.61+35.72 S.W. SERV. RD.
S= -0.0270/+0.0270 ft./ft.
K= 0.0003093/0.0003093 ft./ft.

STA.61+58.34 S.W. SERV. RD.
S= -0.0200/+0.0200 ft./ft.
K= 0.0000000/0.0003093 ft./ft.

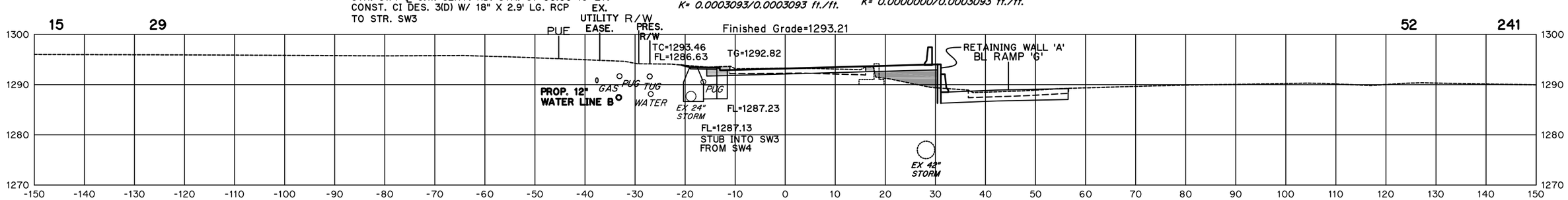

61+00.00

S.W. SERVICE RD.

S.W. SERVICE RD.

I-35/I-240 INTERCHANGE

STATE JOB NO. 09032(17)

OKLAHOMA COUNTY SHEET NO. X59

SEPT 13, 2016 - 14:35:60
H:\PROJECTS\2789_CrossRoads_InterX_New\PHASE IA\Roadway\Drawings\XSections\XSEC-CL-SWSERVRD-REV.DWG

Area
Cut Fill

(CAUTION) THE LOCATION OF ALL UTILITIES AS SHOWN ARE APPROXIMATE. DUE TO RELOCATION'S PLANNED OR PRESENTLY UNDER CONSTRUCTION THERE ARE SOME UTILITIES THAT WILL BE RELOCATED AND NOT SHOWN ON THESE PLANS. THE CONTRACTOR SHALL BE RESPONSIBLE FOR ANY DAMAGE TO ALL UTILITIES.

DEPTH & LOCATION OF EXISTING UTILITIES SHALL BE FIELD VERIFIED BY THE CONTRACTOR PRIOR TO CONSTRUCTION.

Volume
Cut Fill

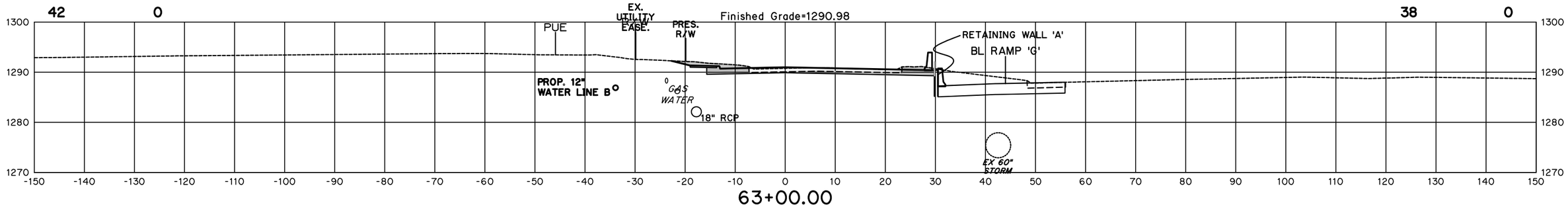

63+00.00

STR. SW6 ℄ S.W. SERV. RD. STA. 62+74.00 18.11' LT.
CONST. 4.0' DIA. MANHOLE W/ 30" X 47.9' LG. RCP
TO STR. G11

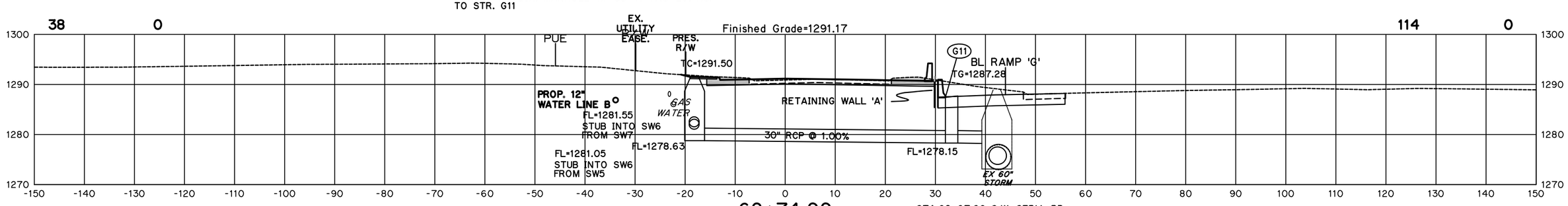

62+74.00

STA.62+67.66 S.W. SERV. RD.
S= -0.0200/-0.0200 ft./ft.
K= 0.0000000/0.0000000 ft./ft.

STA.62+23.00 S.W. SERV. RD.
S= -0.0200/0.0000 ft./ft.
K= 0.0000000/0.0003093 ft./ft.

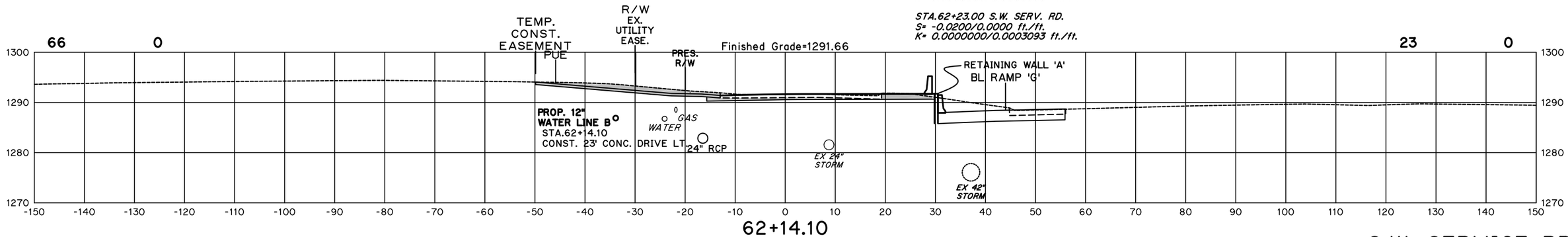

62+14.10
S.W. SERVICE RD.

S.W. SERVICE RD.

I-35/I-240 INTERCHANGE

STATE JOB NO. 09032(17)
OKLAHOMA COUNTY SHEET NO. X60

SEPT 13, 2016 - 14:35:60
H:\PROJECTS\2789_CrossRoads_InterX_New\PHASE IA\Roadway\Drawings\XSections\XSEC-CL-SWSERVRD-REV.DWG

Area	
Cut	Fill

(CAUTION) THE LOCATION OF ALL UTILITIES AS SHOWN ARE APPROXIMATE. DUE TO RELOCATION'S PLANNED OR PRESENTLY UNDER CONSTRUCTION THERE ARE SOME UTILITIES THAT WILL BE RELOCATED AND NOT SHOWN ON THESE PLANS. THE CONTRACTOR SHALL BE RESPONSIBLE FOR ANY DAMAGE TO ALL UTILITIES.

DEPTH & LOCATION OF EXISTING UTILITIES SHALL BE FIELD VERIFIED BY THE CONTRACTOR PRIOR TO CONSTRUCTION.

Volume	
Cut	Fill

STA.65+13.51 S.W. SERV. RD.
S= -0.0200/-0.0200 ft./ft.
K= 0.0000000/0.0004462 ft./ft.

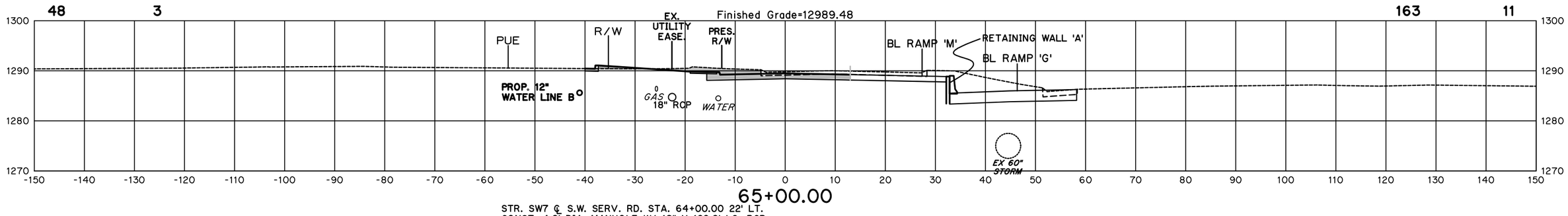

65+00.00

STR. SW7 ℄ S.W. SERV. RD. STA. 64+00.00 22' LT.
CONST. 4.0' DIA. MANHOLE W/ 18" X 122.0' LG. RCP
TO STR. SW6

STR. SW8 ℄ S.W. SERV. RD. STA. 64+00.00 13' LT.
CONST. CI DES. 3(STD)
W/ 18" X 6.5' LG. RCP TO STR. SW7

STR. SW9 ℄ S.W. SERV. RD. STA. 64+00.00 26.9' RT.
CONST. ILB TYPE 1 DES. 2 W/ 18" X 38.6' LG. RCP TO STR. SW8

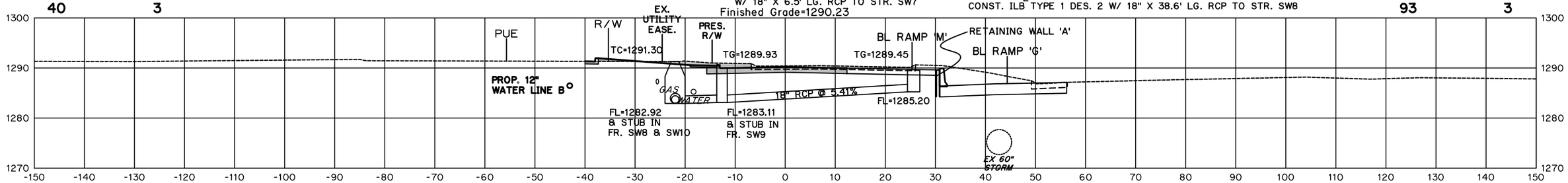

64+00.00

STA.63+57.87
BEGIN 2'-8" CURB & GUTTER

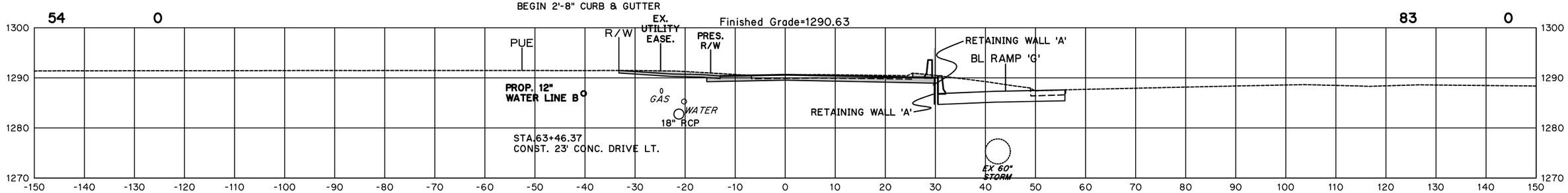

STA.63+46.37
CONST. 23' CONC. DRIVE LT.

63+46.37

S.W. SERVICE RD.

I-35/I-240 INTERCHANGE

S.W. SERVICE RD.

STATE JOB NO. 09032(17)

OKLAHOMA COUNTY SHEET NO. X61

SEPT 13, 2016 - 14:35:60
H:\PROJECTS\2789_CrossRoads_InterX_New\PHASE IA\Roadway\Drawings\XSections\XSEC-CL-SWSERVRD-REV.DWG

Area	
Cut	Fill

(CAUTION) THE LOCATION OF ALL UTILITIES AS SHOWN ARE APPROXIMATE. DUE TO RELOCATION'S PLANNED OR PRESENTLY UNDER CONSTRUCTION THERE ARE SOME UTILITIES THAT WILL BE RELOCATED AND NOT SHOWN ON THESE PLANS. THE CONTRACTOR SHALL BE RESPONSIBLE FOR ANY DAMAGE TO ALL UTILITIES.

DEPTH & LOCATION OF EXISTING UTILITIES SHALL BE FIELD VERIFIED BY THE CONTRACTOR PRIOR TO CONSTRUCTION.

Volume	
Cut	Fill

66+21.30 O.H. POWER 'X'-ING

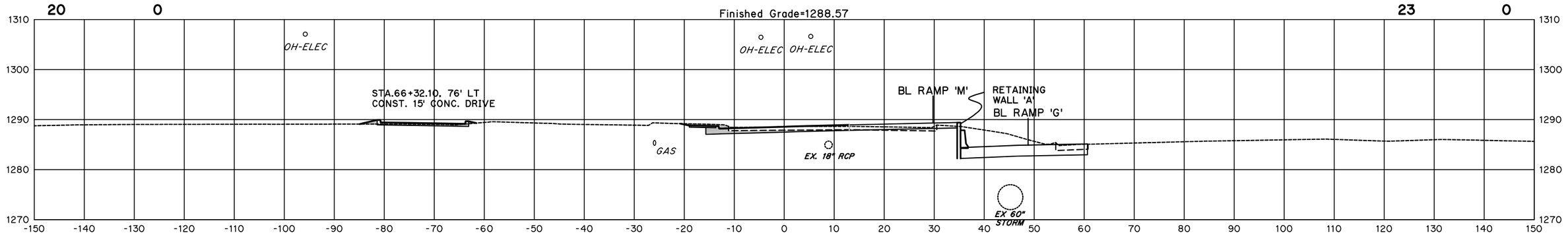

66+21.30

STA.66+03.17 S.W. SERV. RD.
S= -0.0200/+0.0200 ft./ft.
K= 0.0004462/0.0004462 ft./ft.

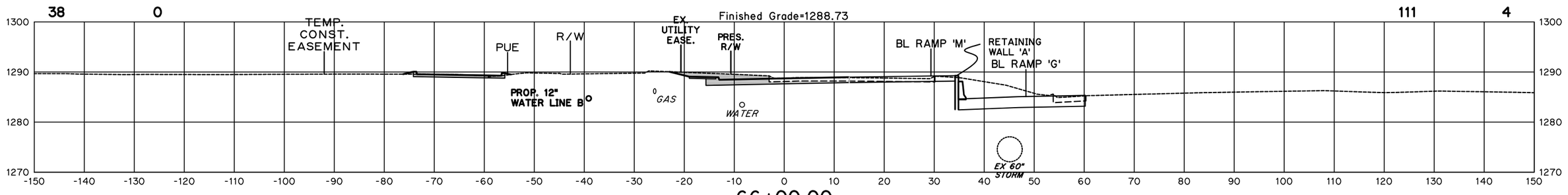

66+00.00

STA.65+89.00 76.7' LT.
END 2'-8" CURB & GUTTER

STR. SW10 ℄ S.W. SERV. RD. STA. 65+30.00 22.5' LT.
CONST. 4.0' DIA. MANHOLE W/ 18" X 126.4' LG. RCP
TO STR. SW7

STR. SW11 ℄ S.W. SERV. RD. STA. 65+30.00 30.77' RT.
CONST. ILB W/ 18" X 50.1' LG. RCP TO STR. SW10

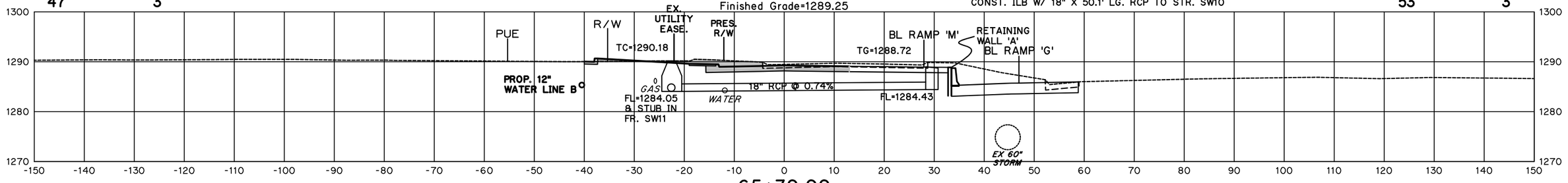

65+30.00

S.W. SERVICE RD.

S.W. SERVICE RD.

I-35/I-240 INTERCHANGE

STATE JOB NO. 09032(17)

OKLAHOMA COUNTY SHEET NO. X62

SEPT 13, 2016 - 14:35:60
H:\PROJECTS\2789_CrossRoads_InterX_New\PHASE IA\Roadway\Drawings\XSections\XSEC-CL-SWSERVRD-REV.DWG

Area
Cut Fill

(CAUTION) THE LOCATION OF ALL UTILITIES AS SHOWN ARE APPROXIMATE. DUE TO RELOCATION'S PLANNED OR PRESENTLY UNDER CONSTRUCTION THERE ARE SOME UTILITIES THAT WILL BE RELOCATED AND NOT SHOWN ON THESE PLANS. THE CONTRACTOR SHALL BE RESPONSIBLE FOR ANY DAMAGE TO ALL UTILITIES.

DEPTH & LOCATION OF EXISTING UTILITIES SHALL BE FIELD VERIFIED BY THE CONTRACTOR PRIOR TO CONSTRUCTION.

Volume
Cut Fill

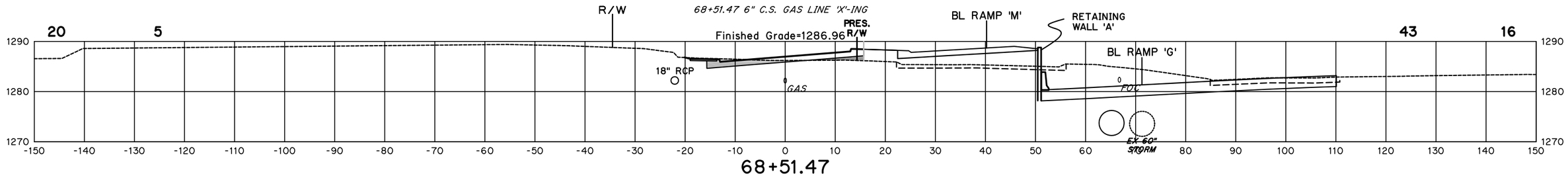

68+51.47

STR. SW12 ℄ S.W. SERV. RD. STA. 68+00.00 22' LT.
CONST. 4.0' DIA. MANHOLE W/ 19" X 91.6' LG. RCP
TO STR. SW14

STR. SW13 ℄ SW SERV. RD. STA. 68.00 13' LT.
CONST. CI DES. 2(B) W/ 18" X 6.5' LG. RCP
TO STR. SW12

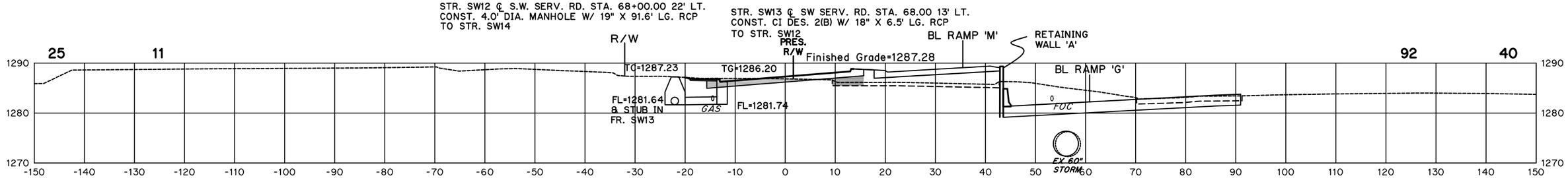

68+00.00

STA.67+60.00
END 2'-8" CURB & GUTTER

TEMP. CONST. EASEMENT

STA.67+37.65 S.W. SERV. RD.
S= -0.0800/+0.0800 ft./ft.
K= 0.0000000/0.0000000 ft./ft.

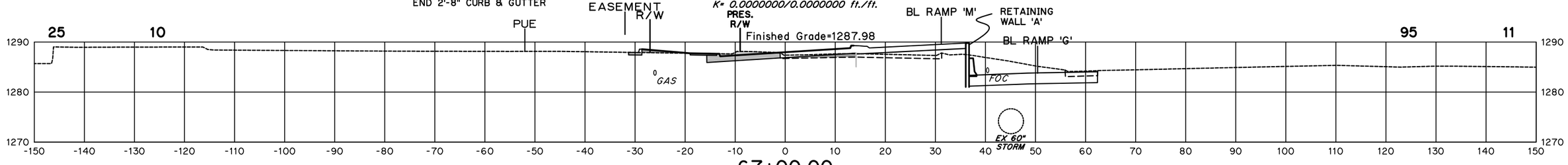

67+00.00

STA.66+87.00
BEGIN 2'-8" CURB & GUTTER

66+89.13 6" C.S. GAS LINE 'X'-ING

STA.63+43.58 LT.
CONST. 26' STREET RETURN

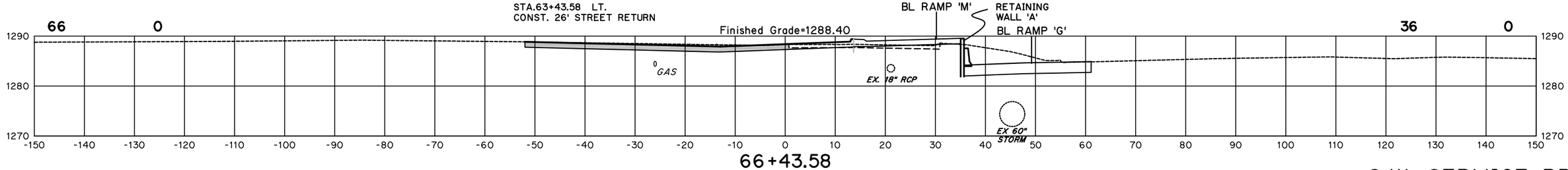

66+43.58
S.W. SERVICE RD.

S.W. SERVICE RD.

I-35/I-240 INTERCHANGE

STATE JOB NO. 09032(17)
OKLAHOMA COUNTY SHEET NO. X63

SEPT 13, 2016 - 14:35:60
H:\PROJECTS\2789_CrossRoads_InterX_New\PHASE IA\Roadway\Drawings\XSections\XSEC-CL-SWSERVRD-REV.DWG

(CAUTION) THE LOCATION OF ALL UTILITIES AS SHOWN ARE APPROXIMATE. DUE TO RELOCATION'S PLANNED OR PRESENTLY UNDER CONSTRUCTION THERE ARE SOME UTILITIES THAT WILL BE RELOCATED AND NOT SHOWN ON THESE PLANS. THE CONTRACTOR SHALL BE RESPONSIBLE FOR ANY DAMAGE TO ALL UTILITIES.

DEPTH & LOCATION OF EXISTING UTILITIES SHALL BE FIELD VERIFIED BY THE CONTRACTOR PRIOR TO CONSTRUCTION.

REVISIONS		
	DESCRIPTION	DATE
1	ADDED DRIVE	09/23/16

STA.71+13.61 S.W. SERV. RD.
S= -0.0200/0.0000 ft./ft.
K= 0.0000000/0.0004462 ft./ft.

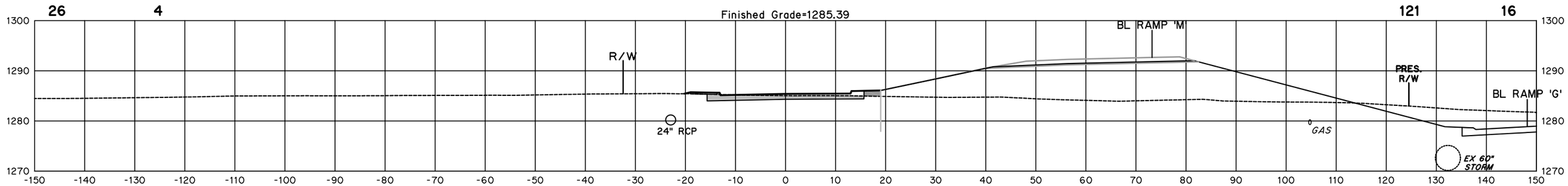

71+00.00

STA.70+68.78 S.W. SERV. RD.
S= -0.0200/+0.0200 ft./ft.
K= 0.0000000/0.0004462 ft./ft.

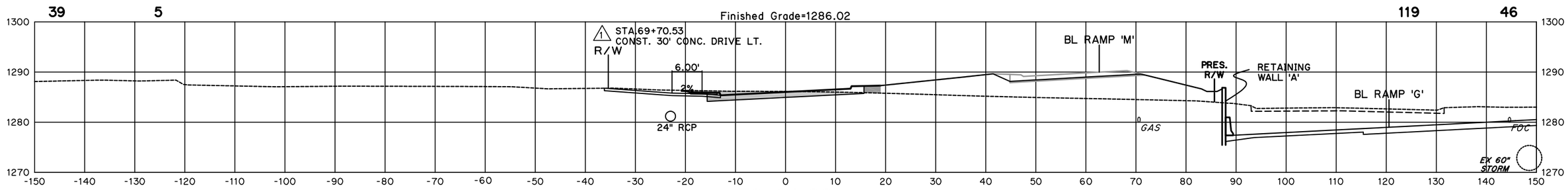

70+00.00

STA.69+34.30 S.W. SERV. RD.
S= -0.0800/+0.0800 ft./ft.
K= 0.0004462/0.0004462 ft./ft.

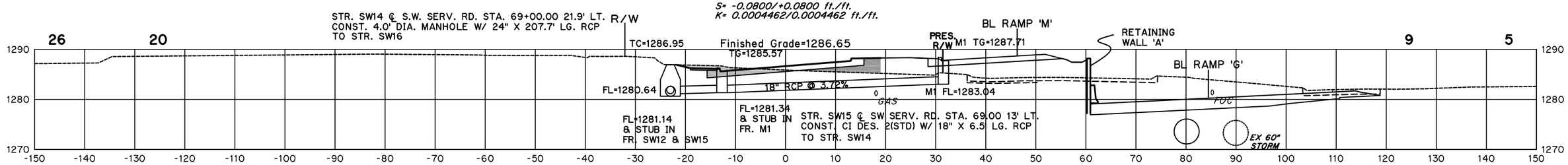

69+00.00

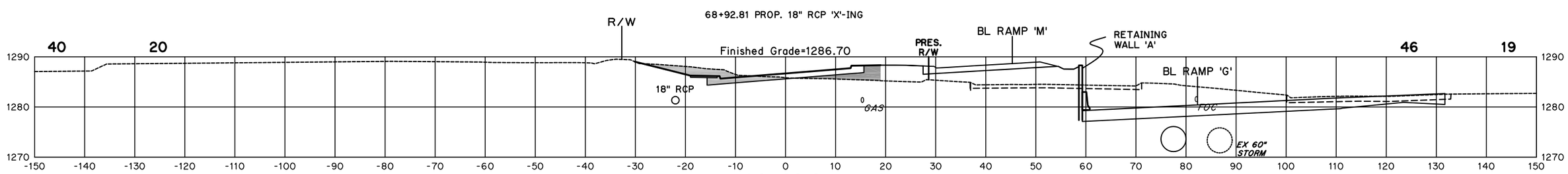

68+92.81
S.W. SERVICE RD.

S.W. SERVICE RD.

I-35/I-240 INTERCHANGE

STATE JOB NO. 09032(17)

OKLAHOMA COUNTY SHEET NO. X64

SEPT 23, 2016 - 13:47:18
H:\PROJECTS\2789_CrossRoads_InterX_New\PHASE IA\Roadway\Drawings\XSections\XSEC-CL-SWSERVRD-REV.DWG

Area	
Cut	Fill

(CAUTION) THE LOCATION OF ALL UTILITIES AS SHOWN ARE APPROXIMATE. DUE TO RELOCATION'S PLANNED OR PRESENTLY UNDER CONSTRUCTION THERE ARE SOME UTILITIES THAT WILL BE RELOCATED AND NOT SHOWN ON THESE PLANS. THE CONTRACTOR SHALL BE RESPONSIBLE FOR ANY DAMAGE TO ALL UTILITIES.

DEPTH & LOCATION OF EXISTING UTILITIES SHALL BE FIELD VERIFIED BY THE CONTRACTOR PRIOR TO CONSTRUCTION.

Volume	
Cut	Fill

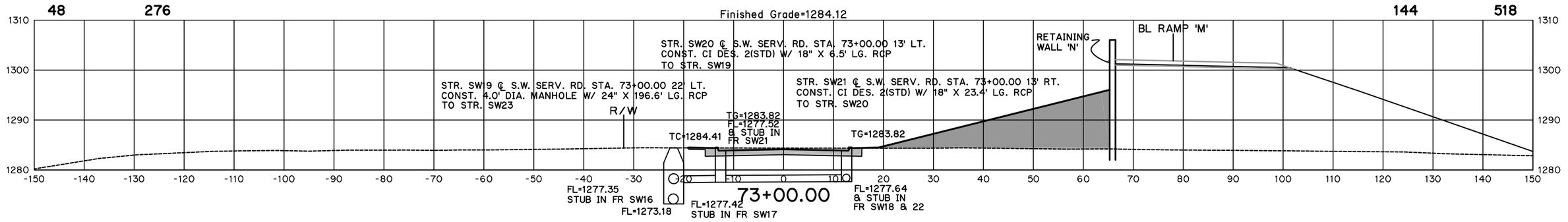

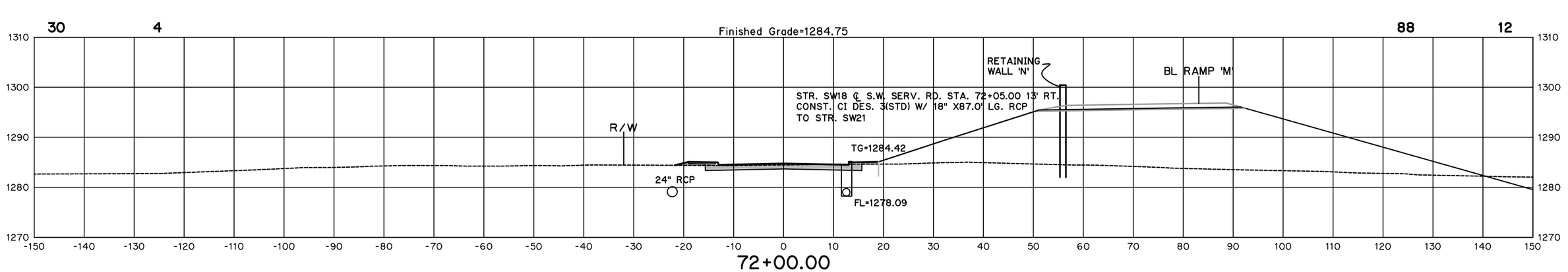

STA.71+58.44 S.W. SERV. RD.
S= -0.0200/-0.0200 ft./ft.
K= 0.0000000/0.0000000 ft./ft.

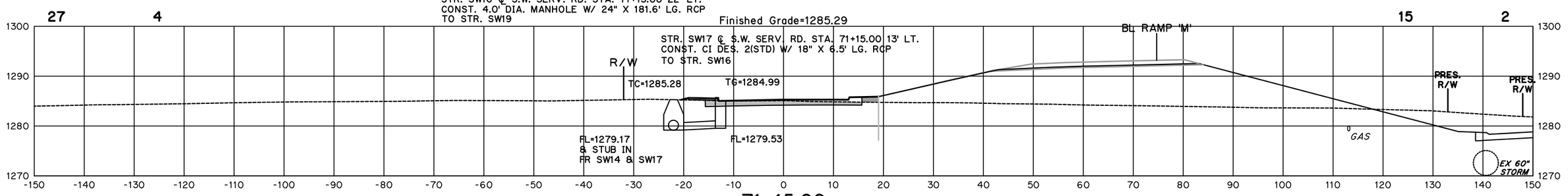

S.W. SERVICE RD.

I-35/I-240 INTERCHANGE

STATE JOB NO. 09032(17)

OKLAHOMA COUNTY SHEET NO. X65

SEPT 13, 2016 - 14:35:60
H:\PROJECTS\2789_CrossRoads_InterX_New\PHASE IA\Roadway\Drawings\XSections\XSEC-CL-SWSERVRD-REV.DWG

(CAUTION) THE LOCATION OF ALL UTILITIES AS SHOWN ARE APPROXIMATE. DUE TO RELOCATION'S PLANNED OR PRESENTLY UNDER CONSTRUCTION THERE ARE SOME UTILITIES THAT WILL BE RELOCATED AND NOT SHOWN ON THESE PLANS. THE CONTRACTOR SHALL BE RESPONSIBLE FOR ANY DAMAGE TO ALL UTILITIES.

DEPTH & LOCATION OF EXISTING UTILITIES SHALL BE FIELD VERIFIED BY THE CONTRACTOR PRIOR TO CONSTRUCTION.

Area		Volume	
Cut	Fill	Cut	Fill

STA.74+52.26 S.W. SERV. RD.
S= -0.0200/-0.0200 ft./ft.
K= 0.0000000/0.0004462 ft./ft.

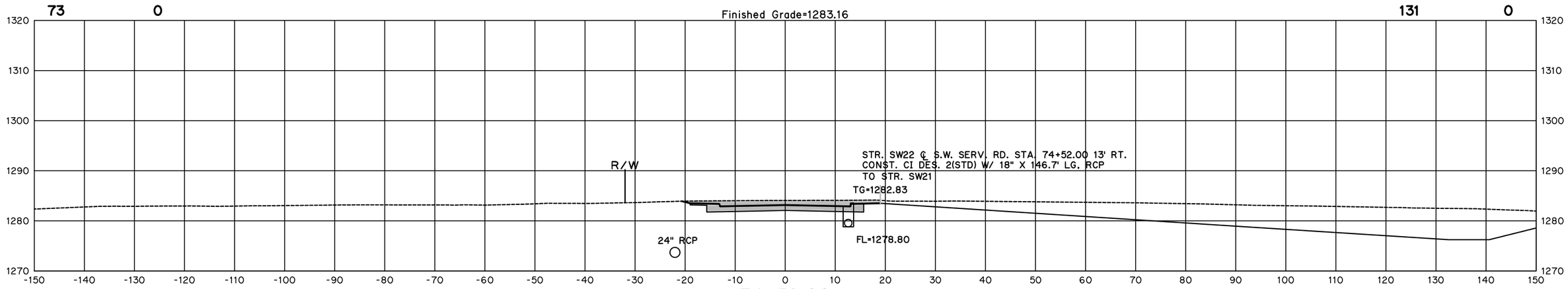

74+52.00

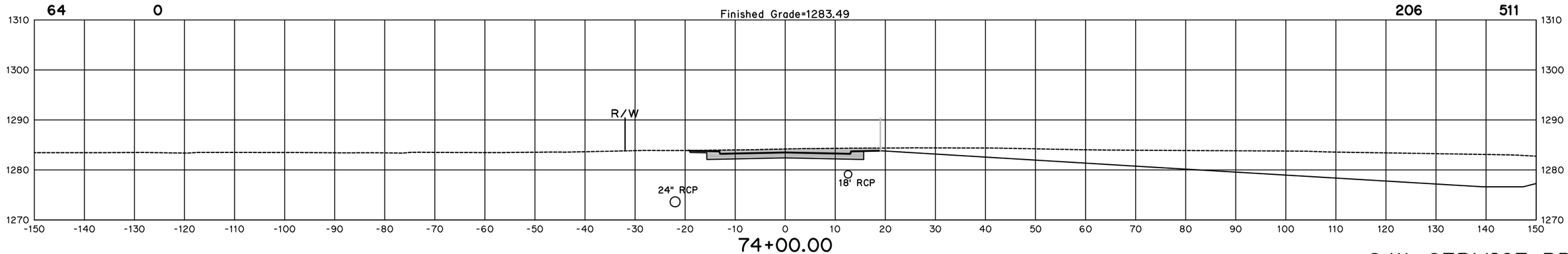

74+00.00
S.W. SERVICE RD.

S.W. SERVICE RD.

I-35/I-240 INTERCHANGE

STATE JOB NO. 09032(17)

OKLAHOMA COUNTY SHEET NO. X66

SEPT 13, 2016 - 14:35:60
H:\PROJECTS\2789_CrossRoads_InterX_New\PHASE IA\Roadway\Drawings\XSections\XSEC-CL-SWSERVRD-REV.DWG

Area	
Cut	Fill

(CAUTION) THE LOCATION OF ALL UTILITIES AS SHOWN ARE APPROXIMATE. DUE TO RELOCATION'S PLANNED OR PRESENTLY UNDER CONSTRUCTION THERE ARE SOME UTILITIES THAT WILL BE RELOCATED AND NOT SHOWN ON THESE PLANS. THE CONTRACTOR SHALL BE RESPONSIBLE FOR ANY DAMAGE TO ALL UTILITIES.

DEPTH & LOCATION OF EXISTING UTILITIES SHALL BE FIELD VERIFIED BY THE CONTRACTOR PRIOR TO CONSTRUCTION.

Volume	
Cut	Fill

STA.75+41.92 S.W. SERV. RD.
S= -0.0200/+0.0200 ft./ft.
K= 0.0004462/0.0004462 ft./ft.

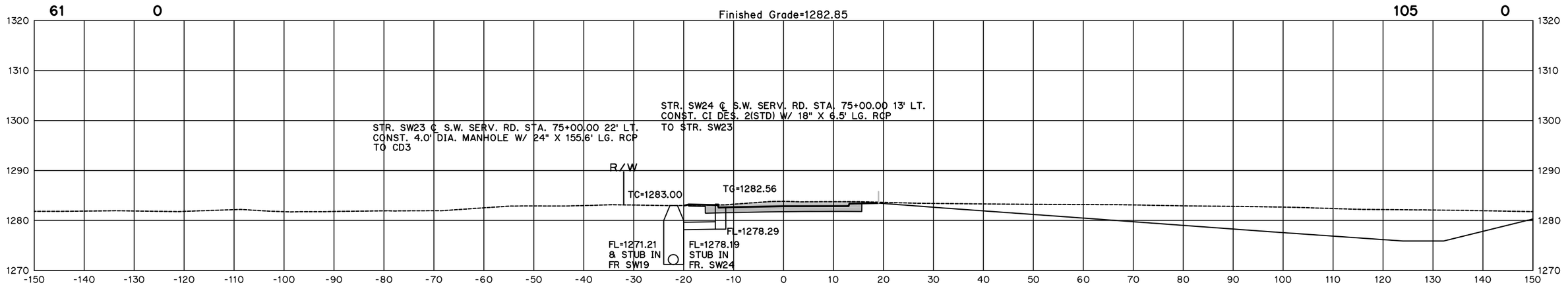

75+00.00

STA.74+97.09 S.W. SERV. RD.
S= -0.0200/0.0000 ft./ft.
K= 0.0000000/0.0004462 ft./ft.

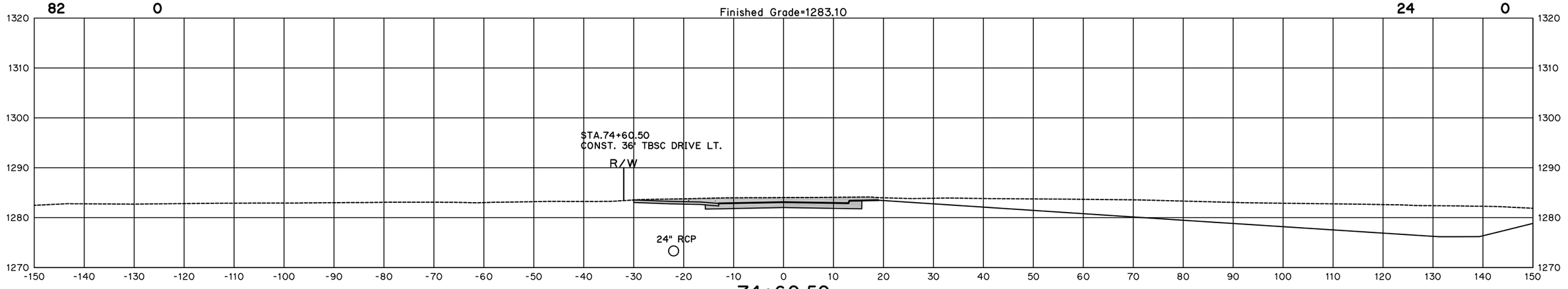

74+60.50

S.W. SERVICE RD.

S.W. SERVICE RD.

I-35/I-240 INTERCHANGE

STATE JOB NO. 09032(17)

OKLAHOMA COUNTY SHEET NO. X67

SEPT 13, 2016 - 14:35:60
H:\PROJECTS\2789_CrossRoads_InterX_New\PHASE IA\Roadway\Drawings\XSections\XSEC-CL-SWSERVRD-REV.DWG

Area	
Cut	Fill

(CAUTION) THE LOCATION OF ALL UTILITIES AS SHOWN ARE APPROXIMATE. DUE TO RELOCATION'S PLANNED OR PRESENTLY UNDER CONSTRUCTION THERE ARE SOME UTILITIES THAT WILL BE RELOCATED AND NOT SHOWN ON THESE PLANS. THE CONTRACTOR SHALL BE RESPONSIBLE FOR ANY DAMAGE TO ALL UTILITIES.

DEPTH & LOCATION OF EXISTING UTILITIES SHALL BE FIELD VERIFIED BY THE CONTRACTOR PRIOR TO CONSTRUCTION.

Volume	
Cut	Fill

476 31

Finished Grade=1281.85

521 49

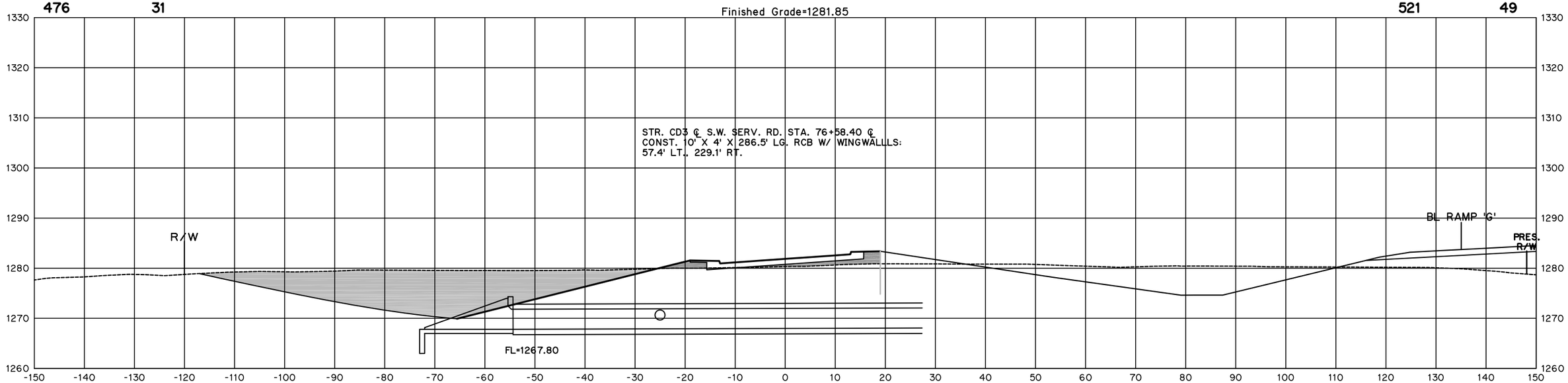

76+58.86

24" RCP FROM SW23 STUB INTO CD3
FL=1269.65

STA.76+53.99 S.W. SERV. RD.
S= -0.0700/+0.0700 ft./ft.
K= 0.0000000/0.0000000 ft./ft.

2 14

Finished Grade=1282.22

117 27

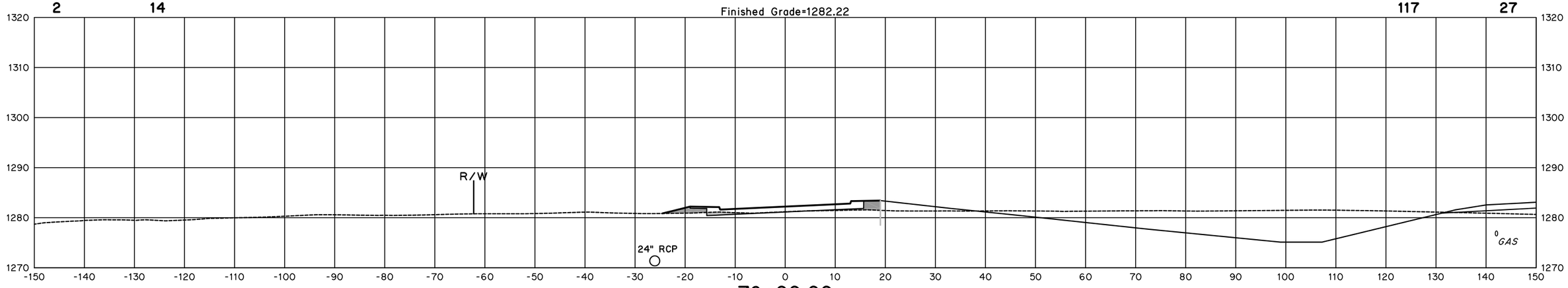

76+00.00

S.W. SERVICE RD.

S.W. SERVICE RD.

STATE JOB NO. 09032(17)

I-35/I-240 INTERCHANGE OKLAHOMA COUNTY SHEET NO. X68

SEPT 13, 2016 - 14:35:60
H:\PROJECTS\2789_CrossRoads_InterX_New\PHASE IA\Roadway\Drawings\XSections\XSEC-CL-SWSERVRD-REV.DWG

(CAUTION) THE LOCATION OF ALL UTILITIES AS SHOWN ARE APPROXIMATE. DUE TO RELOCATION'S PLANNED OR PRESENTLY UNDER CONSTRUCTION THERE ARE SOME UTILITIES THAT WILL BE RELOCATED AND NOT SHOWN ON THESE PLANS. THE CONTRACTOR SHALL BE RESPONSIBLE FOR ANY DAMAGE TO ALL UTILITIES.

DEPTH & LOCATION OF EXISTING UTILITIES SHALL BE FIELD VERIFIED BY THE CONTRACTOR PRIOR TO CONSTRUCTION.

STR. CD2 ℄ I-240 STA. 419+64.43 5.32' RT.
INLET END 10' X 5' X 225.0' LG. RCB W/ WINGWALLS
FL=1266.37

STR. SW26 ℄ S.W. SERV. RD. STA. 79+00.00 13' LT.
CONST. CI DES. 2(STD) W/ 18" X 6.5' LG. RCP TO STR. SW23

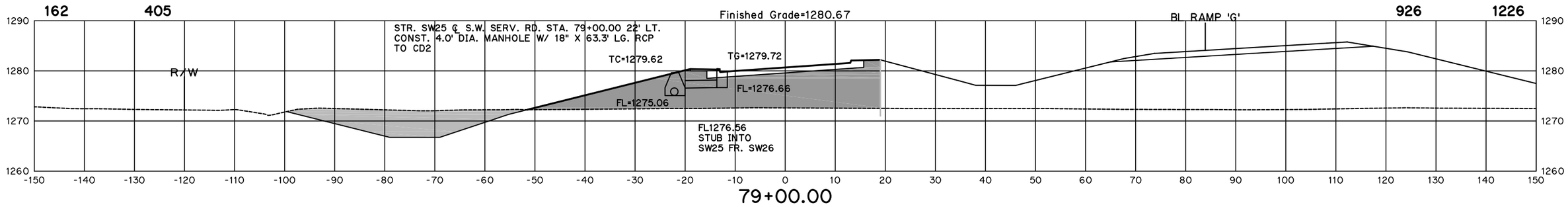

79+00.00

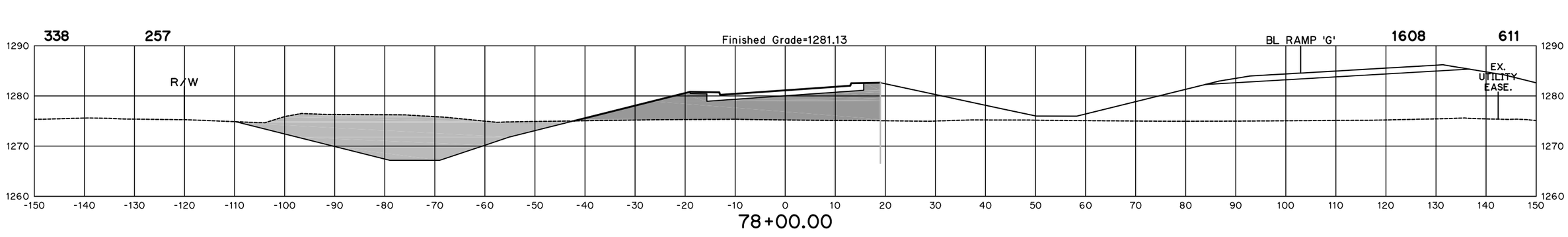

78+00.00

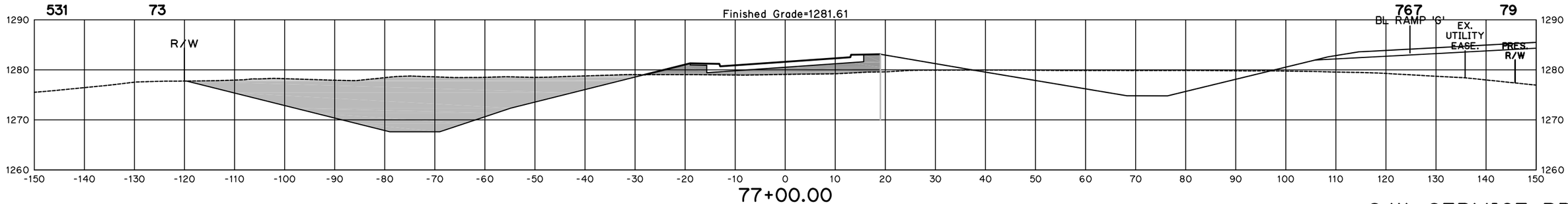

77+00.00

S.W. SERVICE RD.

S.W. SERVICE RD.

I-35/I-240 INTERCHANGE

STATE JOB NO. 09032(17)

OKLAHOMA COUNTY SHEET NO. X69

SEPT 13, 2016 - 14:35:60
H:\PROJECTS\2789_CrossRoads_InterX_New\PHASE IA\Roadway\Drawings\XSections\XSEC-CL-SWSERVRD-REV.DWG

(CAUTION) THE LOCATION OF ALL UTILITIES AS SHOWN ARE APPROXIMATE. DUE TO RELOCATION'S PLANNED OR PRESENTLY UNDER CONSTRUCTION THERE ARE SOME UTILITIES THAT WILL BE RELOCATED AND NOT SHOWN ON THESE PLANS. THE CONTRACTOR SHALL BE RESPONSIBLE FOR ANY DAMAGE TO ALL UTILITIES.

DEPTH & LOCATION OF EXISTING UTILITIES SHALL BE FIELD VERIFIED BY THE CONTRACTOR PRIOR TO CONSTRUCTION.

STR. SW28 ℄ S.W. SERV. RD. STA. 81+46.00 13' LT.
CONST. DES. 2(STD) W/ 18" X 8.5' LG. RCP TO STR. SW27

STR. SW27 ℄ S.W. SERV. RD. STA. 81+46.00 24' LT.
CONST. 4.0' DIA. MANHOLE W/ 24" X 162.1' LG. RCP TO CD2

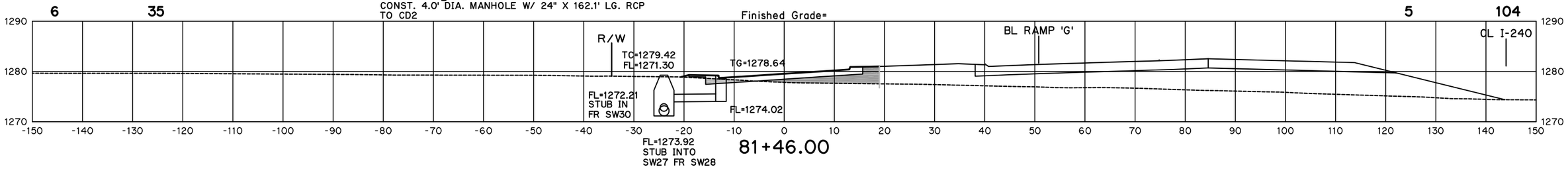

STA.81+36.25 S.W. SERV. RD.
S= -0.0700/+0.0700 ft./ft.
K= 0.0004462/0.0004462 ft./ft.

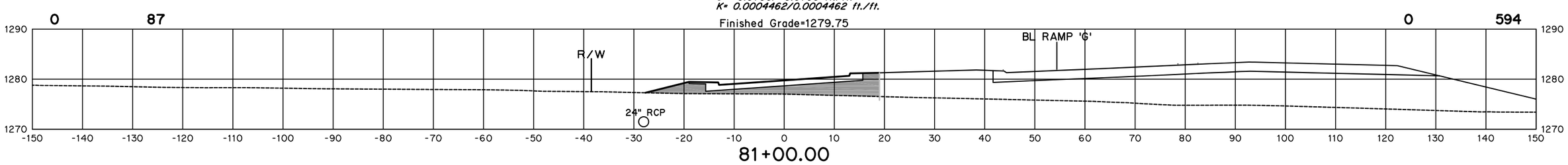

80+25.27 10" SAN. SEWER LINE 'X'-ING

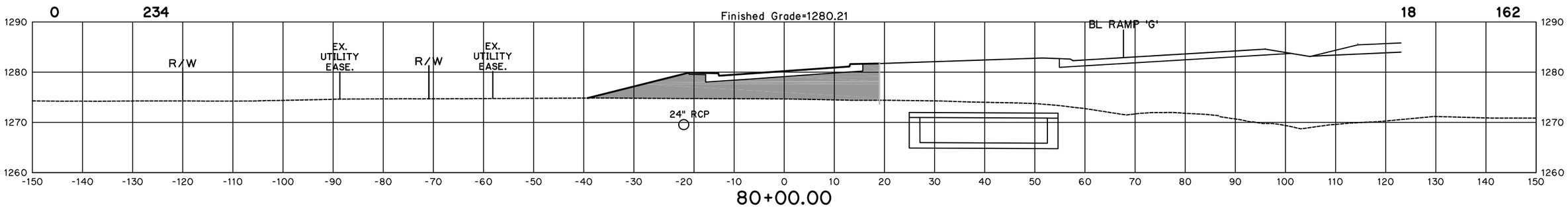

24" RCP FROM SW27 STUB INTO CD2
FL=1268.06

79+83.22 STR. CD2 'X'-ING

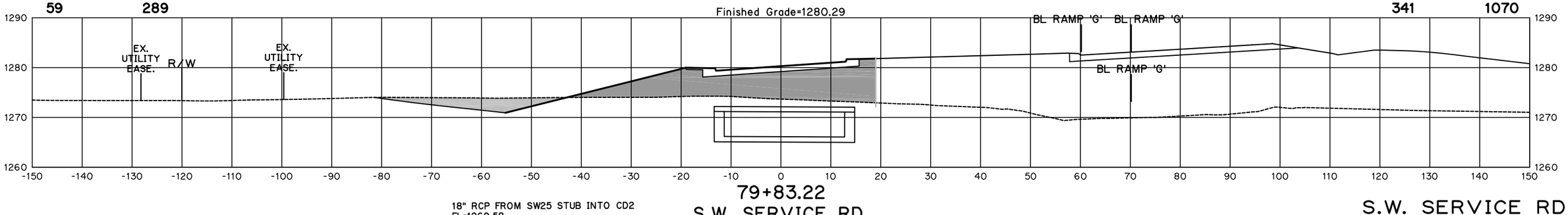

18" RCP FROM SW25 STUB INTO CD2
FL=1269.58

S.W. SERVICE RD.

STATE JOB NO. 09032(17)

I-35/I-240 INTERCHANGE OKLAHOMA COUNTY SHEET NO. X70

SEPT 13, 2016 - 14:35:60
H:\PROJECTS\2789_CrossRoads_InterX_New\PHASE IA\Roadway\Drawings\XSections\XSEC-CL-SWSERVRD-REV.DWG

Area	
Cut	Fill

(CAUTION) THE LOCATION OF ALL UTILITIES AS SHOWN ARE APPROXIMATE. DUE TO RELOCATION'S PLANNED OR PRESENTLY UNDER CONSTRUCTION THERE ARE SOME UTILITIES THAT WILL BE RELOCATED AND NOT SHOWN ON THESE PLANS. THE CONTRACTOR SHALL BE RESPONSIBLE FOR ANY DAMAGE TO ALL UTILITIES.

DEPTH & LOCATION OF EXISTING UTILITIES SHALL BE FIELD VERIFIED BY THE CONTRACTOR PRIOR TO CONSTRUCTION.

Volume	
Cut	Fill

STA.83+81.29 S.W. SERV. RD.
S= -0.0200/0.0000 ft./ft.
K= 0.0000000/0.0004462 ft./ft.

STA.83+37.22 S.W. SERV. RD.
S= -0.0200/-0.0200 ft./ft.
K= 0.0000000/0.0004462 ft./ft.

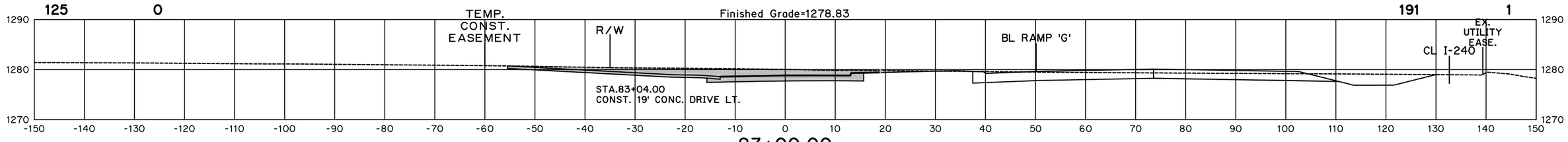

83+00.00

STA.82+69.50
CONST. 19' CONC. DRIVE LT.

STA.82+93.15 S.W. SERV. RD.
S= -0.0200/0.0000 ft./ft.
K= 0.0000000/0.0004462 ft./ft.

STA.82+48.32 S.W. SERV. RD.
S= -0.0200/+0.0200 ft./ft.
K= 0.0000000/0.0004462 ft./ft.

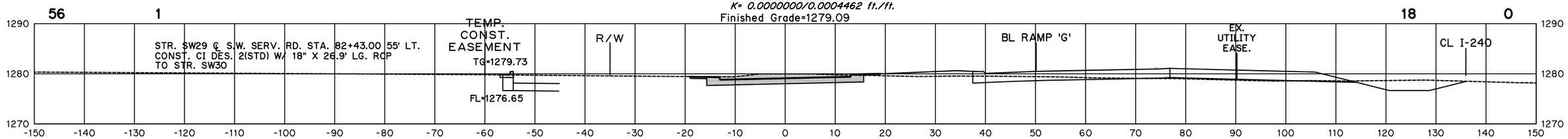

82+43.00

STR. SW30 ℄ S.W. SERV. RD. STA. 82+35.00 27' LT.
CONST. 4.0' DIA. MANHOLE W/ 18" X 84.5' LG. RCP
TO STR. SW27



82+35.00

STA.82+32.42
BEGIN 2'-8" CURB & GUTTER

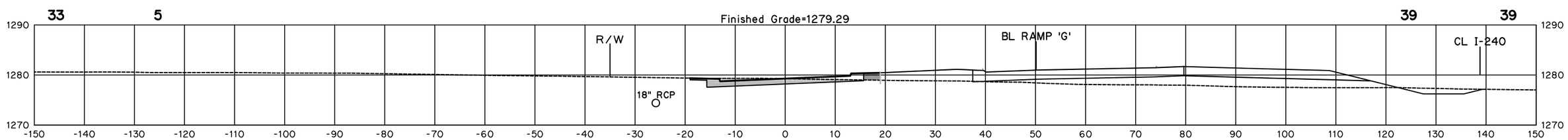

82+00.00

S.W. SERVICE RD.

S.W. SERVICE RD.

I-35/I-240 INTERCHANGE

STATE JOB NO. 09032(17)

OKLAHOMA COUNTY SHEET NO. X71

SEPT 13, 2016 - 14:35:60
H:\PROJECTS\2789_CrossRoads_InterX_New\PHASE IA\Roadway\Drawings\XSections\XSEC-CL-SWSERVRD-REV.DWG

Area	
Cut	Fill

(CAUTION) THE LOCATION OF ALL UTILITIES AS SHOWN ARE APPROXIMATE. DUE TO RELOCATION'S PLANNED OR PRESENTLY UNDER CONSTRUCTION THERE ARE SOME UTILITIES THAT WILL BE RELOCATED AND NOT SHOWN ON THESE PLANS. THE CONTRACTOR SHALL BE RESPONSIBLE FOR ANY DAMAGE TO ALL UTILITIES.

DEPTH & LOCATION OF EXISTING UTILITIES SHALL BE FIELD VERIFIED BY THE CONTRACTOR PRIOR TO CONSTRUCTION.

Volume	
Cut	Fill

STA.85+86.44 S.W. SERV. RD.
S= -0.0200/+0.0200 ft./ft.
K= 0.0000000/0.0004462 ft./ft.

STA.85+70.75 S.W. SERV. RD.
S= -0.0270/+0.0270 ft./ft.
K= 0.0004462/0.0004462 ft./ft.

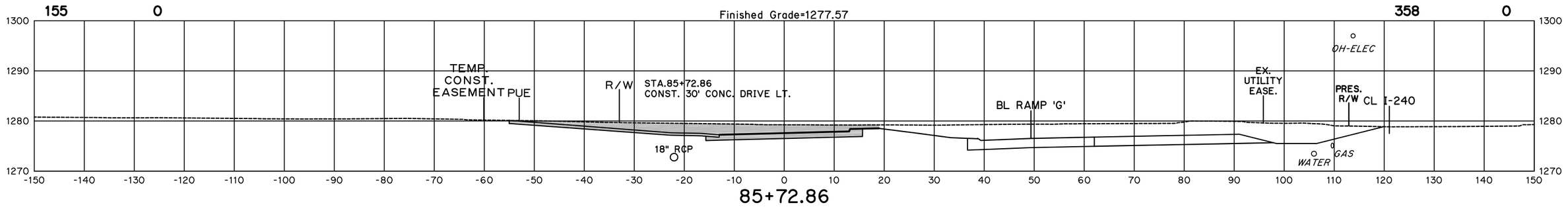

85+72.86

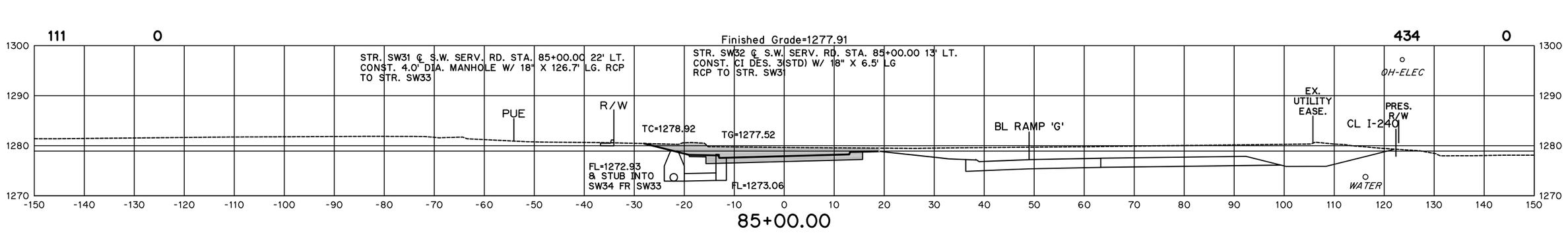

85+00.00

STA.84+26.12 S.W. SERV. RD.
S= -0.0200/+0.0200 ft./ft.
K= 0.0004462/0.0004462 ft./ft.

STA.84+41.81 S.W. SERV. RD.
S= -0.0270/+0.0270 ft./ft.
K= 0.0000000/0.0000000 ft./ft.

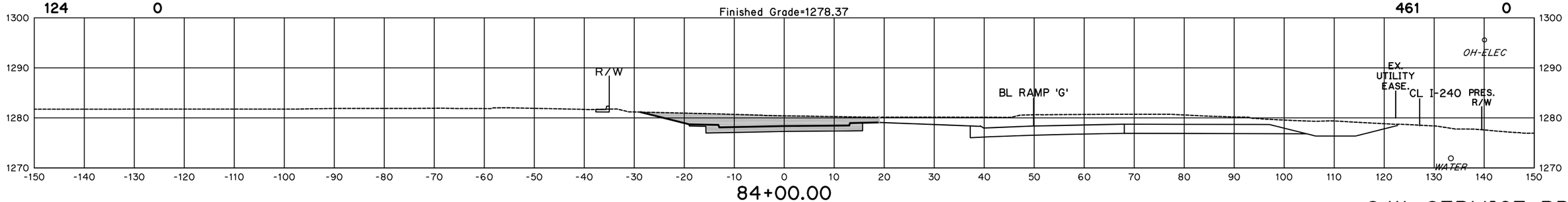

84+00.00

S.W. SERVICE RD.

S.W. SERVICE RD.

I-35/I-240 INTERCHANGE

STATE JOB NO. 09032(17)

OKLAHOMA COUNTY SHEET NO. X72

SEPT 13, 2016 - 14:35:60
H:\PROJECTS\2789_CrossRoads_InterX_New\PHASE IA\Roadway\Drawings\XSections\XSEC-CL-SWSERVRD-REV.DWG

Area	
Cut	Fill

(CAUTION) THE LOCATION OF ALL UTILITIES AS SHOWN ARE APPROXIMATE. DUE TO RELOCATION'S PLANNED OR PRESENTLY UNDER CONSTRUCTION THERE ARE SOME UTILITIES THAT WILL BE RELOCATED AND NOT SHOWN ON THESE PLANS. THE CONTRACTOR SHALL BE RESPONSIBLE FOR ANY DAMAGE TO ALL UTILITIES.

DEPTH & LOCATION OF EXISTING UTILITIES SHALL BE FIELD VERIFIED BY THE CONTRACTOR PRIOR TO CONSTRUCTION.

Volume	
Cut	Fill

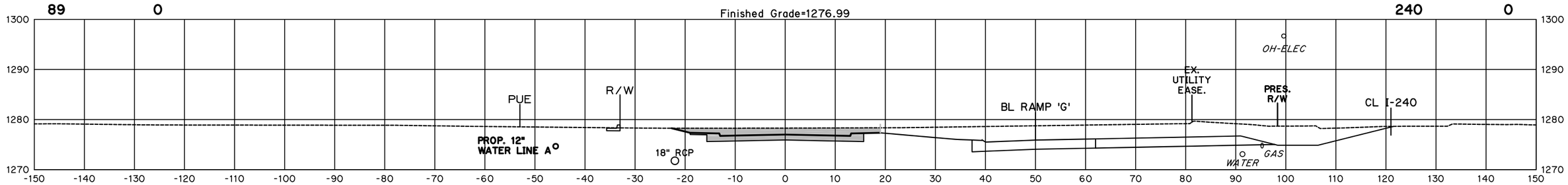

87+00.00

STA.86+31.27 S.W. SERV. RD.
S= -0.0200/0.0000 ft./ft.
K= 0.0000000/0.0004462 ft./ft.

STA.86+76.10 S.W. SERV. RD.
S= -0.0200/-0.0200 ft./ft.
K= 0.0000000/0.0000000 ft./ft.

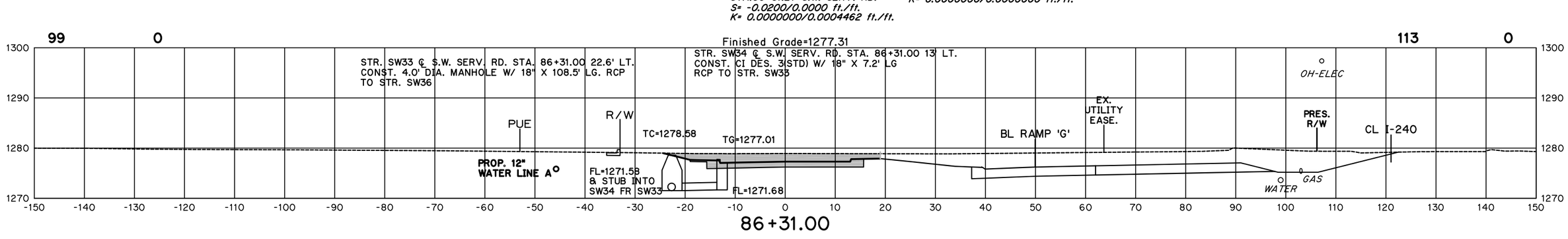

86+31.00

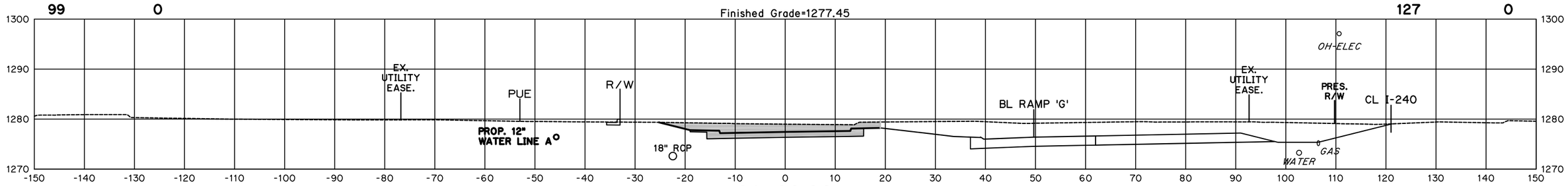

86+00.00

S.W. SERVICE RD.

S.W. SERVICE RD.

I-35/I-240 INTERCHANGE

STATE JOB NO. 09032(17)

OKLAHOMA COUNTY SHEET NO. X73

SEPT 13, 2016 - 14:35:60
H:\PROJECTS\2789_CrossRoads_InterX_New\PHASE IA\Roadway\Drawings\XSections\XSEC-CL-SWSERVRD-REV.DWG

(CAUTION) THE LOCATION OF ALL UTILITIES AS SHOWN ARE APPROXIMATE. DUE TO RELOCATION'S PLANNED OR PRESENTLY UNDER CONSTRUCTION THERE ARE SOME UTILITIES THAT WILL BE RELOCATED AND NOT SHOWN ON THESE PLANS. THE CONTRACTOR SHALL BE RESPONSIBLE FOR ANY DAMAGE TO ALL UTILITIES.

DEPTH & LOCATION OF EXISTING UTILITIES SHALL BE FIELD VERIFIED BY THE CONTRACTOR PRIOR TO CONSTRUCTION.

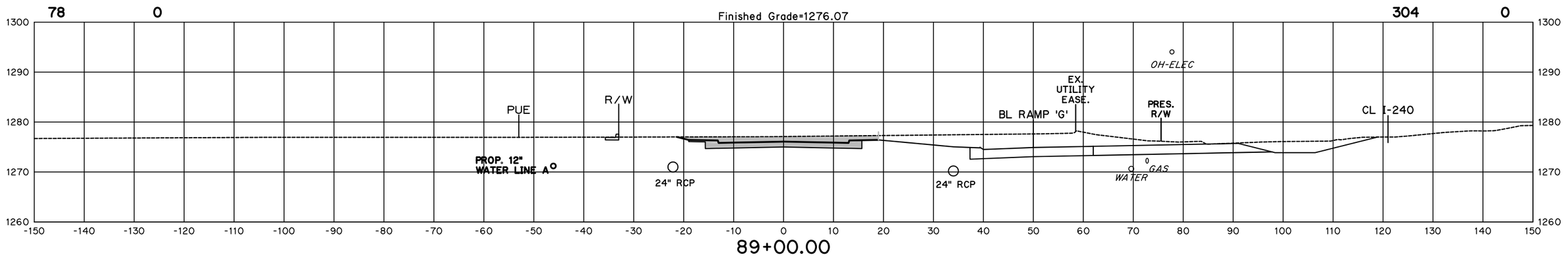

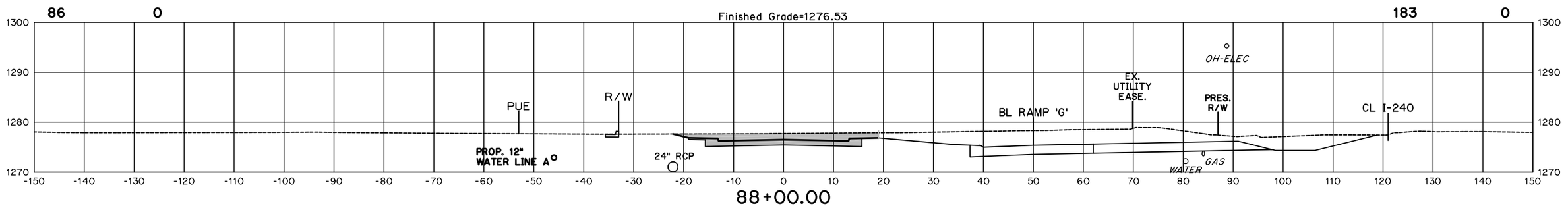

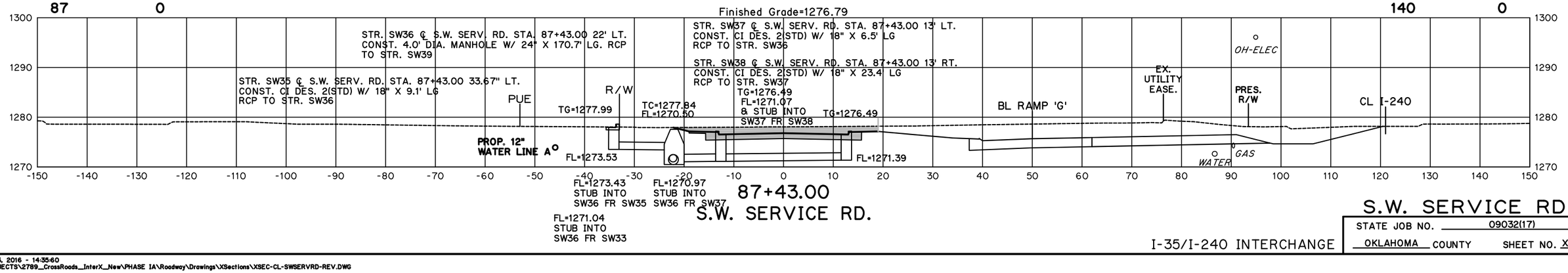

S.W. SERVICE RD.

I-35/I-240 INTERCHANGE

STATE JOB NO. 09032(17)

OKLAHOMA COUNTY SHEET NO. X74

SEPT 13, 2016 - 14:35:60
H:\PROJECTS\2789_CrossRoads_InterX_New\PHASE IA\Roadway\Drawings\XSections\XSEC-CL-SWSERVRD-REV.DWG

Area

Cut Fill

(CAUTION) THE LOCATION OF ALL UTILITIES AS SHOWN ARE APPROXIMATE. DUE TO RELOCATION'S PLANNED OR PRESENTLY UNDER CONSTRUCTION THERE ARE SOME UTILITIES THAT WILL BE RELOCATED AND NOT SHOWN ON THESE PLANS. THE CONTRACTOR SHALL BE RESPONSIBLE FOR ANY DAMAGE TO ALL UTILITIES.

DEPTH & LOCATION OF EXISTING UTILITIES SHALL BE FIELD VERIFIED BY THE CONTRACTOR PRIOR TO CONSTRUCTION.

Volume

Cut Fill

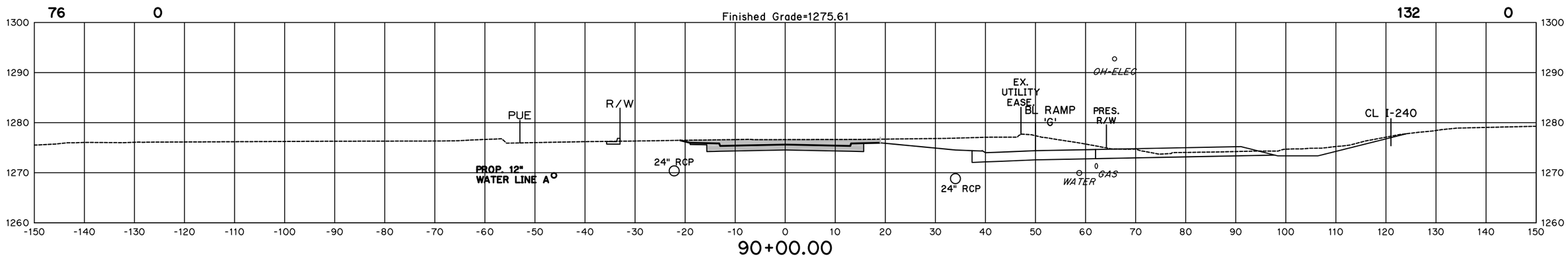

90+00.00

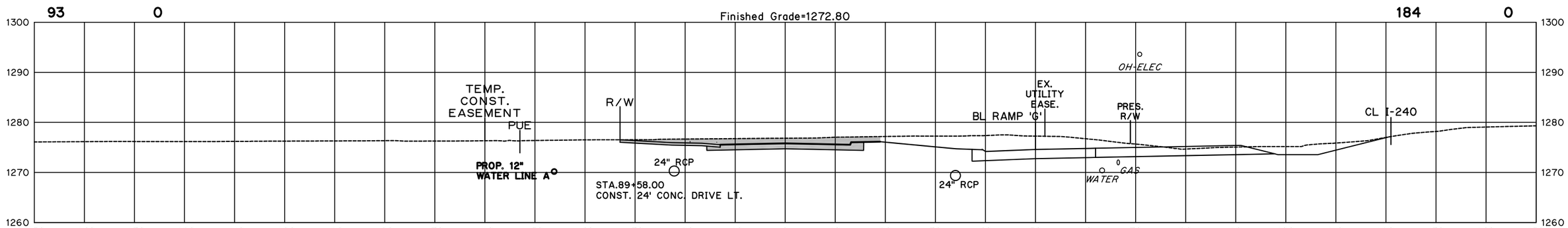

89+58.00

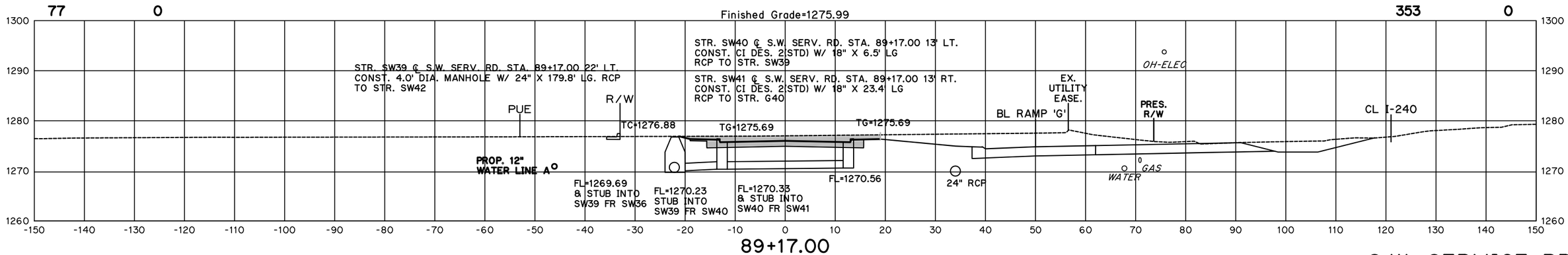

89+17.00

S.W. SERVICE RD.

S.W. SERVICE RD.

I-35/I-240 INTERCHANGE

STATE JOB NO. 09032(17)

OKLAHOMA COUNTY SHEET NO. X75

SEPT 13, 2016 - 14:35:60
H:\PROJECTS\2789_CrossRoads_InterX_New\PHASE IA\Roadway\Drawings\XSections\XSEC-CL-SWSERVRD-REV.DWG

Area Cut Fill

(CAUTION) THE LOCATION OF ALL UTILITIES AS SHOWN ARE APPROXIMATE. DUE TO RELOCATION'S PLANNED OR PRESENTLY UNDER CONSTRUCTION THERE ARE SOME UTILITIES THAT WILL BE RELOCATED AND NOT SHOWN ON THESE PLANS. THE CONTRACTOR SHALL BE RESPONSIBLE FOR ANY DAMAGE TO ALL UTILITIES.

DEPTH & LOCATION OF EXISTING UTILITIES SHALL BE FIELD VERIFIED BY THE CONTRACTOR PRIOR TO CONSTRUCTION.

Volume Cut Fill

91+24.74 PROP. S.S LINE 'X'-ING

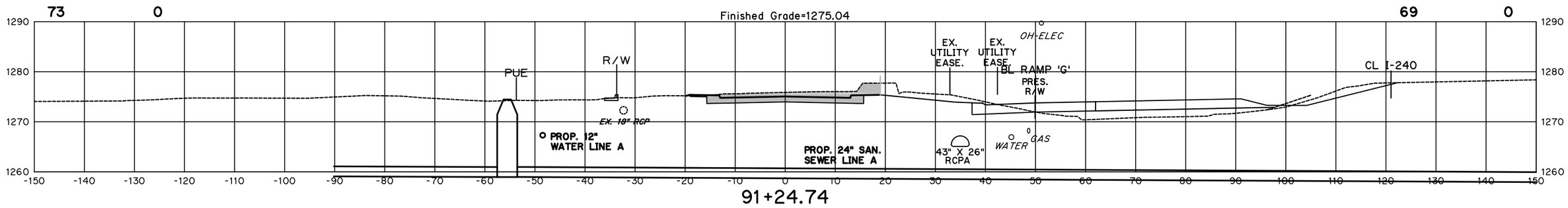

91+24.74

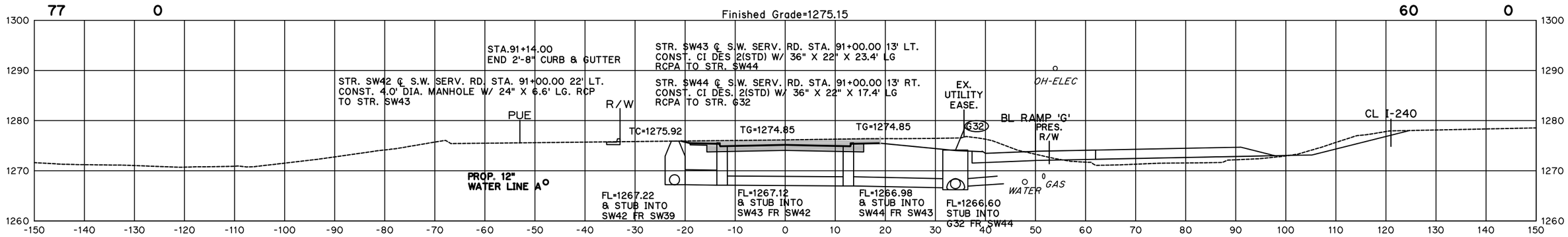

91+00.00

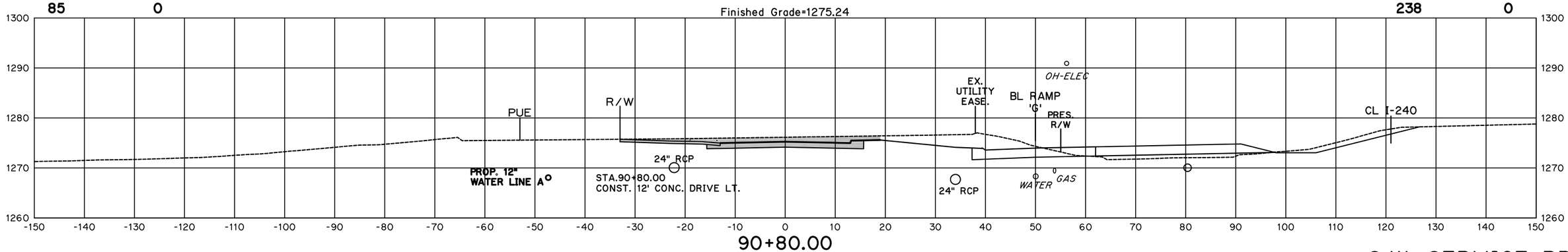

90+80.00

S.W. SERVICE RD.

S.W. SERVICE RD.

I-35/I-240 INTERCHANGE

STATE JOB NO. 09032(17)

OKLAHOMA COUNTY SHEET NO. X76

SEPT 13, 2016 - 14:35:60
H:\PROJECTS\2789_CrossRoads_InterX_New\PHASE IA\Roadway\Drawings\XSections\XSEC-CL-SWSERVRD-REV.DWG

(CAUTION) THE LOCATION OF ALL UTILITIES AS SHOWN ARE APPROXIMATE. DUE TO RELOCATION'S PLANNED OR PRESENTLY UNDER CONSTRUCTION THERE ARE SOME UTILITIES THAT WILL BE RELOCATED AND NOT SHOWN ON THESE PLANS. THE CONTRACTOR SHALL BE RESPONSIBLE FOR ANY DAMAGE TO ALL UTILITIES.

DEPTH & LOCATION OF EXISTING UTILITIES SHALL BE FIELD VERIFIED BY THE CONTRACTOR PRIOR TO CONSTRUCTION.

Area Cut 0 Fill 321

Volume Cut 0 Fill 839

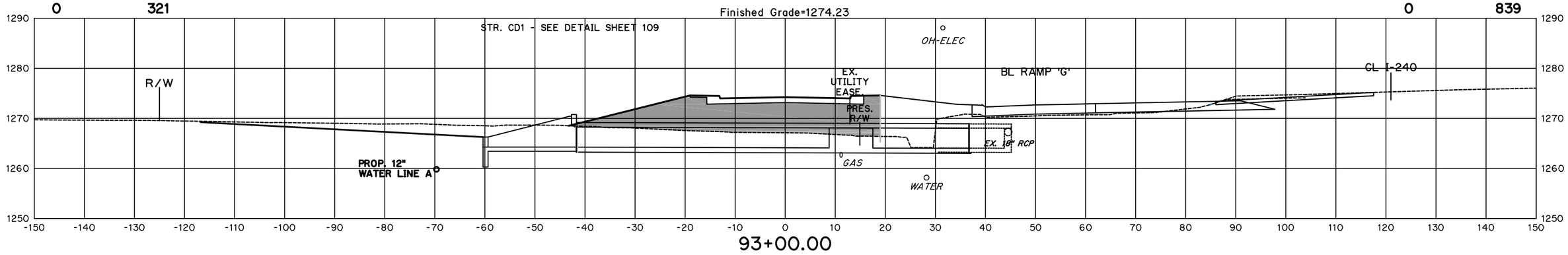

93+00.00

Area Cut 0 Fill 132

Volume Cut 25 Fill 176

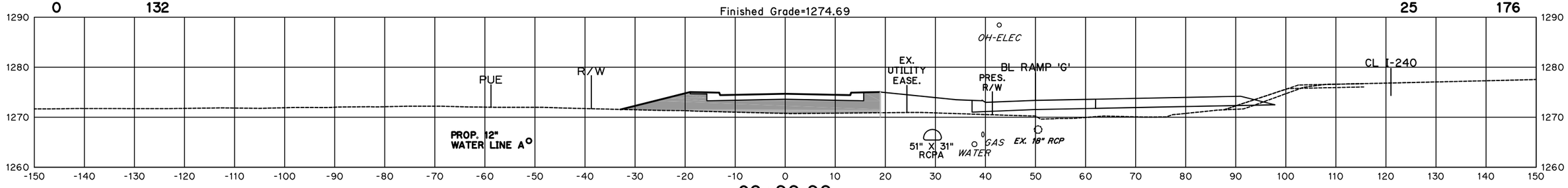

92+00.00

91+32.21 EX. 18" RCP 'X'-ING

Area Cut 20 Fill 9

Volume Cut 13 Fill 1

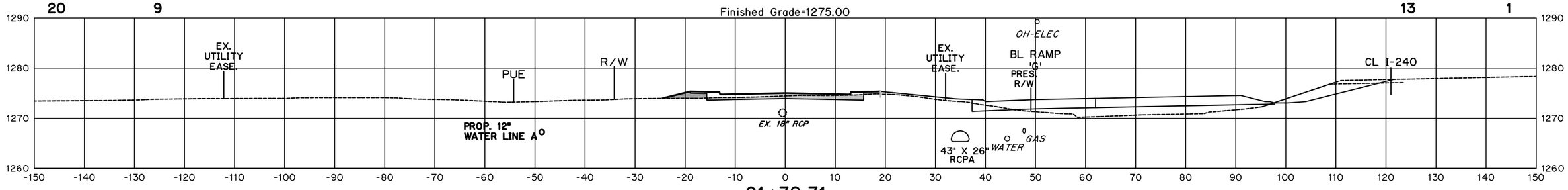

91+32.31

S.W. SERVICE RD.

S.W. SERVICE RD.

I-35/I-240 INTERCHANGE

STATE JOB NO. 09032(17)

OKLAHOMA COUNTY SHEET NO. X77

SEPT 13, 2016 - 14:35:60
H:\PROJECTS\2789_CrossRoads_InterX_New\PHASE IA\Roadway\Drawings\XSections\XSEC-CL-SWSERVRD-REV.DWG

Area	
Cut	Fill

(CAUTION) THE LOCATION OF ALL UTILITIES AS SHOWN ARE APPROXIMATE. DUE TO RELOCATION'S PLANNED OR PRESENTLY UNDER CONSTRUCTION THERE ARE SOME UTILITIES THAT WILL BE RELOCATED AND NOT SHOWN ON THESE PLANS. THE CONTRACTOR SHALL BE RESPONSIBLE FOR ANY DAMAGE TO ALL UTILITIES.

DEPTH & LOCATION OF EXISTING UTILITIES SHALL BE FIELD VERIFIED BY THE CONTRACTOR PRIOR TO CONSTRUCTION.

Volume	
Cut	Fill

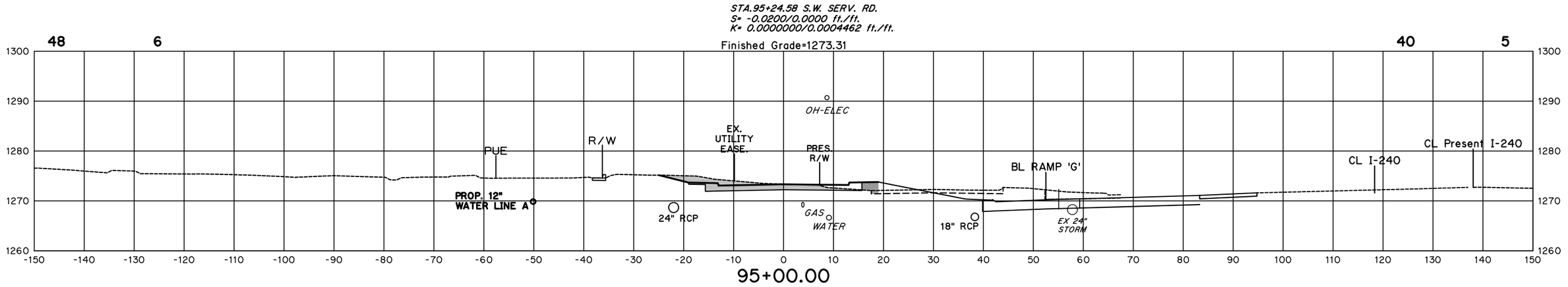

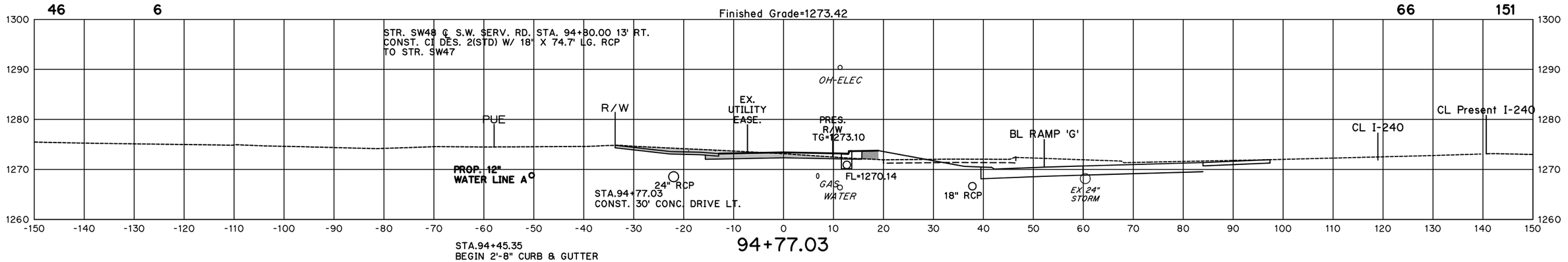

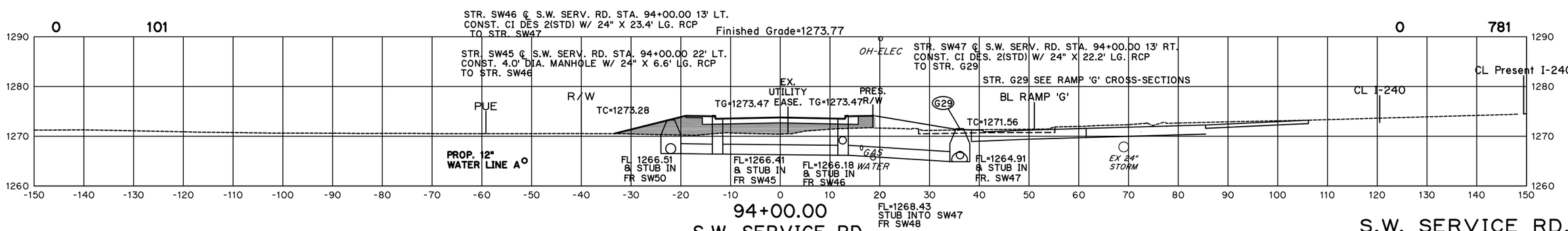

S.W. SERVICE RD.

I-35/I-240 INTERCHANGE

STATE JOB NO. 09032(17)

OKLAHOMA COUNTY SHEET NO. X78

SEPT 13, 2016 - 14:35:60
H:\PROJECTS\2789_CrossRoads_InterX_New\PHASE IA\Roadway\Drawings\XSections\XSEC-CL-SWSERVRD-REV.DWG

Area Cut Fill

(CAUTION) THE LOCATION OF ALL UTILITIES AS SHOWN ARE APPROXIMATE. DUE TO RELOCATION'S PLANNED OR PRESENTLY UNDER CONSTRUCTION THERE ARE SOME UTILITIES THAT WILL BE RELOCATED AND NOT SHOWN ON THESE PLANS. THE CONTRACTOR SHALL BE RESPONSIBLE FOR ANY DAMAGE TO ALL UTILITIES.

DEPTH & LOCATION OF EXISTING UTILITIES SHALL BE FIELD VERIFIED BY THE CONTRACTOR PRIOR TO CONSTRUCTION.

Volume Cut Fill

STA.96+07.51 S.W. SERV. RD.
S= -0.0370/+0.0370 ft./ft.
K= 0.0000000/0.0000000 ft./ft.

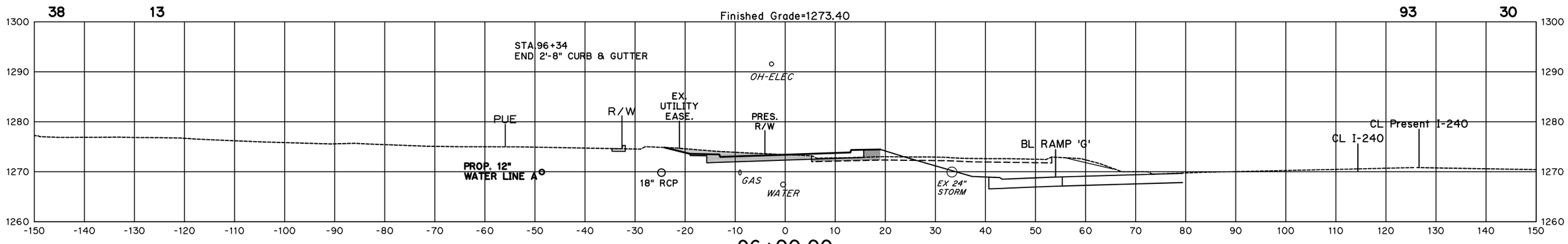

96+00.00

95+98.31 12" WATER MAIN LINE 'X'-ING

95+75.11 O.H. POWER LINE 'X'-ING

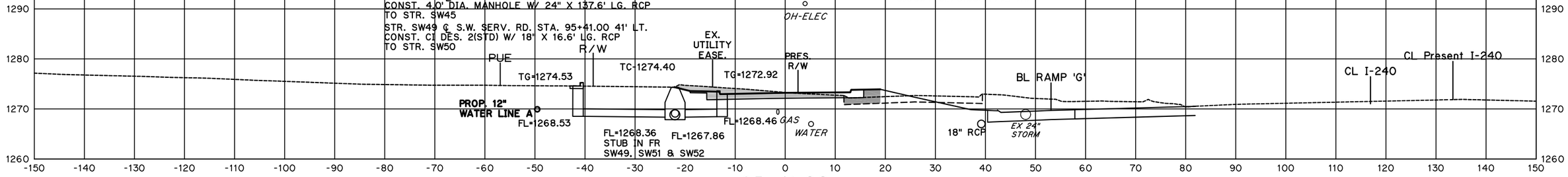

95+41.00

95+29.70 6" C.S. GAS LINE 'X'-ING

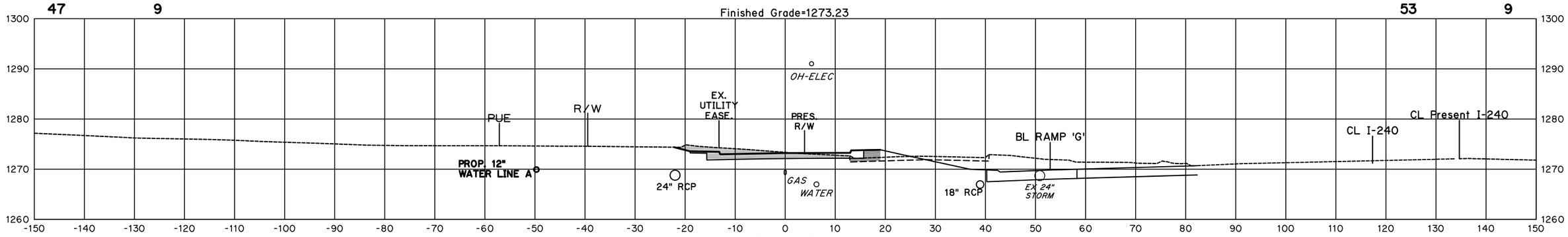

95+29.70

S.W. SERVICE RD.

S.W. SERVICE RD.

I-35/I-240 INTERCHANGE

STATE JOB NO. 09032(17)

OKLAHOMA COUNTY SHEET NO. X79

SEPT 13, 2016 - 14:35:60
H:\PROJECTS\2789_CrossRoads_InterX_New\PHASE IA\Roadway\Drawings\XSections\XSEC-CL-SWSERVRD-REV.DWG

Area	
Cut	Fill

(CAUTION) THE LOCATION OF ALL UTILITIES AS SHOWN ARE APPROXIMATE. DUE TO RELOCATION'S PLANNED OR PRESENTLY UNDER CONSTRUCTION THERE ARE SOME UTILITIES THAT WILL BE RELOCATED AND NOT SHOWN ON THESE PLANS. THE CONTRACTOR SHALL BE RESPONSIBLE FOR ANY DAMAGE TO ALL UTILITIES.

DEPTH & LOCATION OF EXISTING UTILITIES SHALL BE FIELD VERIFIED BY THE CONTRACTOR PRIOR TO CONSTRUCTION.

Volume	
Cut	Fill

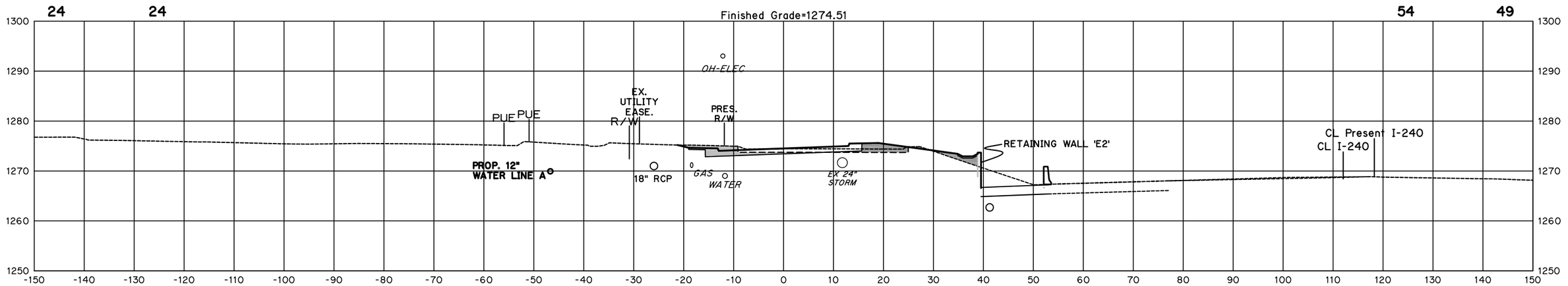

97+00.00

96+49.50 6" C.S. GAS LINE 'X'-ING

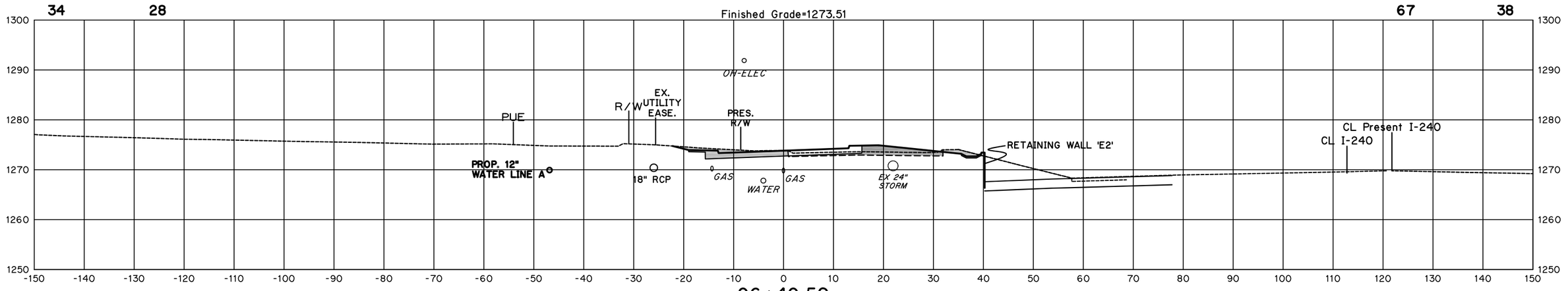

96+49.50

S.W. SERVICE RD.

S.W. SERVICE RD.

I-35/I-240 INTERCHANGE

STATE JOB NO. 09032(17)

OKLAHOMA COUNTY SHEET NO. X80

SEPT 13, 2016 - 14:35:60
H:\PROJECTS\2789_CrossRoads_InterX_New\PHASE IA\Roadway\Drawings\XSections\XSEC-CL-SWSERVRD-REV.DWG

Area	
Cut	Fill

(CAUTION) THE LOCATION OF ALL UTILITIES AS SHOWN ARE APPROXIMATE. DUE TO RELOCATION'S PLANNED OR PRESENTLY UNDER CONSTRUCTION THERE ARE SOME UTILITIES THAT WILL BE RELOCATED AND NOT SHOWN ON THESE PLANS. THE CONTRACTOR SHALL BE RESPONSIBLE FOR ANY DAMAGE TO ALL UTILITIES.

DEPTH & LOCATION OF EXISTING UTILITIES SHALL BE FIELD VERIFIED BY THE CONTRACTOR PRIOR TO CONSTRUCTION.

Volume	
Cut	Fill

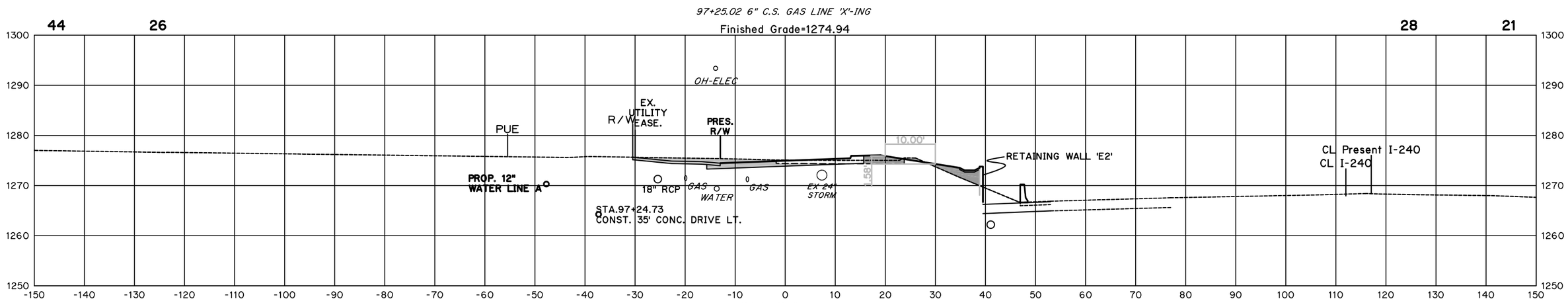

97+24.73

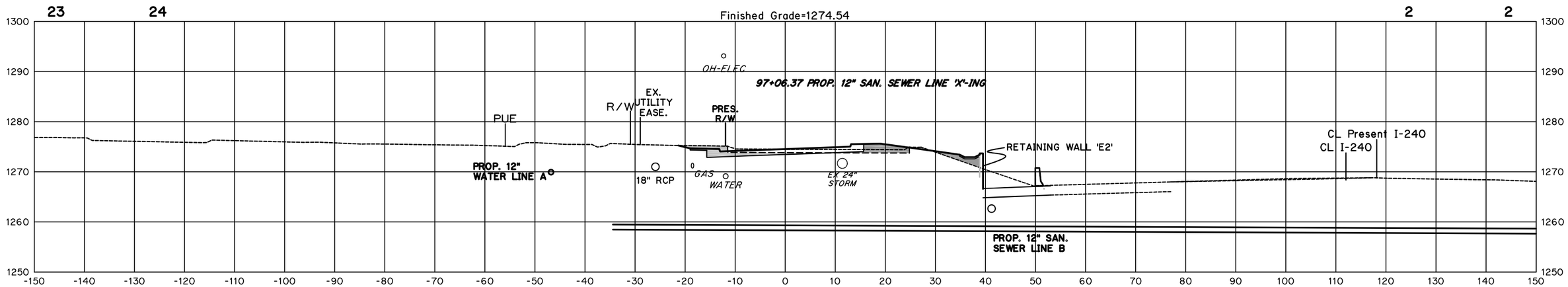

97+01.95

S.W. SERVICE RD.

S.W. SERVICE RD.

I-35/I-240 INTERCHANGE

STATE JOB NO. 09032(17)

OKLAHOMA COUNTY SHEET NO. X81

SEPT 13, 2016 - 14:35:60
H:\PROJECTS\2789_CrossRoads_InterX_New\PHASE IA\Roadway\Drawings\XSections\XSEC-CL-SWSERVRD-REV.DWG

Area	
Cut	Fill

(CAUTION) THE LOCATION OF ALL UTILITIES AS SHOWN ARE APPROXIMATE. DUE TO RELOCATION'S PLANNED OR PRESENTLY UNDER CONSTRUCTION THERE ARE SOME UTILITIES THAT WILL BE RELOCATED AND NOT SHOWN ON THESE PLANS. THE CONTRACTOR SHALL BE RESPONSIBLE FOR ANY DAMAGE TO ALL UTILITIES.

DEPTH & LOCATION OF EXISTING UTILITIES SHALL BE FIELD VERIFIED BY THE CONTRACTOR PRIOR TO CONSTRUCTION.

Volume	
Cut	Fill

STA.99+21.58 S.W. SERV. RD.
S= -0.0200/0.0000 ft./ft.
K= 0.0000000/0.0004462 ft./ft.

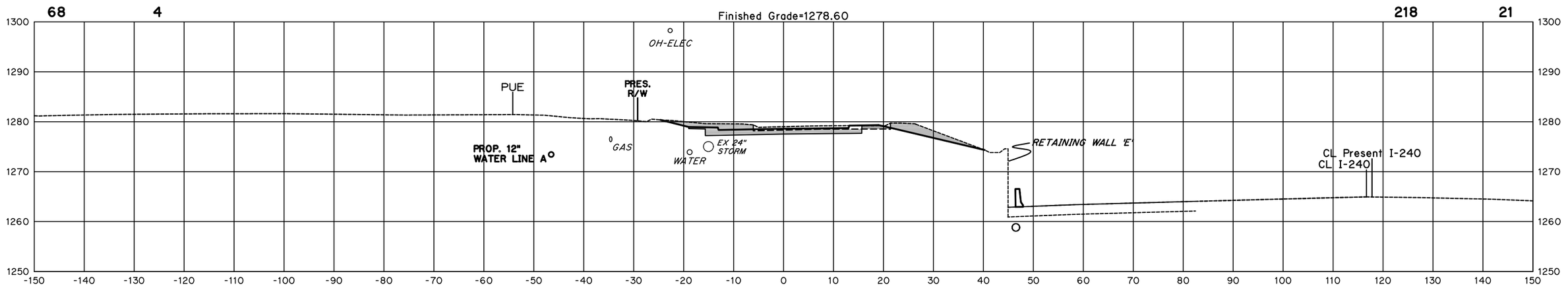

99+00.00

STA.98+76.75 S.W. SERV. RD.
S= -0.0200/+0.0200 ft./ft.
K= 0.0000000/0.0004462 ft./ft.

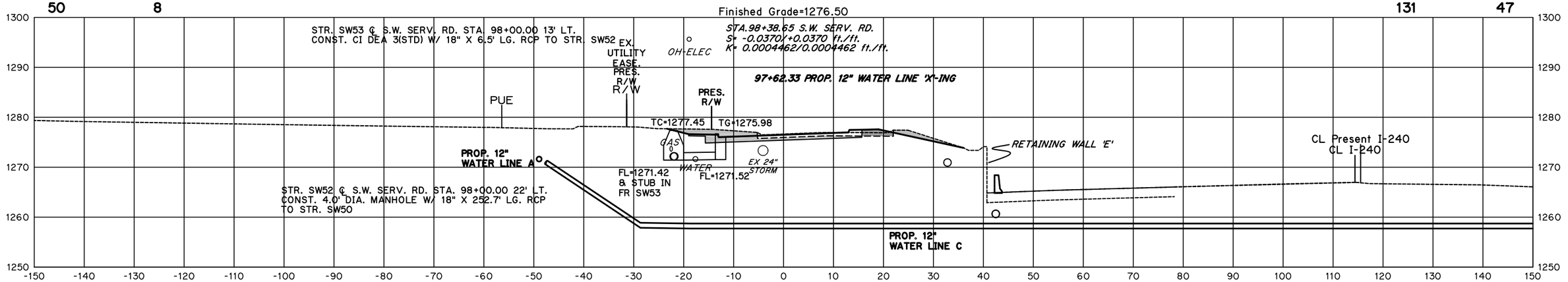

98+00.00

S.W. SERVICE RD.

I-35/I-240 INTERCHANGE

S.W. SERVICE RD.

STATE JOB NO. 09032(17)

OKLAHOMA COUNTY SHEET NO. X82

SEPT 13, 2016 - 14:35:60
H:\PROJECTS\2789_CrossRoads_InterX_New\PHASE IA\Roadway\Drawings\XSections\XSEC-CL-SWSERVRD-REV.DWG

Area	
Cut	Fill

(CAUTION) THE LOCATION OF ALL UTILITIES AS SHOWN ARE APPROXIMATE. DUE TO RELOCATION'S PLANNED OR PRESENTLY UNDER CONSTRUCTION THERE ARE SOME UTILITIES THAT WILL BE RELOCATED AND NOT SHOWN ON THESE PLANS. THE CONTRACTOR SHALL BE RESPONSIBLE FOR ANY DAMAGE TO ALL UTILITIES.

DEPTH & LOCATION OF EXISTING UTILITIES SHALL BE FIELD VERIFIED BY THE CONTRACTOR PRIOR TO CONSTRUCTION.

Volume	
Cut	Fill

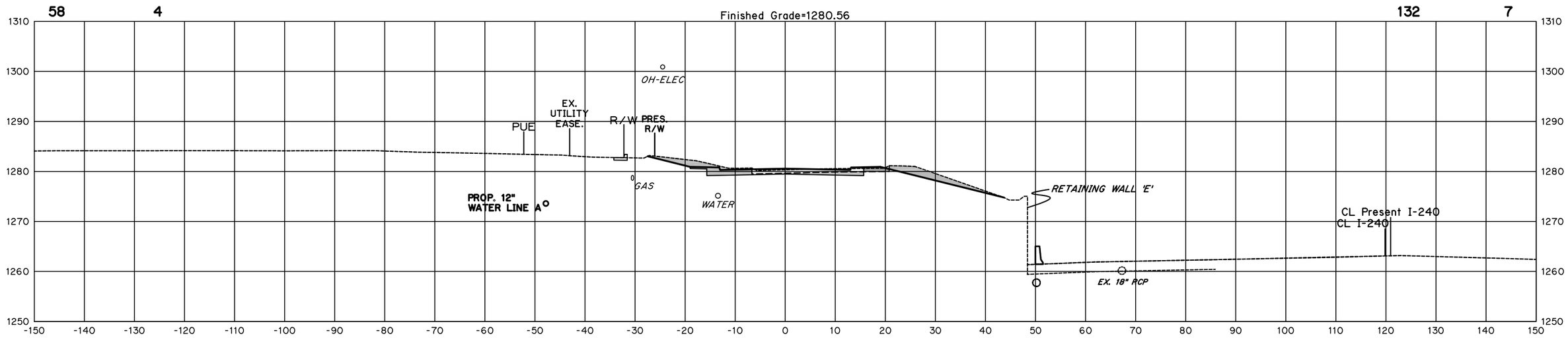

100+00.00

STA.99+84.26
BEGIN 2'-8" CURB & GUTTER

STA.99+66.41 S.W. SERV. RD.
S= -0.0200/-0.0200 ft./ft.
K= 0.0000000/0.0000000 ft./ft.

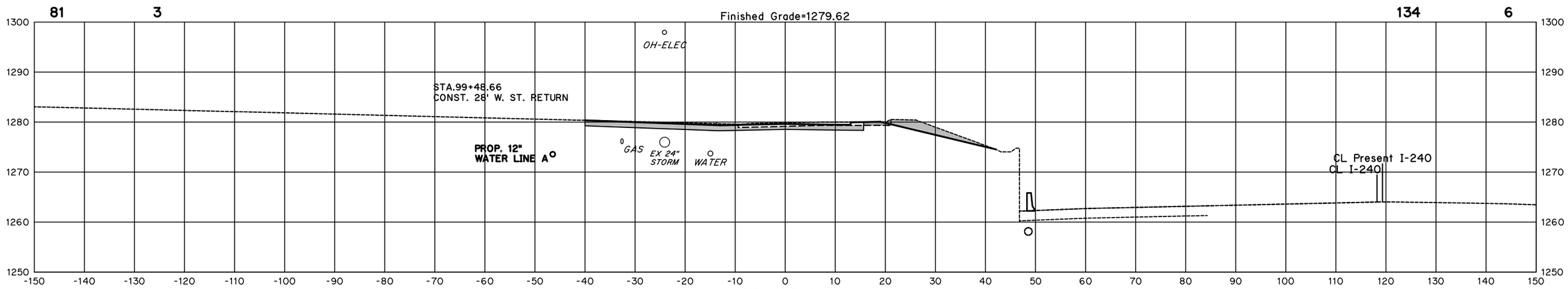

99+48.66
S.W. SERVICE RD.

S.W. SERVICE RD.

I-35/I-240 INTERCHANGE

STATE JOB NO. 09032(17)
OKLAHOMA COUNTY SHEET NO. X83

SEPT 13, 2016 - 14:35:60
H:\PROJECTS\2789_CrossRoads_InterX_New\PHASE IA\Roadway\Drawings\XSections\XSEC-CL-SWSERVRD-REV.DWG

Area	
Cut	Fill

(CAUTION) THE LOCATION OF ALL UTILITIES AS SHOWN ARE APPROXIMATE. DUE TO RELOCATION'S PLANNED OR PRESENTLY UNDER CONSTRUCTION THERE ARE SOME UTILITIES THAT WILL BE RELOCATED AND NOT SHOWN ON THESE PLANS. THE CONTRACTOR SHALL BE RESPONSIBLE FOR ANY DAMAGE TO ALL UTILITIES.

DEPTH & LOCATION OF EXISTING UTILITIES SHALL BE FIELD VERIFIED BY THE CONTRACTOR PRIOR TO CONSTRUCTION.

Volume	
Cut	Fill

68 4

Finished Grade=1281.50

234 14

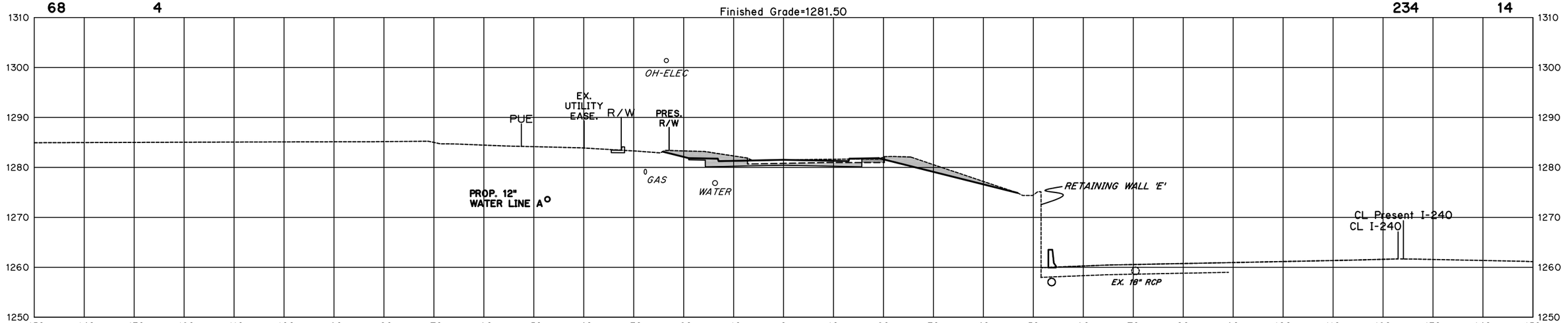

101+00.00

74 5

Finished Grade=1281.73

28 2

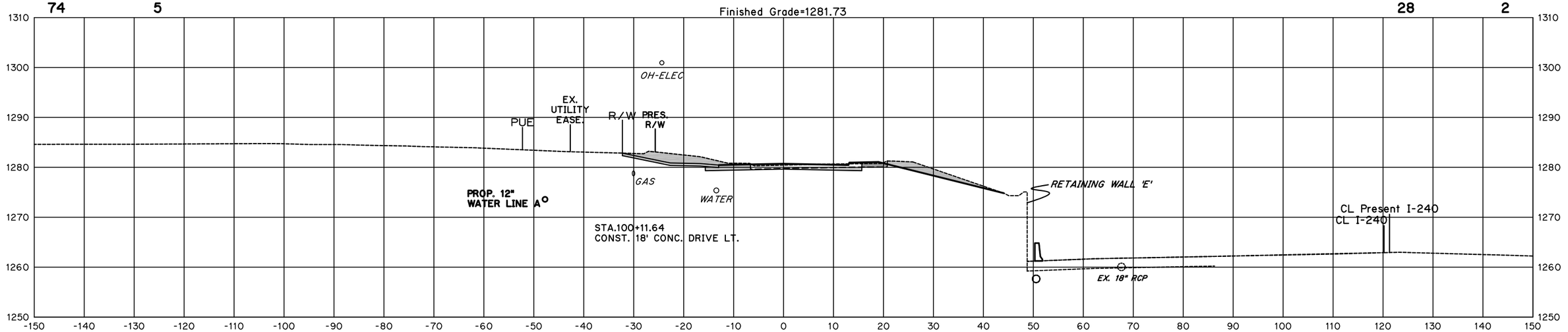

100+11.64

S.W. SERVICE RD.

S.W. SERVICE RD.

I-35/I-240 INTERCHANGE

STATE JOB NO. 09032(17)

OKLAHOMA COUNTY SHEET NO. X84

SEPT 13, 2016 - 14:35:60
H:\PROJECTS\2789_CrossRoads_InterX_New\PHASE IA\Roadway\Drawings\XSections\XSEC-CL-SWSERVRD-REV.DWG

Area		Volume	
Cut	Fill	Cut	Fill

(CAUTION) THE LOCATION OF ALL UTILITIES AS SHOWN ARE APPROXIMATE. DUE TO RELOCATION'S PLANNED OR PRESENTLY UNDER CONSTRUCTION THERE ARE SOME UTILITIES THAT WILL BE RELOCATED AND NOT SHOWN ON THESE PLANS. THE CONTRACTOR SHALL BE RESPONSIBLE FOR ANY DAMAGE TO ALL UTILITIES.

DEPTH & LOCATION OF EXISTING UTILITIES SHALL BE FIELD VERIFIED BY THE CONTRACTOR PRIOR TO CONSTRUCTION.

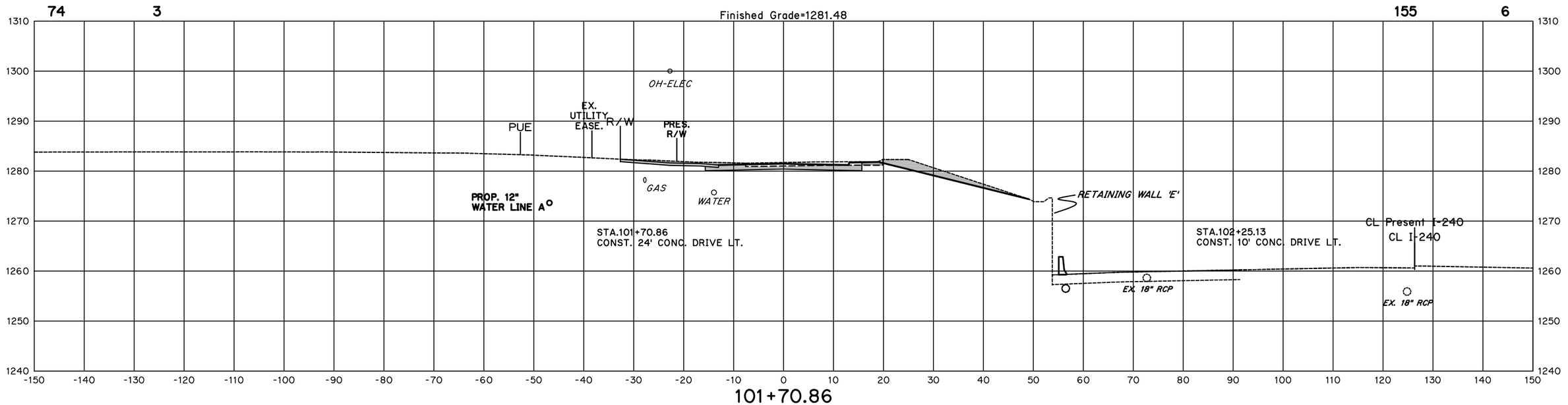

101+70.86

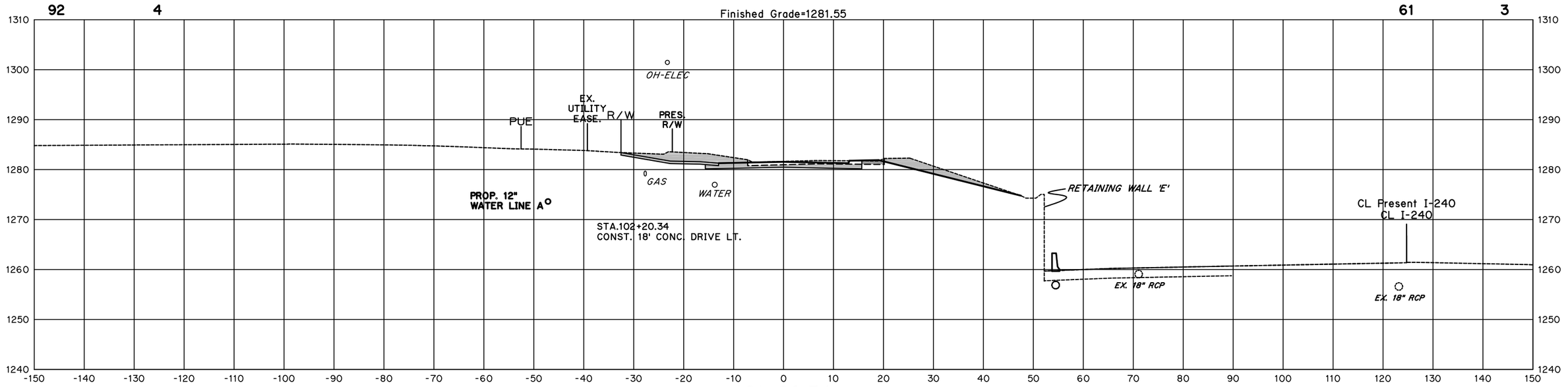

101+20.34

S.W. SERVICE RD.

S.W. SERVICE RD.

I-35/I-240 INTERCHANGE

STATE JOB NO. 09032(17)

OKLAHOMA COUNTY SHEET NO. X85

SEPT 13, 2016 - 14:35:60
H:\PROJECTS\2789_CrossRoads_InterX_New\PHASE IA\Roadway\Drawings\XSections\XSEC-CL-SWSERVRD-REV.DWG

(CAUTION) THE LOCATION OF ALL UTILITIES AS SHOWN ARE APPROXIMATE. DUE TO RELOCATION'S PLANNED OR PRESENTLY UNDER CONSTRUCTION THERE ARE SOME UTILITIES THAT WILL BE RELOCATED AND NOT SHOWN ON THESE PLANS. THE CONTRACTOR SHALL BE RESPONSIBLE FOR ANY DAMAGE TO ALL UTILITIES.

DEPTH & LOCATION OF EXISTING UTILITIES SHALL BE FIELD VERIFIED BY THE CONTRACTOR PRIOR TO CONSTRUCTION.

Area		Volume	
Cut	Fill	Cut	Fill
75	3	65	3

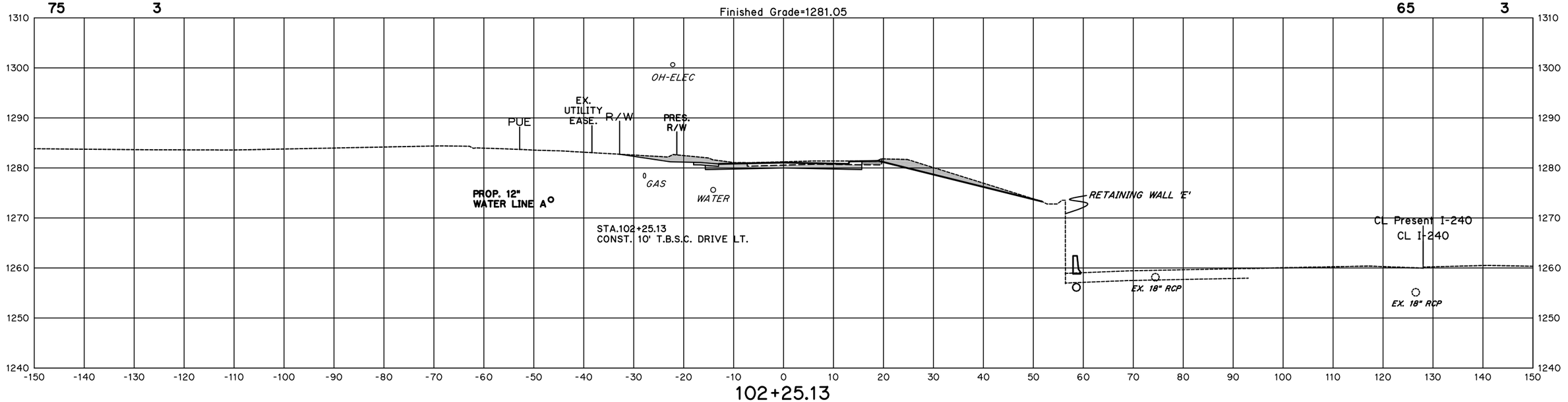

102+25.13

66	3	76	3

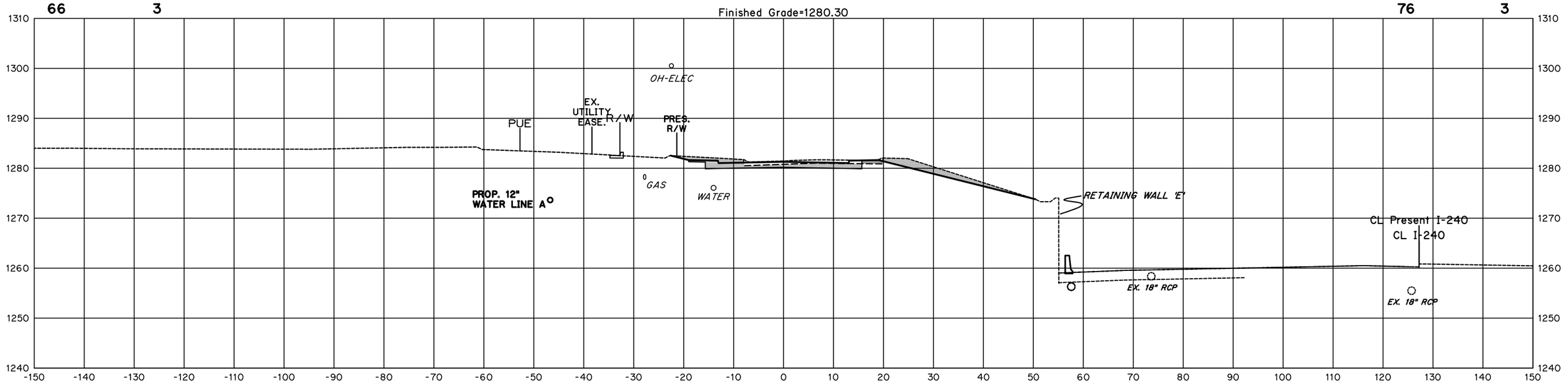

102+00.00

S.W. SERVICE RD.

S.W. SERVICE RD.

I-35/I-240 INTERCHANGE

STATE JOB NO. 09032(17)

OKLAHOMA COUNTY SHEET NO. X86

SEPT 13, 2016 - 14:35:60
H:\PROJECTS\2789_CrossRoads_InterX_New\PHASE IA\Roadway\Drawings\XSections\XSEC-CL-SWSERVRD-REV.DWG

Area
Cut Fill

(CAUTION) THE LOCATION OF ALL UTILITIES AS SHOWN ARE APPROXIMATE. DUE TO RELOCATION'S PLANNED OR PRESENTLY UNDER CONSTRUCTION THERE ARE SOME UTILITIES THAT WILL BE RELOCATED AND NOT SHOWN ON THESE PLANS. THE CONTRACTOR SHALL BE RESPONSIBLE FOR ANY DAMAGE TO ALL UTILITIES.

DEPTH & LOCATION OF EXISTING UTILITIES SHALL BE FIELD VERIFIED BY THE CONTRACTOR PRIOR TO CONSTRUCTION.

Volume
Cut Fill

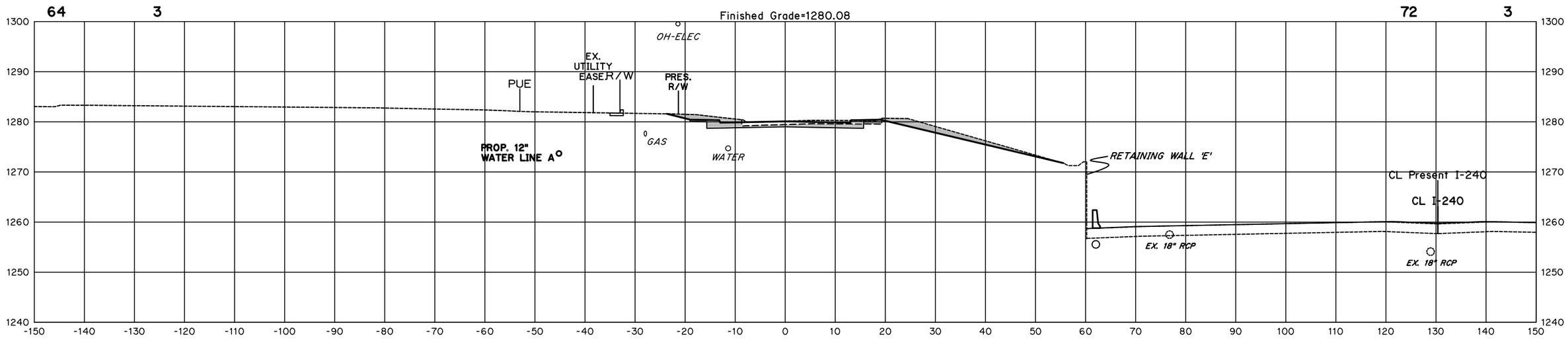

103+00.00

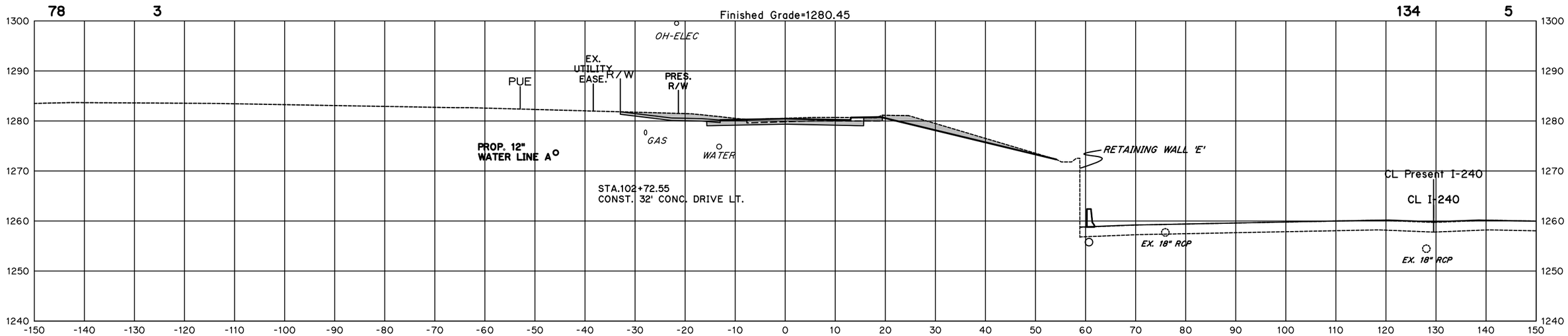

102+72.55

S.W. SERVICE RD.

S.W. SERVICE RD.

I-35/I-240 INTERCHANGE

STATE JOB NO. 09032(17)

OKLAHOMA COUNTY SHEET NO. X87

SEPT 13, 2016 - 14:35:60
H:\PROJECTS\2789_CrossRoads_InterX_New\PHASE IA\Roadway\Drawings\XSections\XSEC-CL-SWSERVRD-REV.DWG

Area
Cut **Fill**

(CAUTION) THE LOCATION OF ALL UTILITIES AS SHOWN ARE APPROXIMATE. DUE TO RELOCATION'S PLANNED OR PRESENTLY UNDER CONSTRUCTION THERE ARE SOME UTILITIES THAT WILL BE RELOCATED AND NOT SHOWN ON THESE PLANS. THE CONTRACTOR SHALL BE RESPONSIBLE FOR ANY DAMAGE TO ALL UTILITIES.

DEPTH & LOCATION OF EXISTING UTILITIES SHALL BE FIELD VERIFIED BY THE CONTRACTOR PRIOR TO CONSTRUCTION.

Volume
Cut **Fill**

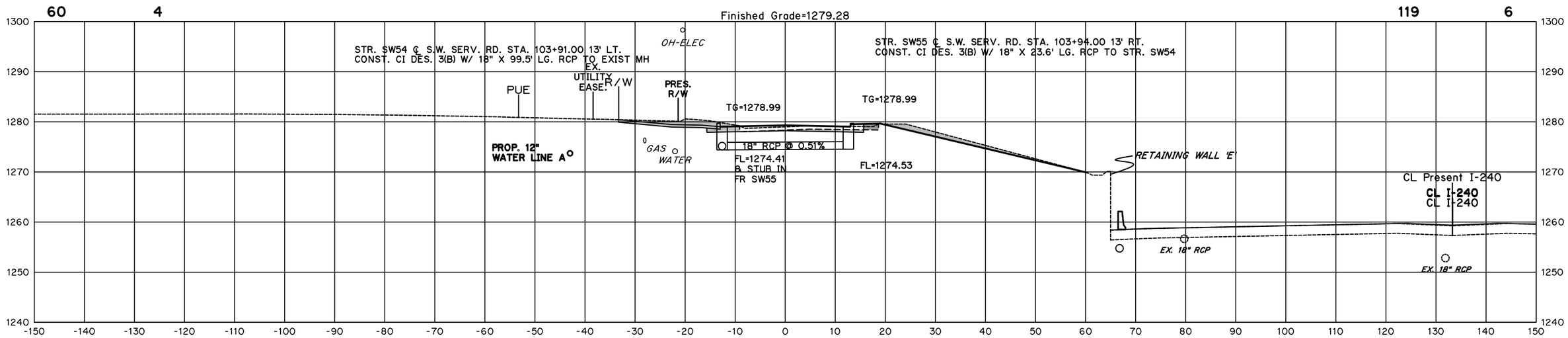

103+92.50

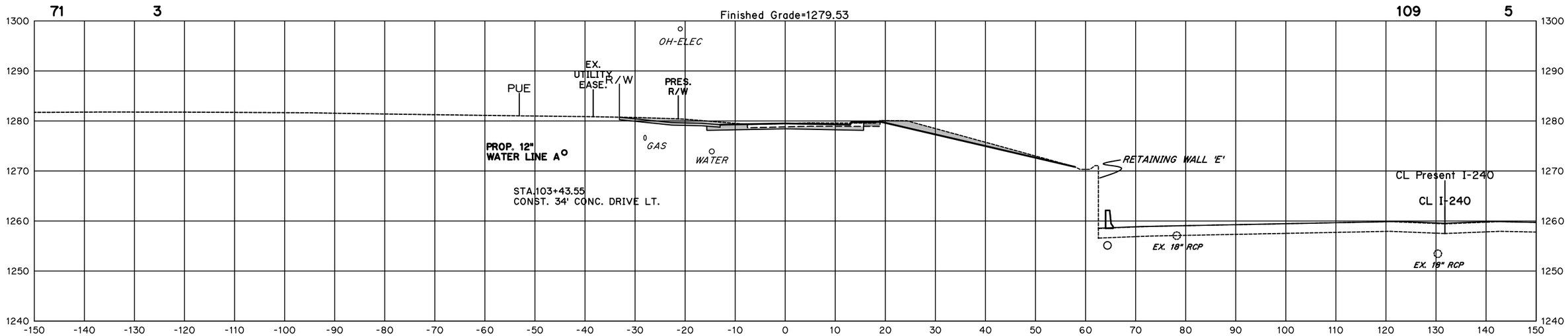

103+43.55

S.W. SERVICE RD.

S.W. SERVICE RD.

I-35/I-240 INTERCHANGE

STATE JOB NO. 09032(17)

OKLAHOMA COUNTY SHEET NO. X88

SEPT 13, 2016 - 14:35:60
H:\PROJECTS\2789_CrossRoads_InterX_New\PHASE IA\Roadway\Drawings\XSections\XSEC-CL-SWSERVRD-REV.DWG

Area Cut Fill

(CAUTION) THE LOCATION OF ALL UTILITIES AS SHOWN ARE APPROXIMATE. DUE TO RELOCATION'S PLANNED OR PRESENTLY UNDER CONSTRUCTION THERE ARE SOME UTILITIES THAT WILL BE RELOCATED AND NOT SHOWN ON THESE PLANS. THE CONTRACTOR SHALL BE RESPONSIBLE FOR ANY DAMAGE TO ALL UTILITIES.

DEPTH & LOCATION OF EXISTING UTILITIES SHALL BE FIELD VERIFIED BY THE CONTRACTOR PRIOR TO CONSTRUCTION.

Volume Cut Fill

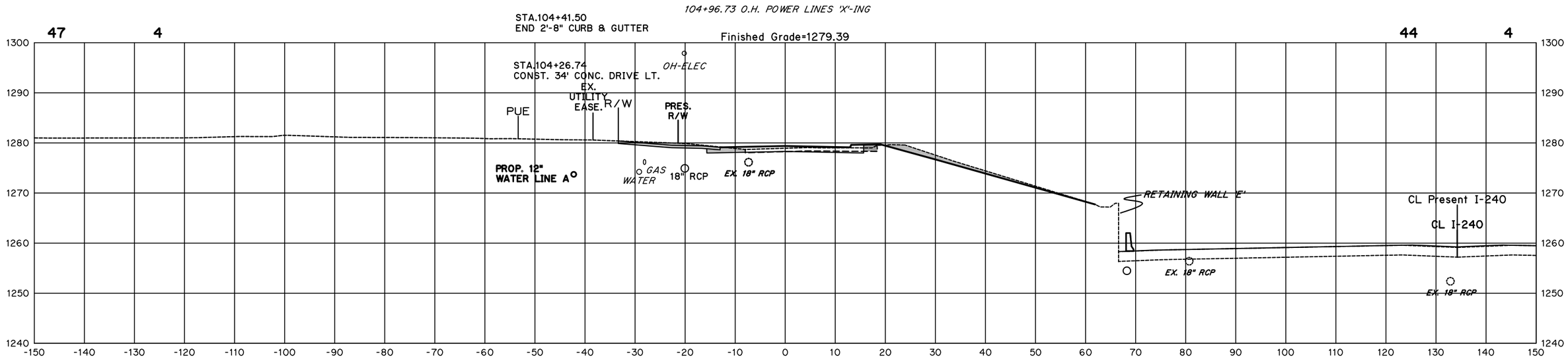

104+26.74

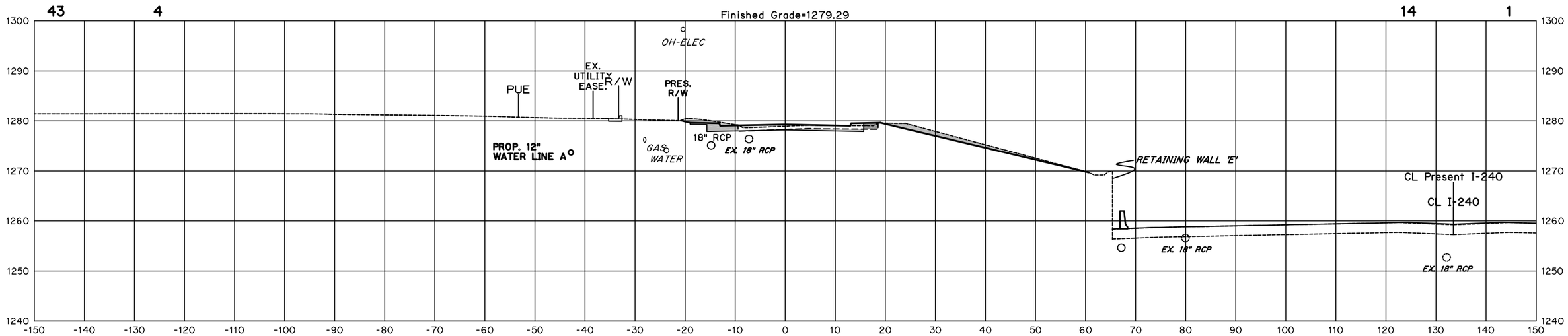

104+00.00

S.W. SERVICE RD.

S.W. SERVICE RD.

I-35/I-240 INTERCHANGE

STATE JOB NO. 09032(17)

OKLAHOMA COUNTY SHEET NO. X89

SEPT 13, 2016 - 14:35:60
H:\PROJECTS\2789_CrossRoads_InterX_New\PHASE IA\Roadway\Drawings\XSections\XSEC-CL-SWSERVRD-REV.DWG

Area

Cut **Fill**

(CAUTION) THE LOCATION OF ALL UTILITIES AS SHOWN ARE APPROXIMATE. DUE TO RELOCATION'S PLANNED OR PRESENTLY UNDER CONSTRUCTION THERE ARE SOME UTILITIES THAT WILL BE RELOCATED AND NOT SHOWN ON THESE PLANS. THE CONTRACTOR SHALL BE RESPONSIBLE FOR ANY DAMAGE TO ALL UTILITIES.

DEPTH & LOCATION OF EXISTING UTILITIES SHALL BE FIELD VERIFIED BY THE CONTRACTOR PRIOR TO CONSTRUCTION.

Volume

Cut **Fill**

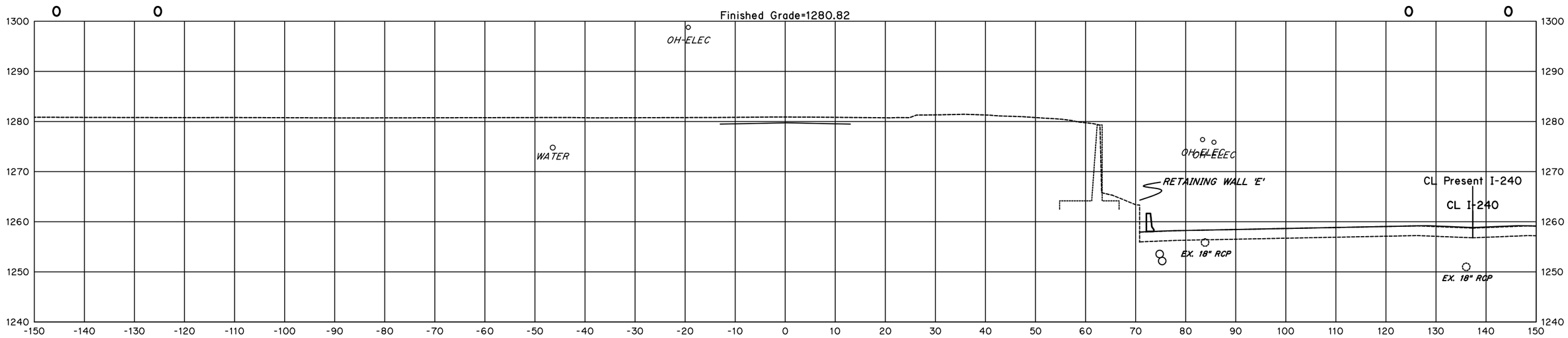

105+22.20

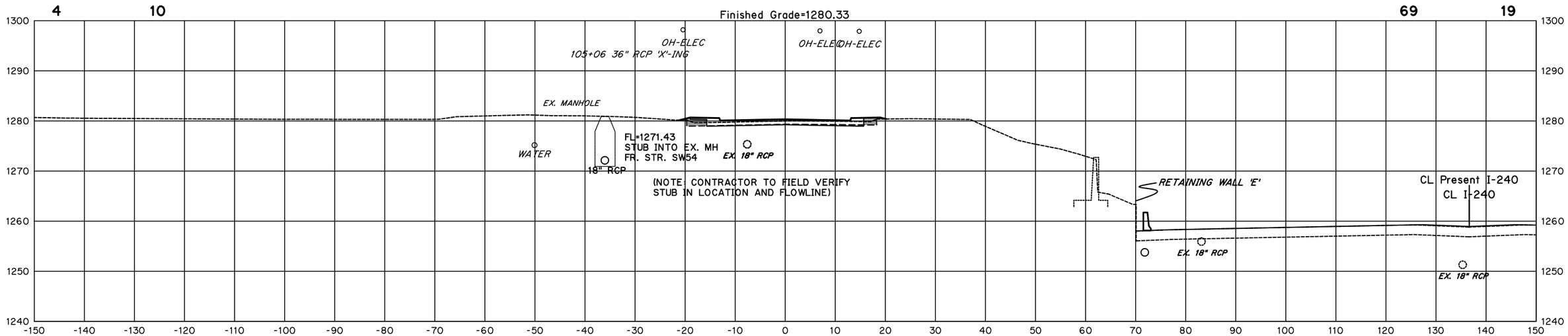

105+00.00

S.W. SERVICE RD.

S.W. SERVICE RD.

I-35/I-240 INTERCHANGE

STATE JOB NO. 09032(17)

OKLAHOMA COUNTY SHEET NO. X90

SEPT 13, 2016 - 14:35:60
H:\PROJECTS\2789_CrossRoads_InterX_New\PHASE IA\Roadway\Drawings\XSections\XSEC-CL-SWSERVRD-REV.DWG

(CAUTION) THE LOCATION OF ALL UTILITIES AS SHOWN ARE APPROXIMATE. DUE TO RELOCATION'S PLANNED OR PRESENTLY UNDER CONSTRUCTION THERE ARE SOME UTILITIES THAT WILL BE RELOCATED AND NOT SHOWN ON THESE PLANS. THE CONTRACTOR SHALL BE RESPONSIBLE FOR ANY DAMAGE TO ALL UTILITIES.

DEPTH & LOCATION OF EXISTING UTILITIES SHALL BE FIELD VERIFIED BY THE CONTRACTOR PRIOR TO CONSTRUCTION.

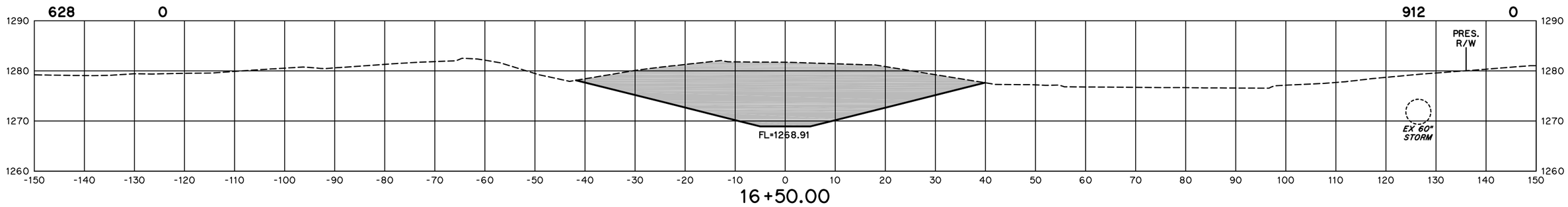

16+50.00

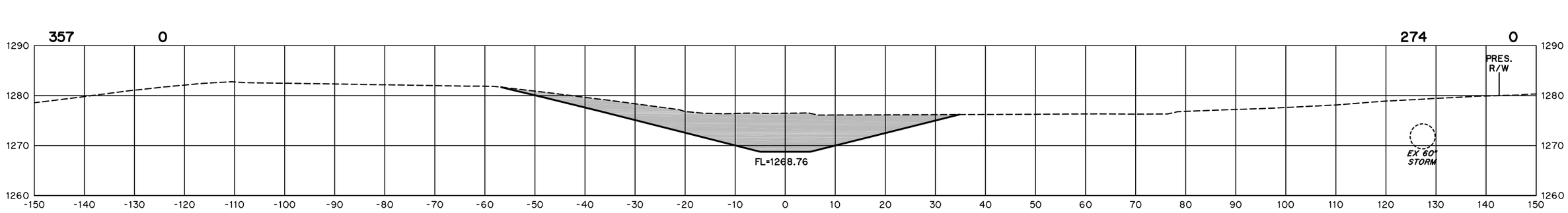

16+00.00

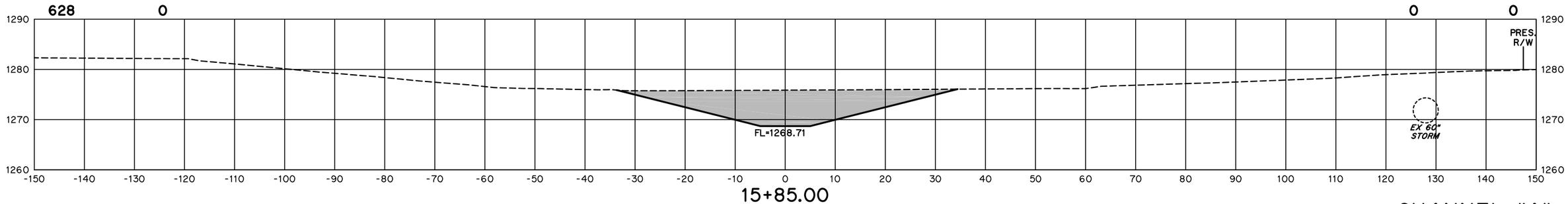

15+85.00

CHANNEL "A"

CHANNEL "A"

I-35/I-240 INTERCHANGE

STATE JOB NO. 09032(17)

OKLAHOMA COUNTY SHEET NO. X91

SEPT 13, 2016 - 14:11:10
H:\PROJECTS\2789_CrossRoads_InterX_New\PHASE IA\Roadway\Drawings\XSections\XSEC-CL CHANNEL A-REV.DWG

(CAUTION) THE LOCATION OF ALL UTILITIES AS SHOWN ARE APPROXIMATE. DUE TO RELOCATION'S PLANNED OR PRESENTLY UNDER CONSTRUCTION THERE ARE SOME UTILITIES THAT WILL BE RELOCATED AND NOT SHOWN ON THESE PLANS. THE CONTRACTOR SHALL BE RESPONSIBLE FOR ANY DAMAGE TO ALL UTILITIES.

DEPTH & LOCATION OF EXISTING UTILITIES SHALL BE FIELD VERIFIED BY THE CONTRACTOR PRIOR TO CONSTRUCTION.

Area		Volume	
Cut	Fill	Cut	Fill
183	1	418	59

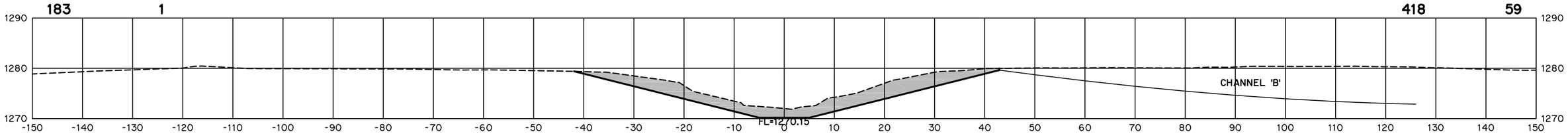

18+70.00

Area		Volume	
Cut	Fill	Cut	Fill
139	45	1101	268

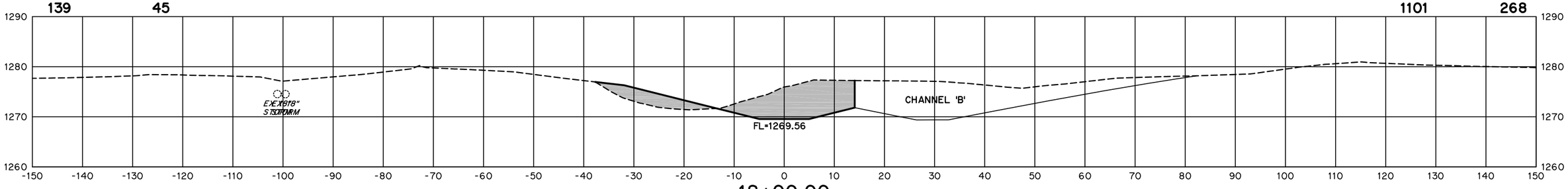

18+00.00

Area		Volume	
Cut	Fill	Cut	Fill
455	100	1003	93

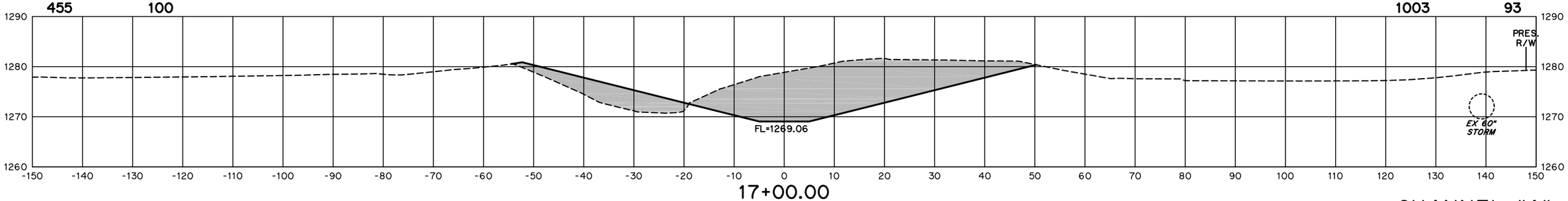

17+00.00

CHANNEL "A"

CHANNEL "A"

I-35/I-240 INTERCHANGE

STATE JOB NO. 09032(17)

OKLAHOMA COUNTY SHEET NO. X92

SEPT 13, 2016 - 16:05:38
H:\PROJECTS\2789_CrossRoads_InterX_New\PHASE IA\Roadway\Drawings\XSections\XSEC-CL CHANNEL A-REV.DWG